# PARTS CATALOGUE FOR

# COMPUTERIZED SEWING MACHINE

# NV4000D
# NV4000

08.2004.

# CONTENTS

(1) PRINCIPAL PARTS ..... 2

LCD SUPPLY ASSEMBLY ..... 6

(2) UPPER SHAFT / NEEDLE BAR, PRESSER MECHANISM ..... 8

(3) FEED, ROTARY HOOK / SIDE FEED / THREAD CUTTING MECHANISM ..... 10

(4) ROTARY HOOK DRIVE / BOBBIN WINDER MECHANISM ..... 12

(5) THREAD GUIDE MECHANISM / THREAD HOOK MECHANISM ..... 14

(6) ELECTRONIC PARTS / MOTOR UNIT ..... 18

(7) EMBROIDERY UNIT ..... 20

(8) ATTACHMENTS / PACKING MATERIALS / PRINTED MATTER ..... 24

NEEDLE-PRESSER MODULE ..... 28

FEED MODULE ..... 32

THREAD CUTTER MODULE ..... 36

# (1) PRINCIPAL PARTS

| No. | CODE | NAME | REMARKS |
|---|---|---|---|
| 1 | XC7683051 | REAR COVER | |
| 2 | 087411016 | TAPTITE CUP B M4X10 | |
| 3 | 087411416 | TAPTITE CUP B M4X14 | |
| 4 | XC7717051 | PLATE A | |
| 5 | XC7718051 | PLATE B | |
| 6 | XC7719151 | FACE PLATE ASSY | |
| 7 | X80321001 | NT LOWER THREAD CUTTER | |
| 8 | 138384051 | RETAINING RING,CS5 | |
| 9 | 0A6401206 | SCREW, PAN(T WASHER)M4X12 | 040168 |
| 10 | XC7685051 | FRONT COVER | |
| 11 | XC7723051 | SS BUTTON | |
| 12 | XC7724051 | BUTTON | |
| 13 | XC7726051 | THREAD BUTTON | |
| 14 | XC8196051 | ASSY:THSW PCB D6 | |
| 15 | XC7728051 | SV KEYTOP | |
| 16 | XC7729051 | SV JOINT PLATE | |
| 17 | XC8199051 | ASSY:SS PCB D6 | |
| 18 | XC8202051 | ASSY:VR PCB D6 | |
| 19 | XC7981051 | PCB UNIT:LED LAMP-D6R | |
| 20 | 085311415 | TAPTITE BIND B M3X14 | |
| 21 | 136681051 | TAPTITE, BIND B M3X8 | |
| 22 | X59629051 | TAPTITE,BIND B M3X10 | |
| 23 | XC7838051 | PLATE C | |
| 24 | XC7839051 | PLATE D | |
| 25 | X53169050 | BAND | |
| 26 | 137947001 | CLIP | |
| 27 | 087411016 | TAPTITE CUP B M4X10 | |
| 28 | XC8680050 | S HOLDER | |
| 29 | XC4433051 | SCREW,PAN(T WASHER)M3X6 | |
| 30 | 060400816 | SCREW BIND M4X8 | DEL 040206 |
| 31 | XC8478250 | INVERTER COVER | 040228 |
| 32 | XA9400151 | CONNECT COVER | |
| 33 | 146200051 | RETAINING RING, CS4 | |
| 34 | XC7686051 | HANDLE | |
| 35 | XC7731051 | HANDLE HOLDER L ASSY | |
| 36 | XC7733051 | HANDLE HOLDER R ASSY | |
| 37 | 048040346 | RETAINING RING E4 | |
| 38 | XC7736051 | BASE PLATE | |
| 39 | XA1805051 | BASE RUBBER A | |
| 40 | XA4687051 | ADJUSTING SCREW ASSY | |
| 41 | XA9386051 | BASE PLATE RUBBER | |
| 42 | XA9387050 | BASE PLATE RUBBER | |
| 43 | XC7737051 | KNEE LIFTER ASSEMBLY | |
| 44 | XC7738051 | LIFTER BASE | |

| No. | CODE | NAME | REMARKS |
|---|---|---|---|
| 45 | XC7739051 | SHAFT | |
| 46 | XA6215151 | SPRING,PLATE | |
| 47 | 060260316 | SCREW BIND M2.6X3 | |
| 48 | X51383050 | WASHER,THRUST | |
| 49 | XC7740051 | LIFTER LINK | |
| 50 | XA6252051 | SCREW | |
| 51 | 028040242 | WASHER SPRING 2-4 | |
| 52 | 026040236 | WASHER PLAIN M 4 | |
| 53 | XC7741051 | SPRING | |
| 54 | XC8208051 | ASSY:KNEE LIFTER SENSOR | |
| 55 | XA6493051 | PT LEVER | |
| 56 | 012300632 | SET SCREW SOCKET (FT) M3X6 | |
| 57 | XC7742051 | SPRING | |
| 58 | 026060235 | WASHER PLAIN M 6 | |
| 59 | X52569001 | NUT | |
| 60 | XC7743051 | STOPPER PLATE ASSY | |
| 61 | 0A5400806 | SCREW PAN (S/P WASHER) M4X8 | |
| 62 | XC8624051 | KNEE LIFTER SPRING | |
| 63 | XC8573051 | WASHER,WAVE SPRING | |
| 64 | 060400616 | SCREW BIND M4X6 | |
| 65 | XC8210051 | ASSY,MAIN BODY LEAD WIRE | |
| 66 | 048030346 | RETAINING RING E3 | |
| 67 | XC7746051 | CONNECTOR HOLDER ASSY | |
| 68 | XC7632051 | INLET ASSY:D6 US (U.S.A., CANADA) | |
| | XC8419051 | INLET ASSY:D6 EU | |
| 69 | XC8902051 | FERRITE CORE:E04SR200935A (U.S.A., CANADA) | |
| 70 | 060400616 | SCREW BIND M4X6 | |
| 71 | X57908051 | TAPTITE,BIND S M4X10 | |
| 72 | XC7687051 | ACCESSORY TABLE | |
| 73 | XC7688051 | ACCESSORY TABLE FRONT COVER | |
| 74 | XC7689051 | ACCESSORY TABLE REAR COVER | |
| 75 | 138644051 | NOTCHED SPRING | |
| 76 | XC7750051 | CASE ASSEMBLY | |
| 77 | XC8184050 | UNDER CASE POLYSTYRENE L | |
| 78 | XC8183050 | UNDER CASE POLYSTYRENE R | |
| 79 | XA3028052 | DECORATION PLATE | |
| 80 | XC8378051 | CASE COVER | |
| 81 | XC8613051 | BAG.900X600H | |
| 82 | 125440050 | CASE FELT | |
| 83 | XC2364052 | NEEDLE PLATE B ASSY | |
| 84 | XC2365052 | NEEDLE PLATE B | |
| 85 | XC2366152 | SLIDE BUTTON | |
| 86 | XC2367052 | CUTTER COVER | |

# (1) PRINCIPAL PARTS

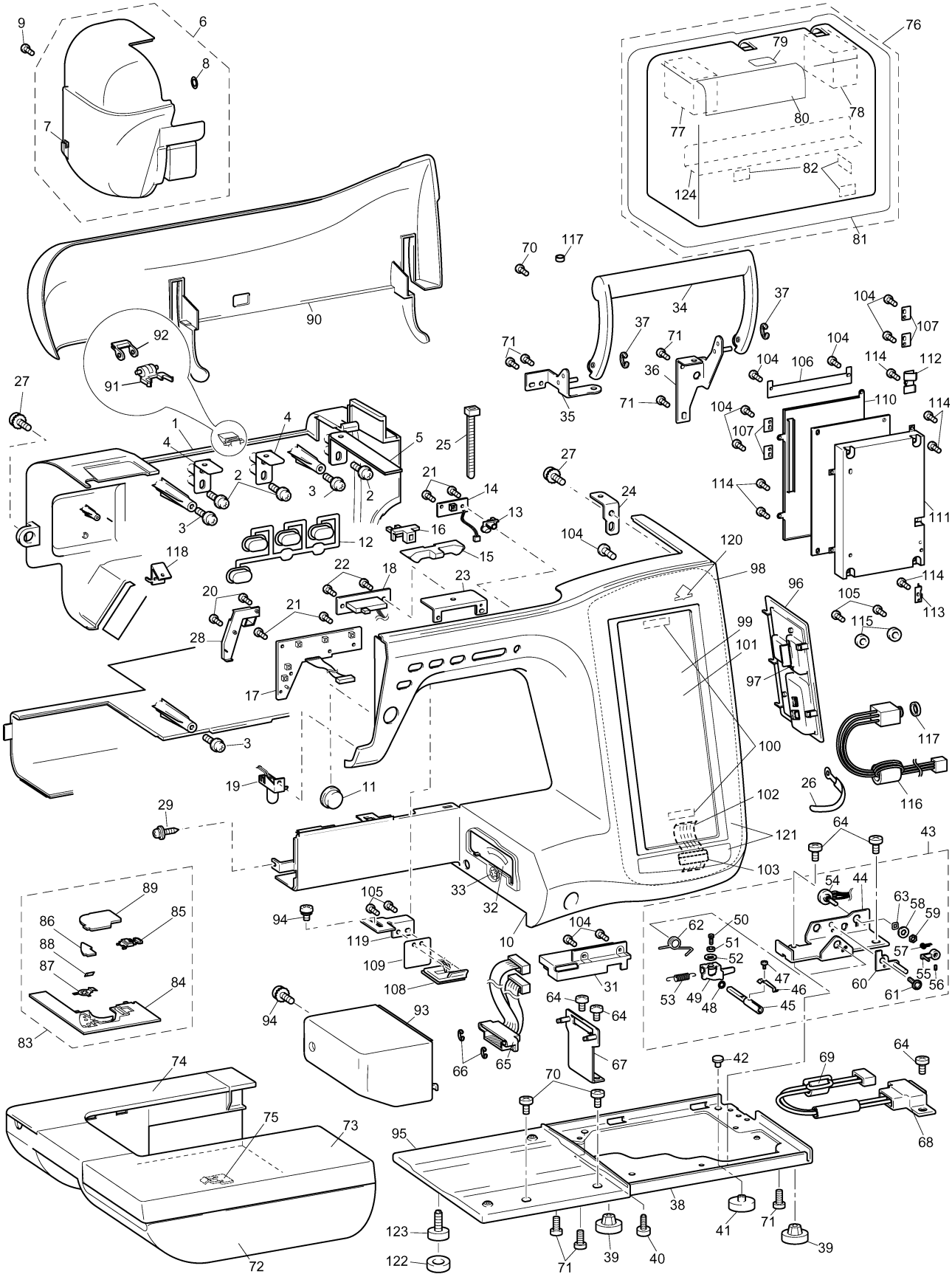

# (1) PRINCIPAL PARTS

| No. | CODE | NAME | REMARKS |
|---|---|---|---|
| 87 | XC2368051 | SPRING PLATE | |
| 88 | X80321001 | NT LOWER THREAD CUTTER | |
| 89 | XC2369051 | NEEDLE PLATE COVER | |
| 90 | XC7690053 | TOP COVER | |
| 91 | XZ0391051 | UPPER COVER HOLDER | |
| 92 | XC3286001 | UPPER COVER HINGE OEM | |
| 93 | XC7691051 | FREE ARM COVER | |
| 94 | 0A6400806 | SCREW PAN (T WASHER) M4X8 | |
| 95 | XC7692051 | BASE PLATE COVER | |
| 96 | XC7693051 | CARD PCB COVER | |
| 97 | XC7756051 | PEN HOLDER | |
| 98 | XC8669251 | LCD MODULE SUPPLY ASSY (NV4000D: U.S.A.) | 040199 |
| | XC8684151 | LCD MODULE SUPPLY ASSY (NV4000D) | |
| | | Including #99,100,101,104,106,107,121 | See Next |
| 99 | XC8211051 | TOUCH PANEL D6 | |
| 100 | XA6039051 | FRONT COVER SPACER B | |
| 101 | XC8891151 | LCD SUPPLY ASSY (U.S.A., CANADA) | |
| | XC8892151 | LCD SUPPLY ASSY | |
| 102 | XC6193051 | FFC:SML2CD-LCD | |
| 103 | XC8660051 | FERRITE CORE:FS18X12X5 | |
| 104 | 136681051 | TAPTITE, BIND B M3X8 | |
| 105 | X59629051 | TAPTITE,BIND B M3X10 | |
| 106 | XC7840051 | LCD PRESSER A | |
| 107 | XC7850051 | LCD PRESSER B | |
| 108 | XC7757051 | PCB UNIT:LED LAMP-3 | |
| 109 | XC7759051 | INSULATION SHEET | |
| 110 | XC7761051 | BOARD CASE UPPER | |
| 111 | XC7762051 | BOARD CASE LOW | |
| 112 | XC8533051 | GROUND PLATE UPPER | |
| 113 | XC8534051 | GROUND PLATE LOW | |
| 114 | 060300516 | SCREW BIND M3X5 | 040194 |
| 115 | XC4543051 | BOARD PRESSER | |
| 116 | XC8668051 | FC JACK SUPPLY ASSY | |
| 117 | X51271001 | NUT | |
| 118 | XC8430051 | ADJUST PLATE A | |
| 119 | XC8431051 | ADJUST PLATE B | |
| 120 | XC8457001 | COMMEMORATION BADGE (NV4000D: U.S.A.) | DEL 040199 |
| 121 | XC8894051 | BADGE ASSEMBLY (NV4000D: U.S.A.) | DEL 040199 |
| | XC9233051 | BADGE ASSEMBLY (NV4000D) | |
| | XC7694053 | LCD HOLDER (NV4000) | |

| No. | CODE | NAME | REMARKS |
|---|---|---|---|
| 122 | XA4689051 | BASE PLATE RUBBER | |
| 123 | 062500616 | SCREW PAN M5X8 | |
| 124 | XC7253051 | SHEET FOR D6 HARDCASE | 040177 |

# (1) PRINCIPAL PARTS

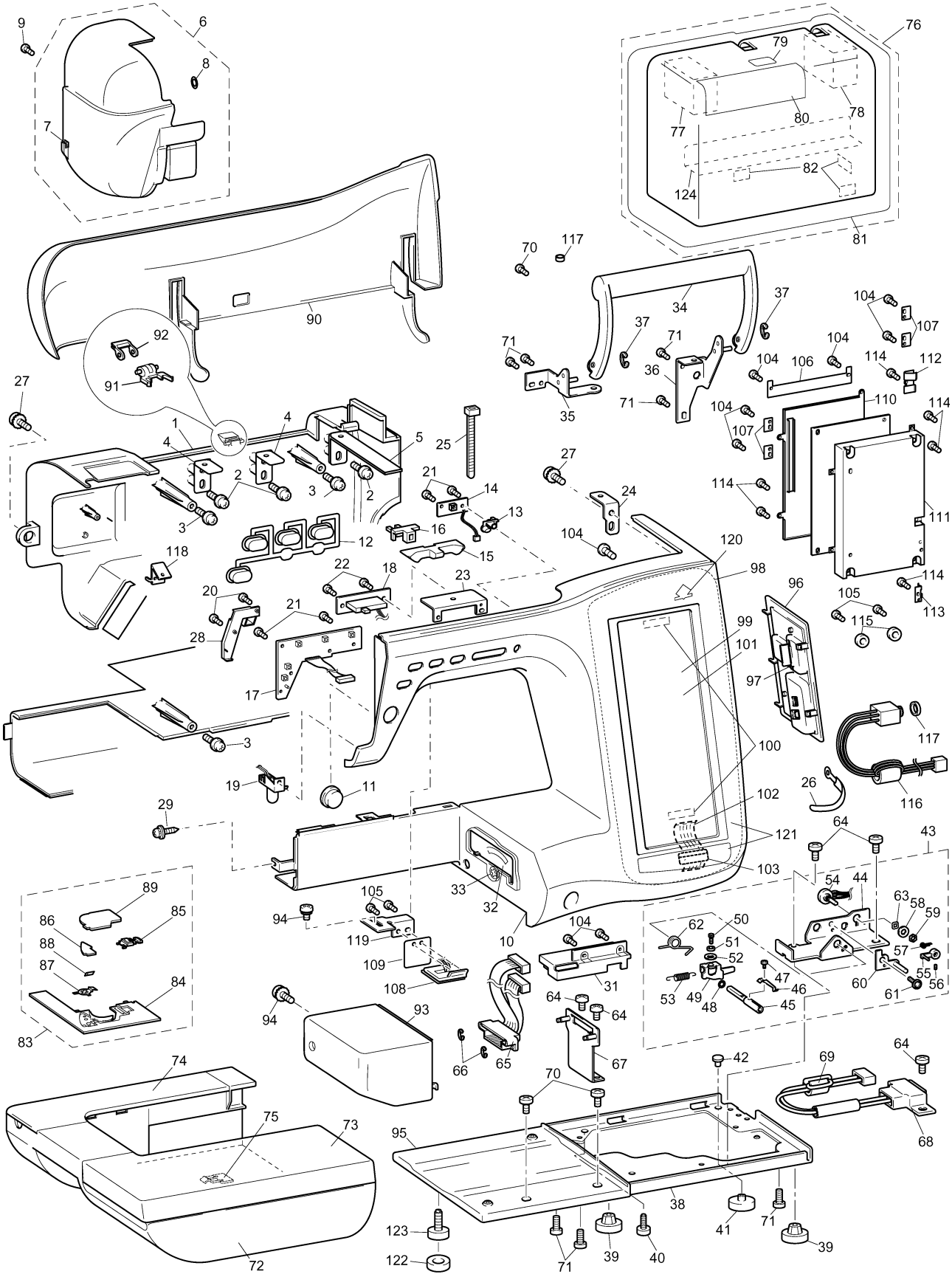

# LCD SUPPLY ASSEMBLY

| No. | CODE | NAME | REMARKS |
|---|---|---|---|
| 1 | XC8669251 | LCD MODULE SUPPLY ASSY (NV4000D: U.S.A.) | 040199 |
| | XC8684151 | LCD MODULE SUPPLY ASSY (NV4000D) | |
| 2 | XC8894051 | BADGE ASSEMBLY (NV4000D: U.S.A.) | DEL 040199 |
| | XC9233051 | BADGE ASSEMBLY (NV4000D) | |
| | XC7694053 | LCD HOLDER (NV4000) | |
| 3 | XC8891151 | LCD SUPPLY ASSY for U.S.A. | |
| | XC8892151 | LCD SUPPLY ASSY | |
| 4 | XC8211051 | TOUCH PANEL D6 | |
| 5 | XA6039051 | FRONT COVER SPACER B | |
| 6 | XC8457001 | COMMEMORATION BADGE (NV4000D: U.S.A.) | DEL 040199 |
| 7 | 136681051 | TAPTITE, BIND B M3X8 | |
| 8 | XC7840051 | LCD PRESSER A | |
| 9 | XC7850051 | LCD PRESSER B | |

# LCD SUPPLY ASSEMBLY

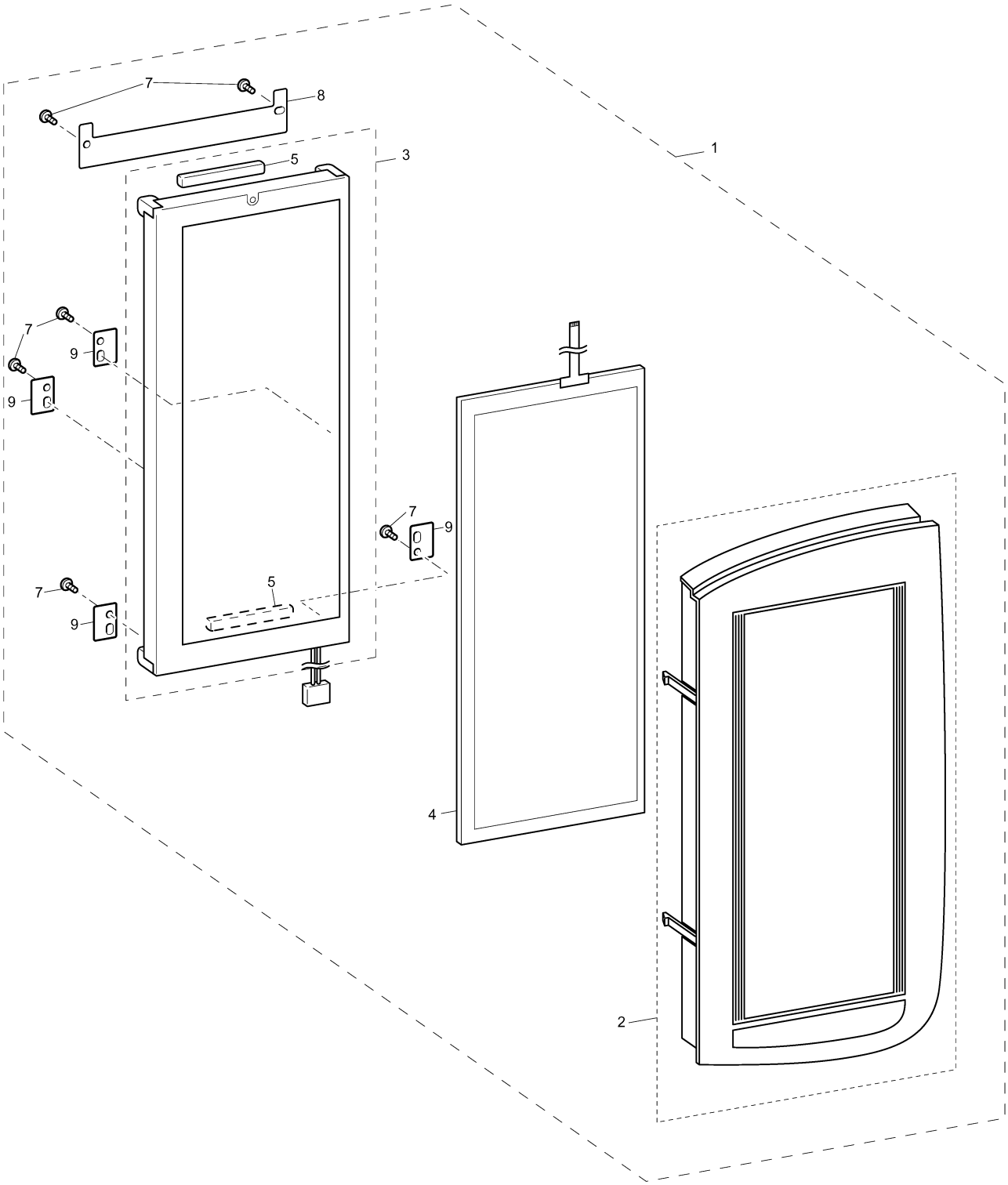

# (2) UPPER SHAFT / NEEDLE BAR, PRESSER MECHANISM

| No. | CODE | NAME | REMARKS |
|---|---|---|---|
| | | UPPER SHAFT MECHANISM | |
| 1 | XC8679051 | UPPER SHAFT SUPPLY ASSY | 040216 |
| 2 | 048080346 | RETAINING RING E8 | |
| 3 | 021300205 | NUT 2 M3 | |
| 4 | 014300632 | SET SCREW SOCKET (CP) M3X6 | |
| 5 | XC7775051 | FIXED JOINT | |
| 6 | 012500532 | SET SCREW SOCKET (FT) M5X5 | |
| 7 | X52478051 | BUSHING PRESSER | |
| 8 | X57908051 | TAPTITE,BIND S M4X10 | |
| 9 | XC7776051 | TIMING BELT 440-5GT-6 | |
| 10 | XC2385051 | TENSION PULLEY ASSEMBLY | |
| 11 | 0A5401005 | SCREW PAN (S/P WASHER) M4X10 | |
| 12 | XC8336051 | UPPER SHAFT COVER | |
| 13 | 060400616 | SCREW BIND M4X6 | |
| 14 | XC8219051 | ASSY:NP PCB-D6 | |
| 15 | 136681051 | TAPTITE, BIND B M3X8 | |
| 16 | XC7777051 | PCB HOLDER | |
| 17 | 060400816 | SCREW BIND M4X8 | |
| 18 | 014400432 | SET SCREW SOCKET (CP) M4X4 | |
| 19 | XC3183051 | FELT | |
| 20 | XC7772051 | PULLEY | |

| No. | CODE | NAME | REMARKS |
|---|---|---|---|
| | | NEEDLE BAR, PRESSER MECHANISM | |
| 21 | XC2505050 | PLATE SPRING | |
| 22 | 060400516 | SCREW BIND M4X5 | |
| 23 | XC2297051 | PRESSER PLATE A | |
| 24 | XC2298051 | PRESSER PLATE B | |
| 25 | XC2503051 | SHAFT | |
| 26 | XZ0380051 | SCREW, PAN (WASHER) M3X18 | 040227 |
| 27 | X57908051 | TAPTITE,BIND S M4X10 | |
| 28 | XC2504050 | ADJUSTING SCREW | |
| 29 | XC8019051 | PCB UNIT:LED LAMP-D6L | |
| 30 | 048050346 | RETAINING RING E5 | |
| 31 | XZ0149051 | TAPTITE,PAN B 4X12 | |

# (2) UPPER SHAFT / NEEDLE BAR, PRESSER MECHANISM

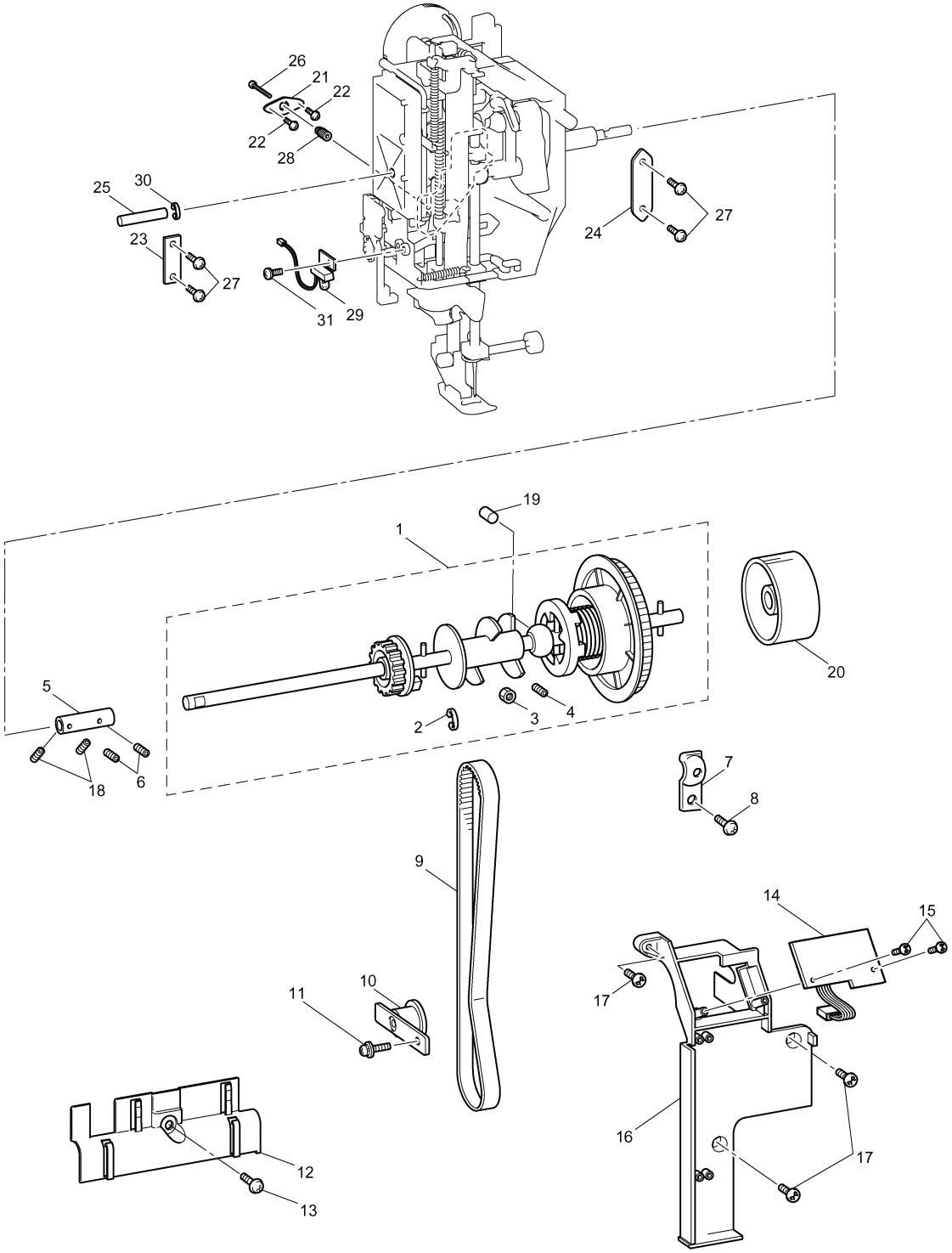

# (3) FEED, ROTARY HOOK / SIDE FEED / THREAD CUTTING MECHANISM

| No. | CODE | NAME | REMARKS |
|---|---|---|---|
| | | FEED, ROTARY HOOK MECHANISM | |
| 1 | XC3153051 | INNER ROTARY HOOK ASSY | |
| 2 | X52800150 | BOBBIN | |
| 3 | 060300416 | SCREW BIND M3X4 | |
| 4 | XC3096051 | SCREW M4 | |
| 5 | XC7876051 | LEAD WIRE GUIDE HOLDER | |
| 6 | XC7877051 | DROP LEVER | DEL 040221 |
| 7 | XC3587021 | SLIDE SHAFT A | DEL 040221 |
| 8 | 048020346 | RETAINING RING E2 | DEL 040221 |
| 9 | XZ0160051 | SHEET | |
| 10 | XC7878051 | DROP COVER | |
| 11 | X53169050 | BAND | 040221 |
| | | SIDE FEED MECHANISM | |
| 12 | X57908051 | TAPTITE,BIND S M4X10 | |
| 13 | XA2189050 | RUBBER | |
| 14 | XA2401050 | WASHER | |
| 15 | XA9506051 | SIDE FEED GEAR | |
| 16 | XA9507050 | SIDE FEED WASHER | |
| 17 | XA9508051 | SPRING,EXTENSION | |
| 18 | 048030346 | RETAINING RING E3 | |
| 19 | XA9514051 | SPRING,PLATE A | |
| 20 | 060300616 | SCREW BIND M3X6 | |
| 21 | XC0411051 | S STOPPER | |
| 22 | XC8242051 | ASSY:S PULSE MOTOR | |
| 23 | XC8243051 | ASSY:SPM LEAD WIRE | |
| 24 | 060300416 | SCREW BIND M3X4 | |
| 25 | XC6258051 | SIDE FEED PLATE | |
| 26 | XC8418051 | SPM HOLDER ASSY | |
| 27 | XC6259051 | SIDE FEED ARM ASSY | |
| 28 | XC6263051 | SIDE FEED ADJUST PLATE | |
| 29 | XC6264051 | SPRING,PLATE B | |
| 30 | 060300516 | SCREW BIND M3X5 | |
| 31 | XA8390051 | SCREW | |
| 32 | T31049001 | COATING CLIP CS-6 | |

| No. | CODE | NAME | REMARKS |
|---|---|---|---|
| | | THREAD CUTTING MECHANISM | |
| 33 | XC8329151 | PHOTO TRANSISTOR ASSY | |
| 34 | XC9199051 | SENSOR HOLDER | DEL |
| 35 | XC8245051 | ASSY,PHOTO TRANSISTOR | DEL |
| 36 | 0A4300605 | SCREW PAN (S/P WASHER) M3X6 | |
| 37 | 060400516 | SCREW BIND M4X5 | |
| 38 | 060300516 | SCREW BIND M3X5 | |
| 39 | X53169050 | BAND | |

# (3) FEED, ROTARY HOOK / SIDE FEED / THREAD CUTTING MECHANISM

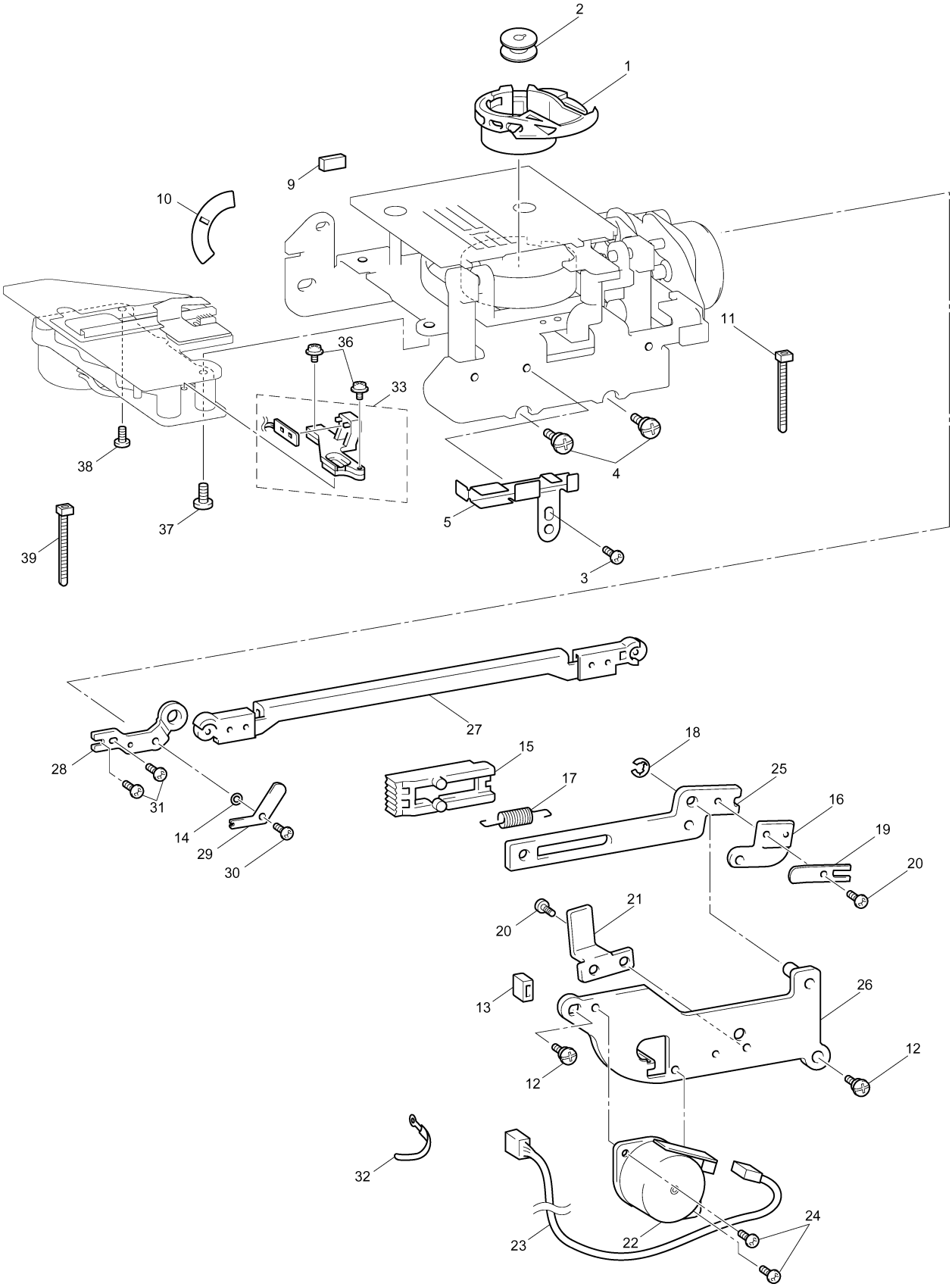

# (4) ROTARY HOOK DRIVE / BOBBIN WINDER MECHANISM

| No. | CODE | NAME | REMARKS |
|---|---|---|---|
| | | ROTARY HOOK DRIVE MECHANISM | |
| 1 | XC7890051 | LOWER SHAFT A | |
| 2 | XC2601051 | TIMING PULLEY D | |
| 3 | 014500532 | SET SCREW SOCKET (CP) M5X5 | |
| 4 | X52664050 | LOWER SHAFT BUSHING | |
| 5 | X51383050 | WASHER,THRUST | |
| 6 | 048060346 | RETAINING RING E6 | |
| 7 | 137768151 | SET SCREW COLLAR | |
| 8 | 014400432 | SET SCREW SOCKET (CP) M4X4 | |
| 9 | XC2602051 | JOINT | |
| 10 | 012500532 | SET SCREW SOCKET (FT) M5X5 | |
| 11 | XC2602051 | JOINT | |
| 12 | 012500532 | SET SCREW SOCKET (FT) M5X5 | |
| 13 | 132421051 | BUSHING PRESSER | |
| 14 | X57908051 | TAPTITE,BIND S M4X10 | |
| 15 | XC2603050 | DISK | |
| 16 | XC3183051 | FELT | |

| No. | CODE | NAME | REMARKS |
|---|---|---|---|
| | | BOBBIN WINDER MECHANISM | |
| 17 | XC7696051 | UPPER COVER | |
| 18 | XC7894051 | BOBBIN WINDER HOLDER ASSY | |
| 19 | XC7898051 | BW MOTOR ASSY | |
| 20 | 125928050 | BOBBIN WINDER SHAFT SPRING | |
| 21 | XC7902051 | BOBBIN PRESSURE | |
| 22 | XC7903051 | BOBBIN PRESSURE GUIDE ASSY | |
| 23 | 137999050 | POLYESTER SLIDER | |
| 24 | 048030346 | RETAINING RING E3 | |
| 25 | XA9545051 | SPRING | |
| 26 | XC8254051 | ASSY:BWSW D6 | |
| 27 | XC8194051 | BW SWITCH HOLDER | |
| 28 | XC6055051 | SCREW, BIND M3X3 | |
| 29 | XC8371051 | BOBBIN PRESSER COVER | |
| 30 | 136681051 | TAPTITE, BIND B M3X8 | |
| 31 | 137947001 | CLIP | |
| 32 | XC7905051 | TENSION GUIDE ASSY | |
| 33 | 0A4300806 | SCREW PAN (S/P WASHER) M3X8 | |
| 34 | XC7907051 | THREAD GUIDE PLATE | |
| 35 | XC7908051 | SUB SPOOL STAND PIN | |
| 36 | XC7909051 | SUB SPOOL PIN HOLDER | |
| 37 | XC7910051 | NOTCH PLATE | |
| 38 | XA9371051 | SHAFT | |
| 39 | XC6055051 | SCREW, BIND M3X3 | |
| 40 | XA1786053 | SPOOL PIN | |
| 41 | X55260153 | SPOOL PRESSER C | |
| 42 | XC7911051 | SPOOL PIN HOLDER B ASSY | |
| 43 | 136681051 | TAPTITE, BIND B M3X8 | |
| 44 | 085411015 | TAPTITE BIND B M4X10 | |
| 45 | XC7912051 | BOBBIN BASE ASSY | |
| 46 | X80321001 | NT LOWER THREAD CUTTER | |
| 47 | XC7914051 | BOBBIN THREAD CUTTER HOLDER | |
| 48 | XC8432051 | THREAD GUARD PLATE | |
| 49 | 087310816 | TAPTITE CUP B M3X8 | |
| 50 | 060400516 | SCREW BIND M4X5 | |
| 51 | 060400616 | SCREW BIND M4X6 | |

# (4) ROTARY HOOK DRIVE / BOBBIN WINDER MECHANISM

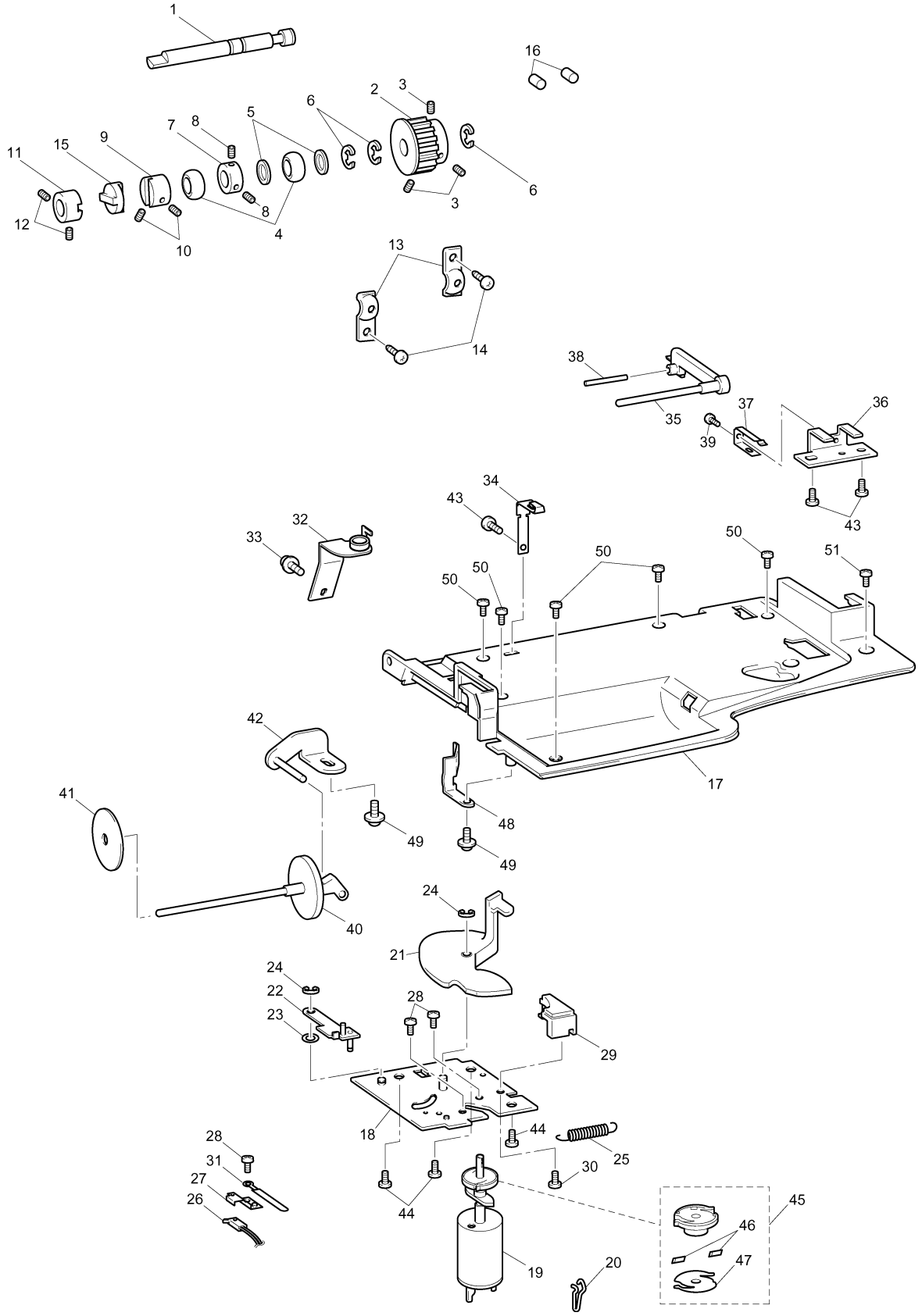

# (5) THREAD GUIDE MECHANISM / THREAD HOOK MECHANISM

| No. | CODE | NAME | REMARKS |
|---|---|---|---|
| | | THREAD GUIDE MECHANISM | |
| 1 | XC7917051 | THREAD GUARD ASSEMBLY | |
| 2 | XA0083051 | TENSION DISC A | |
| 3 | XC2626051 | TENSION DISC B | |
| 4 | XC3437051 | TENSION ADJUSTING SCREW | |
| 5 | XA1388051 | TENSION DISC WASHER | |
| 6 | XC7920051 | TENSION RELEASE PLATE ASSY | |
| 7 | XA9900051 | THREAD TENSIONSPRING | |
| 8 | 109763053 | WASHER | |
| 9 | XA9562051 | TENSION PLATE ASSY | |
| 10 | XC7922050 | THREAD TENSION CAM | |
| 11 | 048030346 | RETAINING RING E3 | |
| 12 | XC7923051 | THREAD TENSION GEAR COVER | |
| 13 | XA9935050 | SPRING TAPE | |
| 14 | X57605051 | SPRING | 040178 |
| 15 | 048020346 | RETAINING RING E2 | |
| 16 | 026030136 | WASHER PLAIN S 3 | |
| 17 | XC7925051 | TENSION RELEASE HOLDER ASSY | |
| 18 | XA9571051 | TENSION RELEASER LINK | |
| 19 | 048030346 | RETAINING RING E3 | |
| 20 | XC2638051 | TENSION PRESSURE ASSY | |
| 21 | XC9115051 | TENSION PLATE | |
| 22 | XC7927051 | SPACER | |
| 23 | XA9577051 | SPRING | |
| 24 | XC2640051 | TENSION RELEASE CAM | |
| 25 | 012300432 | SET SCREW SOCKET (FT) M3X4 | |
| 26 | X57363051 | POWER LOCK 2X3 | |
| 27 | X57605051 | SPRING | |
| 28 | 048020346 | RETAINING RING E2 | |
| 29 | XC7928051 | THREAD GUIDE | |
| 30 | XZ0386051 | THREAD TAKE UP SPRING | |
| 31 | 0A4301806 | SCREW, PAN (S/P WASHER) M3X18 | |
| 32 | XC7929050 | PRESSER SW LINK | |
| 33 | 048030346 | RETAINING RING E3 | |
| 34 | XC7930051 | SPRING | |
| 35 | XC7931050 | THREAD GUIDE WIRE | |
| 36 | XA9996051 | WASHER,PLAIN | |
| 37 | XC7564051 | SCREW, PAN(S/P WASHER)M3X6 | |
| 38 | 060300416 | SCREW BIND M3X4 | |
| 39 | XC7932051 | PRESSER SWITCH HOLDER | |
| 40 | XC8256051 | ASSY:PFSW D6 | |
| 41 | XC8258051 | ASSY:AT PULSE MOTOR | |
| 42 | XC8259051 | ASSY:ATPM LEAD WIRE | |
| 43 | XC7933051 | ATPM SENSOR PLATE | |

| No. | CODE | NAME | REMARKS |
|---|---|---|---|
| 44 | XC8260051 | ASSY:AT INIT PCB | |
| 45 | X58316051 | THREAD CUTTING SHUTTER | |
| 46 | XA9585051 | THREAD CATCHING SPRING CASE | |
| 47 | XC8262051 | ASSY:UPTHREAD PCB | |
| 48 | XC7934051 | THREAD SENSOR HOLDER | |
| 49 | X53169050 | BAND | |
| 50 | XA5246021 | SPRING | DEL 040198 |
| 51 | 085411015 | TAPTITE BIND B M4X10 | DEL 040198 |
| 52 | XC7941051 | THREAD GUIDE BASE | |
| 53 | XC7942051 | BELT GUIDE | |
| 54 | XC7943051 | THREAD HOOK | |
| 55 | XC7944050 | THREAD HOOK SLIDER | |
| 56 | XC7945050 | ROLLER | |
| 57 | XC7948051 | BELT 20S2M264 | |
| 58 | XC7949051 | TGPM HOLDER SUB ASSY | |
| 59 | XC7952050 | IDLE GEAR | |
| 60 | XC8267051 | ASSY:TG PULSE MOTOR | |
| 61 | XC7954050 | TGPM COVER | |
| 62 | XC7955050 | DRIVING PULLEY | |
| 63 | XC8572050 | BRAKE PLATE | |
| 64 | X57605051 | SPRING | |
| 65 | 048020346 | RETAINING RING E2 | |
| 66 | XC7947050 | INITIAL SW HOLDER | |
| 67 | XC8265051 | ASSY:TGSW D6 | |
| 68 | 137947001 | CLIP | |
| 69 | XC9271051 | INSULATION SHEET FOR TGPM | |
| 70 | 060300516 | SCREW BIND M3X5 | |
| 71 | 085411015 | TAPTITE BIND B M4X10 | |
| 72 | XC7936051 | FRONT THREAD GUARD COVER | |
| 73 | 0A5300606 | SCREW, PAN (S/P WASHER) M3X6 | |
| 74 | XC7938051 | THREAD GUIDE COVER A | |
| 75 | XC8414051 | THREAD HOLD PLATE | |
| 76 | XC8935051 | SPRING, COMPRESSION | |
| 77 | XC8949051 | WASHER 2.1X8 | |
| 78 | 083210615 | TAPTITE PAN B M2X6 | |
| 79 | XC8411051 | CUTTER HOLDER | |
| 80 | X80321001 | NT LOWER THREAD CUTTER | |
| 81 | 085310616 | TAPTITE BIND B M3X6 | |
| 82 | XC8574151 | PILE | 040237 |
| | | | |
| | | | |
| | | | |
| | | | |
| | | | |

# (5) THREAD GUIDE MECHANISM / THREAD HOOK MECHANISM

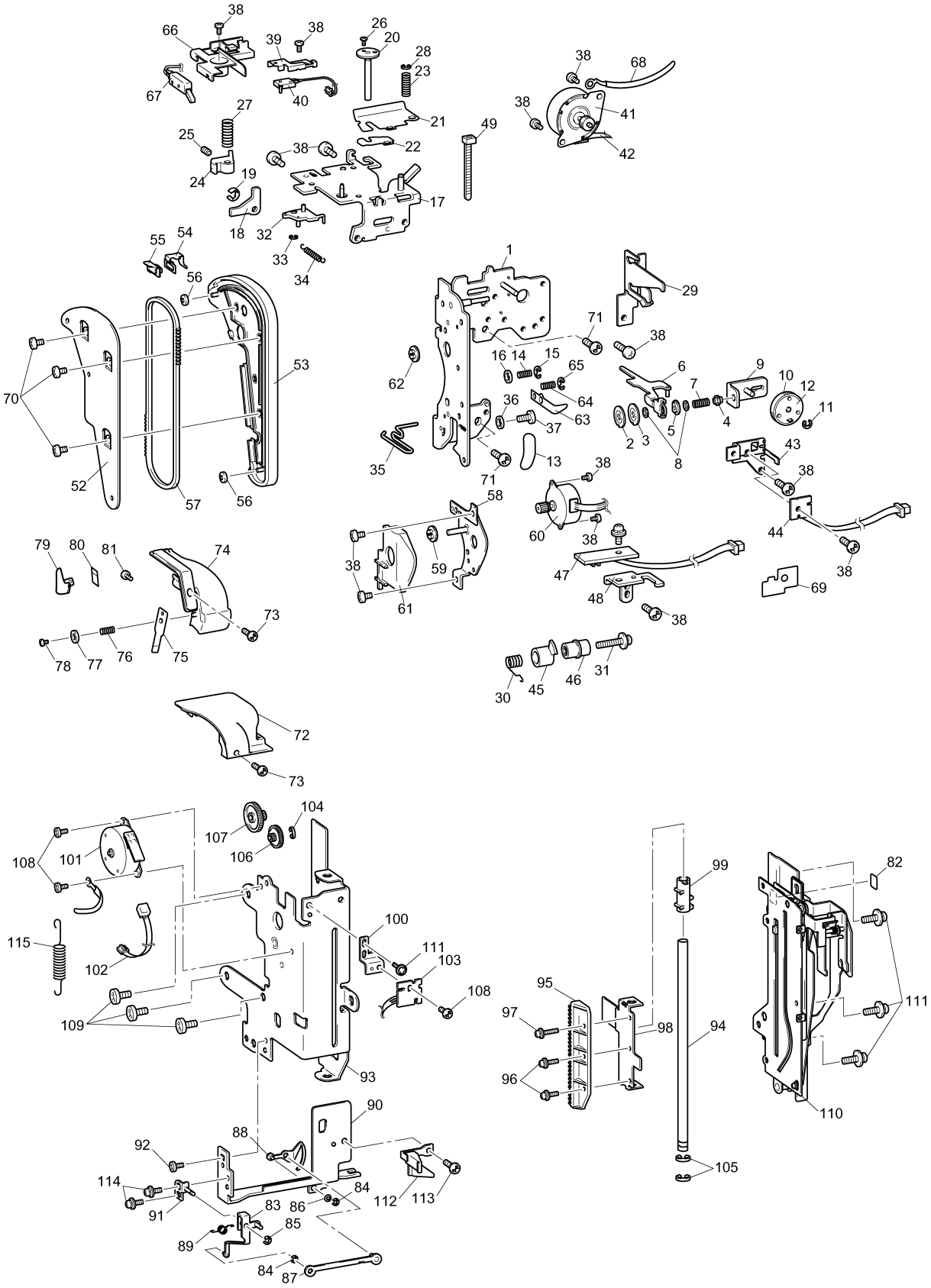

# (5) THREAD GUIDE MECHANISM / THREAD HOOK MECHANISM

| No. | CODE | NAME | REMARKS |
|---|---|---|---|
| | | THREAD HOOK MECHANISM | |
| 83 | XC7958051 | LINK PLATE A ASSY | |
| 84 | 048020346 | RETAINING RING E2 | |
| 85 | 048030346 | RETAINING RING E3 | |
| 86 | XZ0399051 | WASHER | |
| 87 | XC7962051 | LINK PLATE B ASSY | |
| 88 | XC7964051 | THREAD GUIDE PLATE ASSY | |
| 89 | XC7966051 | SPRING | |
| 90 | XC7967051 | THREAD GUIDE BASE PLATE | |
| 91 | XC7968051 | LINK A BASE ASSY | |
| 92 | 060300616 | SCREW BIND M3X6 | |
| 93 | XC7972051 | UNIT ASSY | |
| 94 | XC7976051 | GUIDE SHAFT | |
| 95 | XC7977050 | RACK | |
| 96 | 0A4300806 | SCREW PAN (S/P WASHER) M3X8 | |
| 97 | 0A4301206 | SCREW PAN (S/P WASHER) M3X12 | |
| 98 | XC7978051 | SLIDER | |
| 99 | XC7979050 | TRIGGER | |
| 100 | XC7980051 | SENSOR HOLDER | |
| 101 | XC9289051 | THPM INSULATION ASSY | |
| 102 | XC8268051 | ASSY:THPM LEAD WIRE | |
| 103 | XC8269051 | ASSY:ATTHD INIT PCB | |
| 104 | 048025346 | RETAINING RING E2.5 | |
| 105 | 048030346 | RETAINING RING E3 | |
| 106 | XC7982050 | IDLE GEAR A | |
| 107 | XC7983050 | DRIVE GEAR A | |
| 108 | 060300416 | SCREW BIND M3X4 | |
| 109 | 085411015 | TAPTITE BIND B M4X10 | 040187 |
| 110 | XC9250151 | THREAD GUIDE BASE SUPPLY ASSY | 040237 |
| 111 | XC7644051 | SCREW, PAN (S/P WASHER) M3X5 | |
| 112 | XC8609051 | PILE HOLDER ASSY | |
| 113 | 008300404 | SCREW TRUSS M3X4 | |
| 114 | 0A4300605 | SCREW, PAN (S/P WASHER) M3X6 | 040180 |
| 115 | X52005151 | SPRING | 040202 |
| | | | |
| | | | |
| | | | |
| | | | |
| | | | |
| | | | |
| | | | |
| | | | |
| | | | |
| | | | |

# (5) THREAD GUIDE MECHANISM / THREAD HOOK MECHANISM

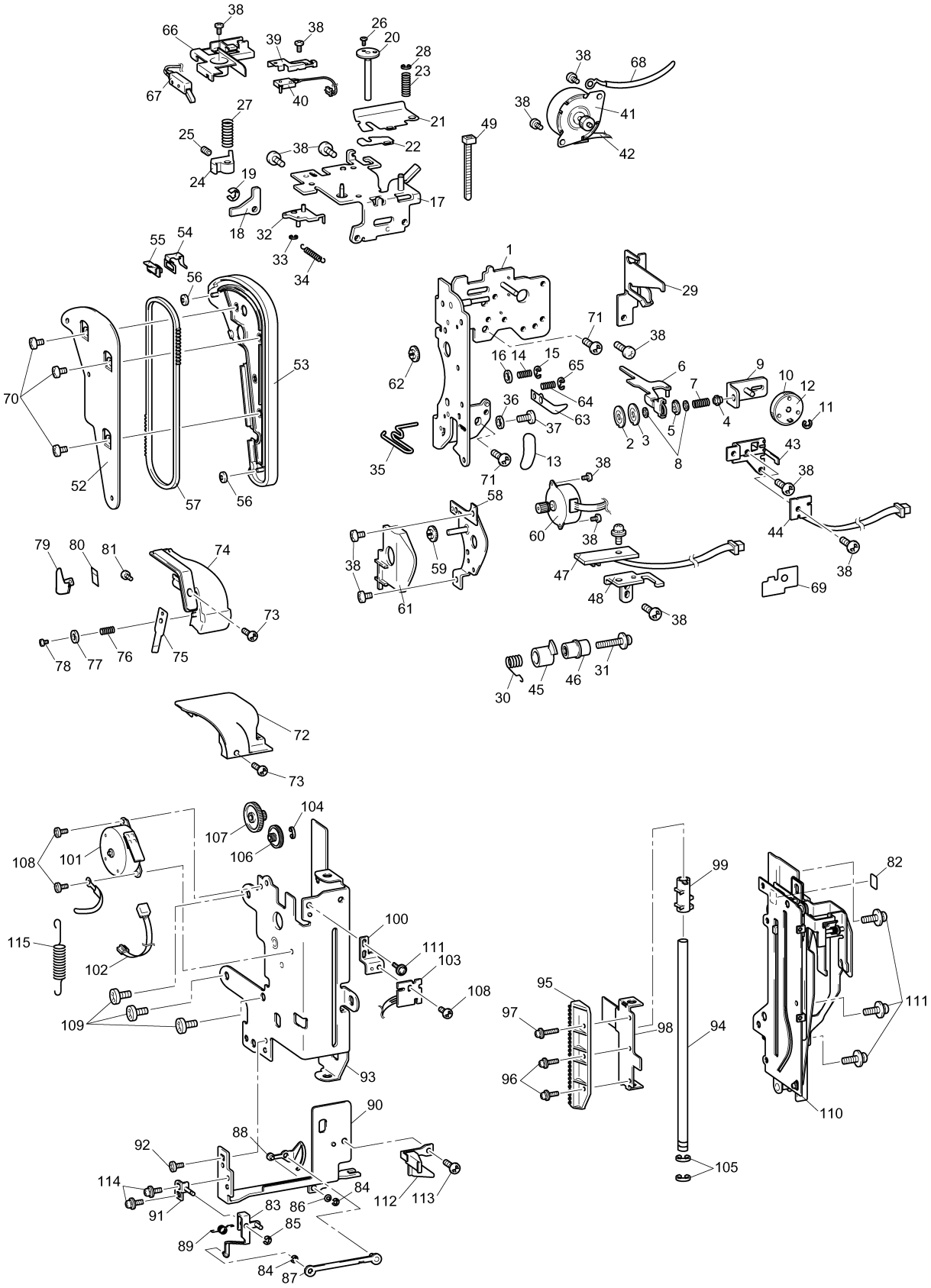

# (6) ELECTRONIC PARTS / MOTOR UNIT

| No. | CODE | NAME | REMARKS |
|---|---|---|---|
| | | ELECTRONIC PARTS | |
| 1 | XC8675051 | SUPPLY ASSY:MAIN PCB | |
| 2 | 136681051 | TAPTITE, BIND B M3X8 | |
| 3 | 060300616 | SCREW BIND M3X6 | |
| 4 | XC8676051 | SUPPLY ASSY:PANEL PCB B | |
| 5 | XC8288051 | MAIN-PANEL LEAD WIRE A | |
| 6 | XC8289051 | MAIN-PANEL LEAD WIRE B | |
| 7 | XC8290051 | INVERTER :D6 | |
| 8 | XC8291051 | INVERTER LEAD WIRE | |
| 9 | XC8292051 | POWER SUPPLY UNIT, D6US (U.S.A., CAN) | |
| | XC8352051 | POWER SUPLY UNIT, D6EU | |
| 10 | XC7568051 | SCREW, PAN(S/P WASHER)M4X14 | |
| 11 | 137947001 | CLIP | |
| 12 | X53169050 | BAND | |
| 13 | XC5069051 | SPIRAL TUBE A | |
| 14 | T31049001 | COATING CLIP CS-6 | |

| No. | CODE | NAME | REMARKS |
|---|---|---|---|
| | | MOTOR UNIT | |
| 15 | XA9644050 | T BELT | |
| 16 | XC8294051 | ASSY:MAIN MOTOR | |
| 17 | XC8027051 | MOTOR HOLDER | |
| 18 | XA9649050 | FENDER RUBBER | |
| 19 | XA9650051 | MOTOR SPACER PRESSER | |
| 20 | XC0443051 | SPACER 4X7 | |
| 21 | 052401605 | SCREW, PAN (S/P WASHER) M4X16 | |
| 22 | XC6481051 | MOTOR CAP | |
| 23 | XC5763051 | MOTOR HOLDER SPACER | |
| 24 | XA8474051 | UPSET 4X12 DB | |
| 25 | XA9652150 | MOTOR FAN | |
| 26 | XC8028051 | FOOT CONTROLLER : FC-321-81-LF | |
| | XD0500051 | FOOT CONTROLLER : FC-321-LF-EU | 050033 |
| 27 | XC8029051 | PCB HOLDER R | |

# (6) ELECTRONIC PARTS / MOTOR UNIT

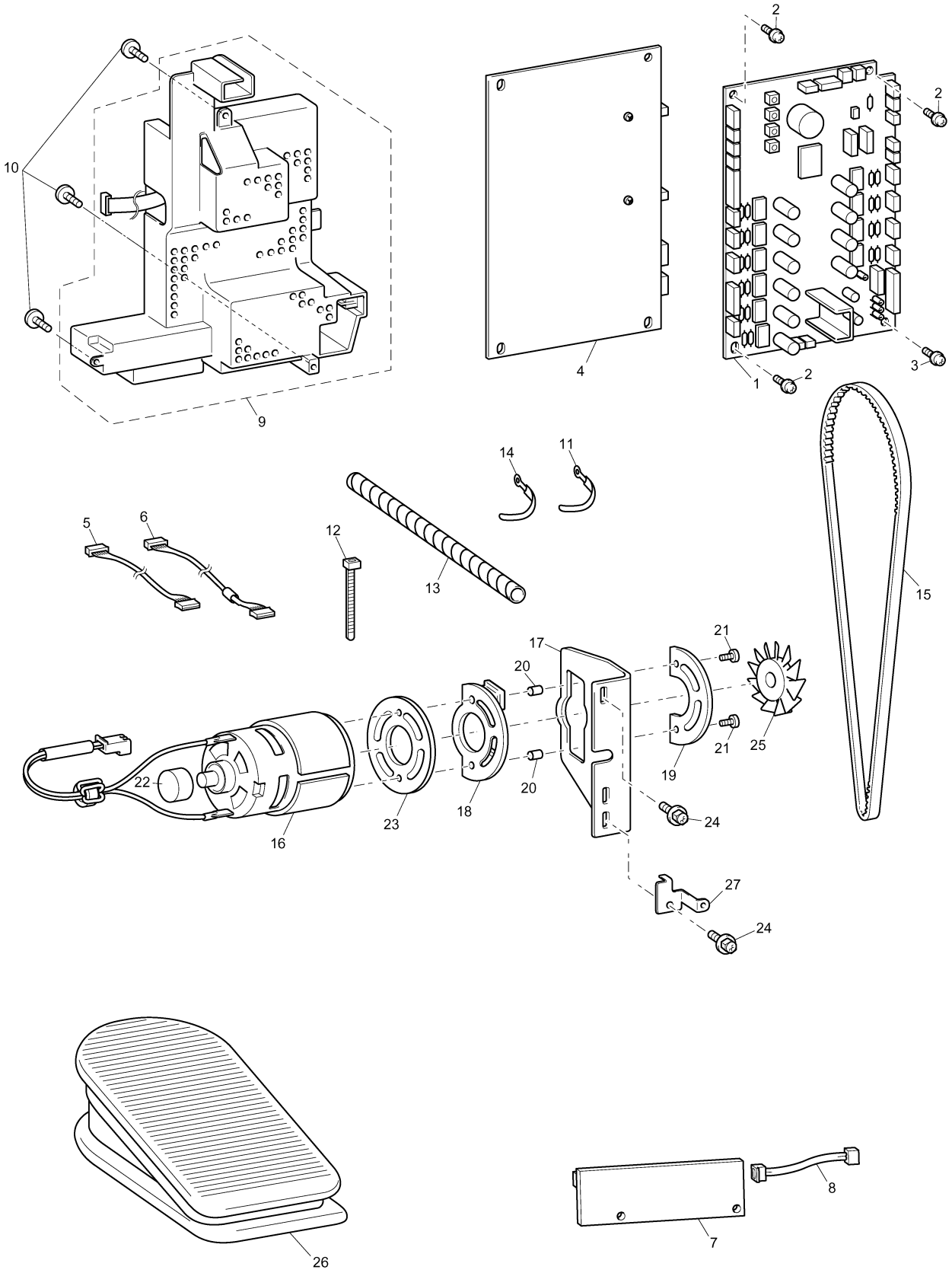

# (7) EMBROIDERY UNIT

| No. | CODE | NAME | REMARKS |
|---|---|---|---|
| 1 | XC8035051 | MAIN FRAME SUD ASSY | |
| 2 | XC8038050 | DRIVING PULLEY | |
| 3 | XC8039050 | DRIVING GEAR | |
| 4 | XC8298051 | ASSY:XY PULSE MOTOR | |
| 5 | XC8299051 | ASSY:XPM LEAD WIRE | |
| 6 | XA8390051 | SCREW | |
| 7 | XC8041051 | TIMING BELT 40S2M530 | 040196 |
| 8 | XC8042051 | TENSION PULLEY ASSY | |
| 9 | XC8045050 | TENSION PULLEY | |
| 10 | XC8046051 | X GUIDE PLATE | |
| 11 | XC8047050 | E CODE SUPPORTER | |
| 12 | XC7566051 | SCREW, PAN(S/P WASHER)M4X8 | |
| 13 | XC8300051 | ASSY:X SENSOR PCB | |
| 14 | 060300616 | SCREW BIND M3X6 | |
| 15 | X53169050 | BAND | |
| 16 | XC8303051 | ASSY:EMB RELAY PCB | |
| 17 | XC8049051 | X CARRIAGE UNIT | |
| 18 | XC8038050 | DRIVING PULLEY | |
| 19 | XC8039050 | DRIVING GEAR | |
| 20 | XC8298051 | ASSY:XY PULSE MOTOR | |
| 21 | XC8306051 | ASSY:YPM LEAD WIRE | |
| 22 | XA8390051 | SCREW | |
| 23 | XC8058050 | FFC CODE GUIDE | |
| 24 | XC8586050 | FFC CODE SUPPORTER | |
| 25 | 060300616 | SCREW BIND M3X6 | |
| 26 | XC8042051 | TENSION PULLEY ASSY | |
| 27 | XC8045050 | TENSION PULLEY | |
| 28 | XC8059051 | TIMING BELT 40S2M740 | |
| 29 | XC8061051 | Y SLIDER | |
| 30 | XC8062051 | YT BELT PRESSER PLATE | |
| 31 | XC7566051 | SCREW, PAN(S/P WASHER)M4X8 | |
| 32 | XC8065051 | Y CARRIAGE ASSY | |
| 33 | XC8068051 | Y GUIDE SHAFT | |
| 34 | XC8070151 | E HOOP STAY PLATE SUB ASSY | 040245 |
| 35 | XC8074051 | E HOOP LOCK LEVER | |
| 36 | XC8075051 | E HOOP LOCK LEVER SPRING | |
| 37 | 048040346 | RETAINING RING E4 | |
| 38 | XC8307051 | ASSY:FRAME PCB | |
| 39 | XC8076051 | E HOOP PRESSURE PLATE | |
| 40 | XC8077051 | E HOOP PRESSURE SPRING A | |
| 41 | XC8079051 | E HOOP PRESSURE SPRING C | |
| 42 | 060300416 | SCREW BIND M3X4 | |
| 43 | XA8390051 | SCREW | |
| 44 | XC8859051 | INSULATOR SHEET | |
| 45 | 060400616 | SCREW BIND M4X6 | |
| 46 | XC8080051 | STOP RING 10.69 | |
| 47 | XC8081051 | WASHER | |
| 48 | XC8082050 | WASHER,SPRING 12 | |
| 49 | 085301017 | TAPTITE BIND P M3X10 | |
| 50 | XC8084050 | FFC SUPPORT | |
| 51 | XC8310051 | FLEXIBLE FLAT CABLE:SML2CD-6 | |
| 52 | 060300616 | SCREW BIND M3X6 | |
| 53 | XC8085050 | CORD CLIP | |
| 54 | XC8311051 | ASSY:Y SENSOR PCB | |
| 55 | XC8086050 | CODE GRIP | |
| 56 | XC8087051 | X SLIDER | |
| 57 | XC7566051 | SCREW, PAN(S/P WASHER)M4X8 | |
| 58 | XC8898051 | X GUIDE SHAFT PRESSER PLATE | |
| 59 | XC8899050 | X GUIDE SHAFT PRESSER | |
| 60 | 060300416 | SCREW BIND M3X4 | |
| 61 | XC8088051 | X BELT PRESSER | |
| 62 | XC7566051 | SCREW, PAN(S/P WASHER)M4X8 | |
| 63 | XC7697051 | ES BASE COVER | |
| 64 | XC8093051 | GROOVE COVER | |
| 65 | X59853050 | RUBBER CUSHION | |
| 66 | XC8094051 | RUBBER CUSHION COVER | |
| 67 | XC8095051 | LOCK FINGER | |
| 68 | XC8096051 | SPRING | |
| 69 | XC8097051 | LOCK RELEASE LEVER | |
| 70 | XC8099051 | DROP LEVER SUPPORT ASSY | |
| 71 | XC8102051 | DROP LEVER CALKING ASSY | |
| 72 | XC8105050 | NOTCHED CAM | |
| 73 | 085301017 | TAPTITE BIND P M3X10 | |
| 74 | XC8107051 | DROP NOTCHED PLATE | |
| 75 | 060300616 | SCREW BIND M3X6 | |
| 76 | XC8313051 | ASSY,DROP SW | |
| 77 | XC8108051 | DROP SW HOLDER | |
| 78 | XC8106051 | DROP KNOB | |
| 79 | XA8390051 | SCREW | |
| 80 | XC8109051 | DROP CONNECTION ROD | |
| 81 | 085301017 | TAPTITE BIND P M3X10 | |
| 82 | XC7566051 | SCREW, PAN(S/P WASHER)M4X8 | |
| 83 | XC8315051 | ASSY,EMB UNIT LEAD WIRE | |
| 84 | 085301615 | TAPTITE BIND P M3X16 | |
| 85 | 087411416 | TAPTITE CUP B M4X14 | |
| 86 | X53169050 | BAND | |
| 87 | XC7566051 | SCREW, PAN(S/P WASHER)M4X8 | |
| 88 | XC8110051 | ES MAIN COVER ASSY | |

# (7) EMBROIDERY UNIT

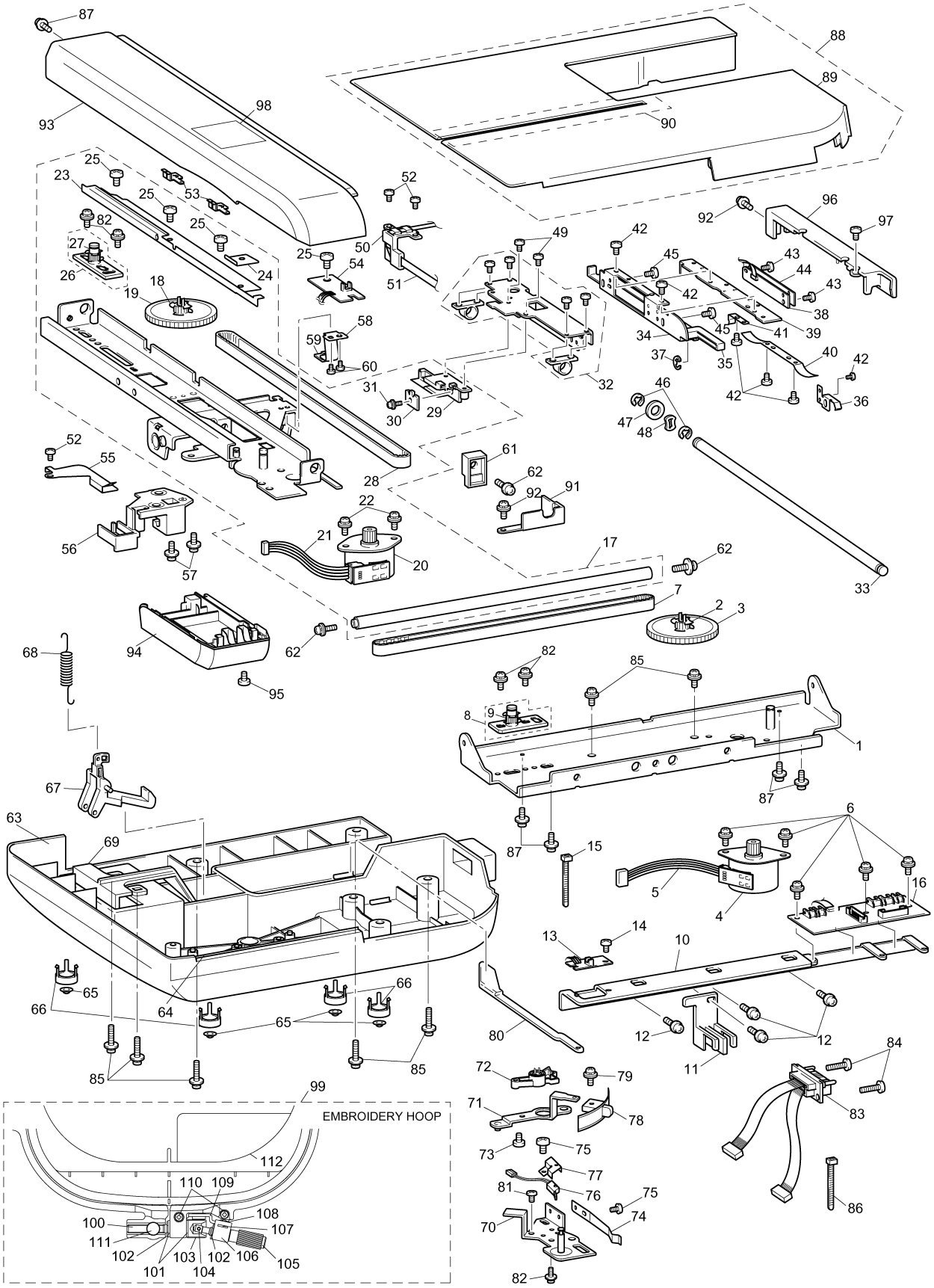

# (7) EMBROIDERY UNIT

| No. | CODE | NAME | REMARKS |
|---|---|---|---|
| 89 | XC7698051 | ES MAIN COVER | |
| 90 | XC8093051 | GROOVE COVER | |
| 91 | XC8112051 | XC SUB COVER | |
| 92 | XA8390051 | SCREW | |
| 93 | XC7700051 | X CARRIAGE COVER | |
| 94 | XC7699051 | YPM COVER | |
| 95 | 085301017 | TAPTITE BIND P M3X10 | |
| 96 | XC8089051 | E HOOP STAY COVER | |
| 97 | 060300416 | SCREW BIND M3X4 | |
| 98 | XC8666051 | LOCK LEVER SEAL | |
| 99 | XC8115051 | EMBROIDERY HOOP ASSY 60D6 | |
| | XC8132051 | EMBROIDERY HOOP ASSY 100D6 | |
| | XC8137051 | EMBROIDERY HOOP ASSY 130D6 | |
| | XC8142051 | EMBROIDERY HOOP ASSY 180D6 | |
| 100 | XC8118051 | THUMB SCREW | |
| 101 | 026050136 | WASHER PLAIN S 5 | |
| 102 | 048040346 | RETAINING RING E4 | |
| 103 | XC8119051 | RING | |
| 104 | XC8120051 | KNOB PIN | |
| 105 | XC8121051 | KNOB SHAFT | |
| 106 | XC8122051 | KNOB HOLDER | |
| 107 | XC8123051 | KNOB FIXED PLATE | |
| 108 | 060260316 | SCREW BIND M2.6X3 | |
| 109 | XC8124051 | HOLDER ASSY | |
| 110 | 0A4260806 | SCREW PAN (S/P WASHER) M2.6X8 | |
| 111 | XC8129051 | OUTER HOOP NUT | |
| 112 | XC8355051 | EMBROIDERY SHEET 60D6 ASSY | |
| | XC8357051 | EMBROIDERY SHEET 100D6 ASSY | |
| | XC8359051 | EMBROIDERY SHEET 130D6 ASSY | |
| | XC8147051 | EMBROIDERY SHEET 180D6 ASSY | |
| | | | |
| | XC8150051 | CARRYING CASE | |
| | X60439151 | BAG,630X630T | |
| | XC8151051 | CARRIAGE PAD A D | |
| | XC8936051 | CARRIAGE PAD B D | |

| No. | CODE | NAME | REMARKS |
|---|---|---|---|
| | XC8031061 | EMBROIDERY UNIT ASSEMBLY | 050021 |

# (7) EMBROIDERY UNIT

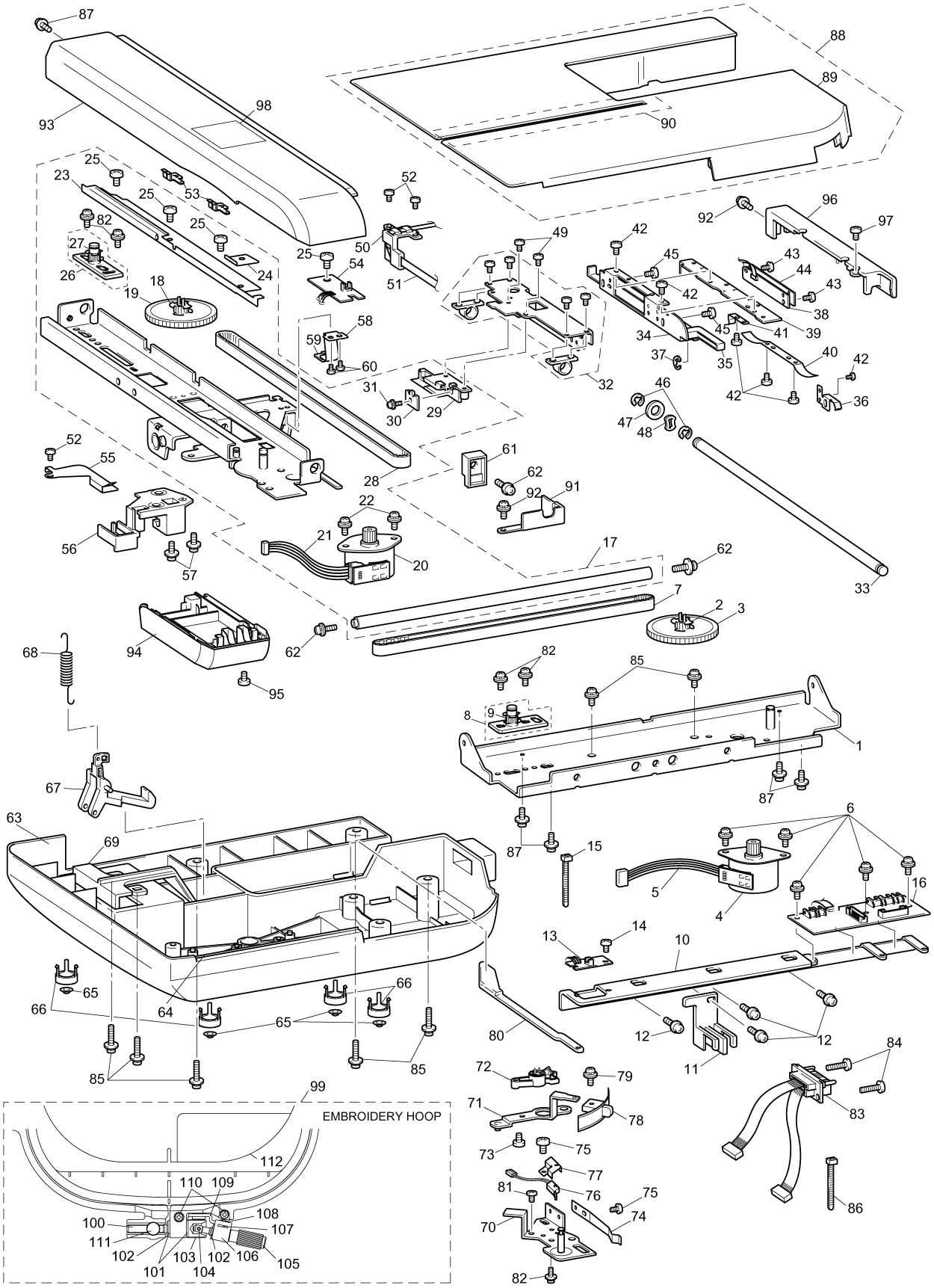

# (8) ATTACHMENTS / PACKING MATERIALS / PRINTED MATTER

| No. | CODE | NAME | REMARKS |
|---|---|---|---|
| | | ATTACHMENTS | |
| 1 | XC4487051 | ACCESSORY BAG | |
| 2 | X57789151 | BH PRESSER FOOT | |
| 3 | X54243001 | SEAM RIPPER | |
| 4 | X58358051 | Z NEEDLE ASSY | |
| 5 | 184783051 | SCISSORS | |
| 6 | X52800150 | BOBBIN | |
| 7 | X59476051 | CLEANING BRUSH | |
| 8 | XC3098051 | OVERCASTING STITCH FOOT ASSY | |
| 9 | 130012054 | SPOOL PRESSER A | |
| 10 | X56409051 | BLIND STITCH FOOT ASSY | |
| 11 | X59370051 | ZIPPER FOOT | |
| 12 | 130013154 | SPOOL PRESSER B | |
| 13 | XA5523050 | NET | |
| 14 | X55467051 | SCREW DRIVER | |
| 15 | X55468051 | SCREW DRIVER S | |
| 16 | 135793001 | PUNCH | |
| 17 | X53840351 | TRANSPARENCY PRESSER FOOT | |
| 18 | 130489001 | BUTTONING FOOT | |
| 19 | X55260153 | SPOOL PRESSER C | |
| 20 | X59296151 | TWIN NEEDLE (1PC) | |
| 21 | XC7701051 | ACCESSORY TRAY | |
| 22 | XC8155051 | SPONGE | |
| 23 | XA4322001 | QUILTING FOOT | |
| 24 | X59816103 | WALKING FOOT ASSRMBLY | |
| 25 | XA0188050 | BAG | |
| 26 | XC8156451 | W PRESSER UNIT | 050008 |
| 27 | XC8167051 | INNER ROTARY HOOK ASSY | |
| 28 | 184944001 | CHALK PEN | |
| 29 | XC1074051 | NEEDLE PLATE FIXING METAL | |
| 30 | XC3198001 | SIDE CUTTER ASSY | |
| 31 | XA6941051 | KNEE LIFTER LEVER ASSY | |
| 32 | XA9940051 | TOUCH PEN | |
| 33 | XC8619051 | EXTRA SPOOL PIN | |
| 34 | X57045051 | SPOOL FELT | |
| 35 | XC6052051 | POWER SUPPLY CORD:UL CSA-LF (U.S.A., CAN) | |
| | XA0070151 | POWER SUPPLY CORD | |
| | X59354151 | POWER SUPPLY CORD –BS (U.K.) | |
| | XC9548051 | POWER SUPPLY CORD : SAA-LF | ADD |
| 36 | XC8897051 | USB I/F CORE CABLE | |
| 37 | XC8362051 | STRAIGHT NEEDLE PLATE A ASSY | |
| 38 | XA9939051 | NEEDLE PLATE COVER | |
| 39 | XC8449051 | CORD GUIDE COVER | |

| No. | CODE | NAME | REMARKS |
|---|---|---|---|
| 40 | XC8661051 | BOBBIN GUIDE SET (U.S.A.) | |
| 41 | XC8450051 | BOBBIN GUIDE (U.S.A.) | |
| 42 | X60838051 | BAG,70X110C (U.S.A.) | |
| | | PACKING MATERIALS | |
| 43 | XC8175050 | CARTON | |
| 44 | XC8176050 | POLYSTYRENE FOAM PAD ASSY,BODY | |
| 45 | XC8179050 | POLYSTYRENE FOAM PAD ASSY,CASE | |
| 46 | XC8535051 | BAG,800X600T | |
| 47 | XC8185151 | CARTON | |
| | XC8690051 | CARTON (NV4000) | |
| 48 | XC8186050 | PAD D | |
| 49 | XC9671150 | POLYSTYRENE FOAM PAD, ES | 040246 |
| 50 | XC9562050 | OVER CARTON POLYSTYRENE B | |
| 51 | XC8617050 | CORD PAD D | |
| 52 | X57847051 | PLUG LABEL (U.K.) | |
| 53 | XC9195050 | SHUTTLE SUPPORT POLYSTYRENE | |
| 54 | XZ0400150 | SIDE PAD D | |
| 55 | XZ0402050 | SHEET, 150X530 | |
| 56 | XZ0393050 | PAD D MIDDLE | 040216 |
| | | PRINTED MATTER | |
| | XC8170051 | INSTRUCTION BOOK (English) | |
| | XC8408051 | INSTRUCTION BOOK (French) | |
| | XC8487051 | INSTRUCTION BOOK (German) | |
| | XC8695051 | INSTRUCTION BOOK (Dutch) | |
| | XC8696051 | INSTRUCTION BOOK (Spanish) | |
| | XC8697051 | INSTRUCTION BOOK (Italian) | |
| | XC8171051 | INSTRUCTION BOOK DISNEY (NV4000D) | |
| | XC8945051 | WARRANTY CARD T (U.S.A.) | |
| | UH385100 | WARRANTY CARD EUR | |
| | XC6402051 | WARRANTY CARD (U.K.) | |
| | XA6351151 | WARRANTY CARD (ITA) | |
| | XC7528051 | G.LEAFLET 12 | |
| | X81264051 | G.LEAFLET NO.24 (NV4000D: GER, U.K., FRA, SPA, ITA, SWISS, SING, AUSTRALIA) | |
| | XC7461051 | EMBROIDERY THREAD CATALOG | |
| | XC7460051 | ACCESSORY LEAFLET | |
| | XC8173051 | QUICK REFERENCE GUIDE | |
| | XC1625051 | BOUTIQUE INSERTION | |
| | 181401172 | INSERTION WARRANTY COUPON (NV4000D: CAN) | |

# (8) ATTACHMENTS / PACKING MATERIALS / PRINTED MATTER

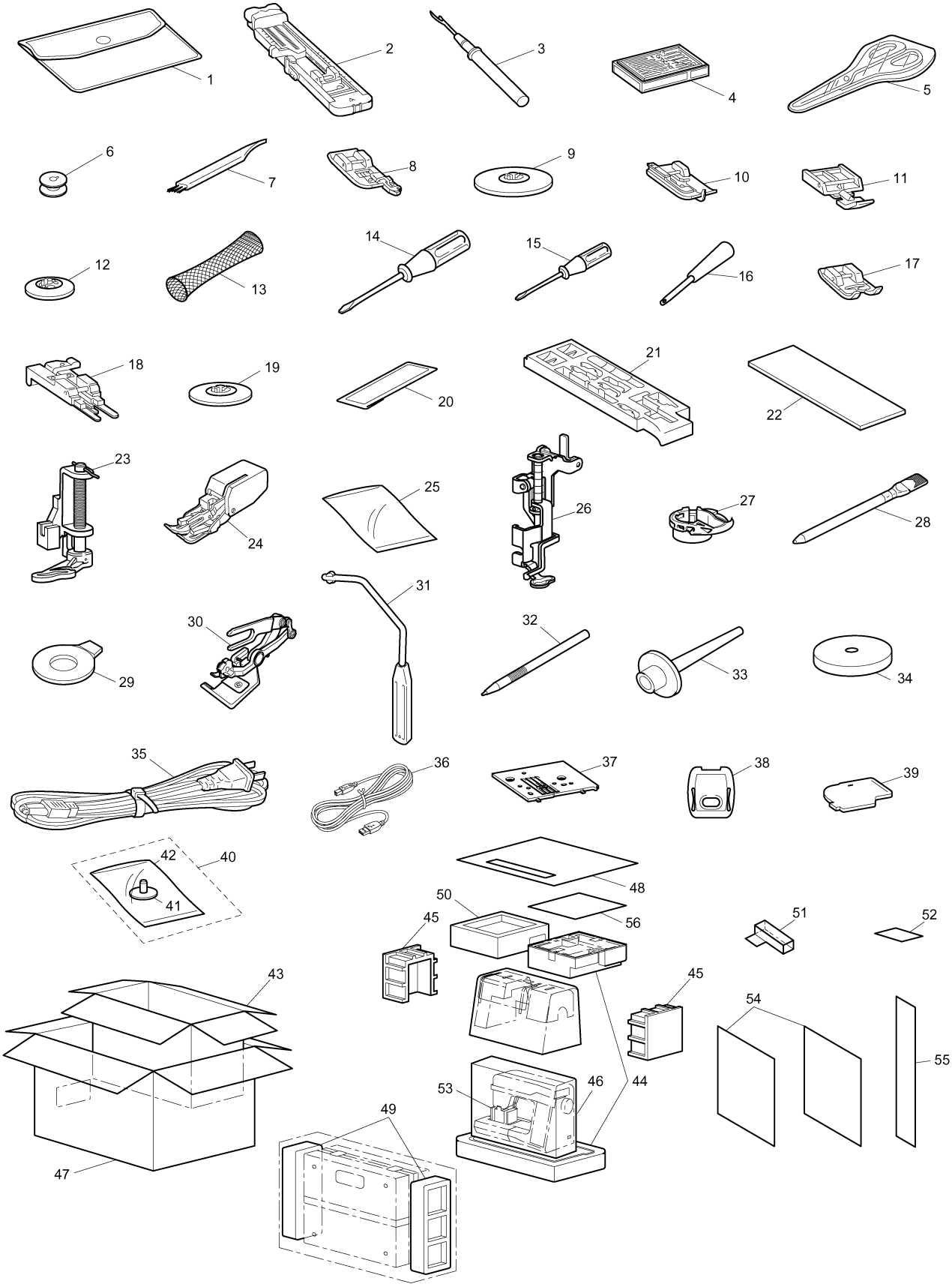

# (8) ATTACHMENTS / PACKING MATERIALS / PRINTED MATTER

| No. | CODE | NAME | REMARKS |
|---|---|---|---|
| | XC9124051 | DISNEY CARDS CATALOG 6<br>(NV4000D: U.S.A.) | |
| | XC9125051 | PACESETTER THREAD SPEC SHEET<br>(NV4000D: U.S.A.) | |
| | XC8488051 | SHEET OF LANGUAGE SETTING D6<br>(GER, U.K., FRA, AUSTRIA, SPA, ITA,<br>SWISS), (NV4000D: SING, AUSTRALIA) | |
| | XC9296051 | INSERTION A | |
| | XC9297051 | INSERTION B | |
| | XC9803051 | V-UP INSTRUCTION SHEET | 040205 |
| | XD0267051 | INSTRUCTION CD<br>(NV4000D: DEN, SWE) | ADD |

# (8) ATTACHMENTS / PACKING MATERIALS / PRINTED MATTER

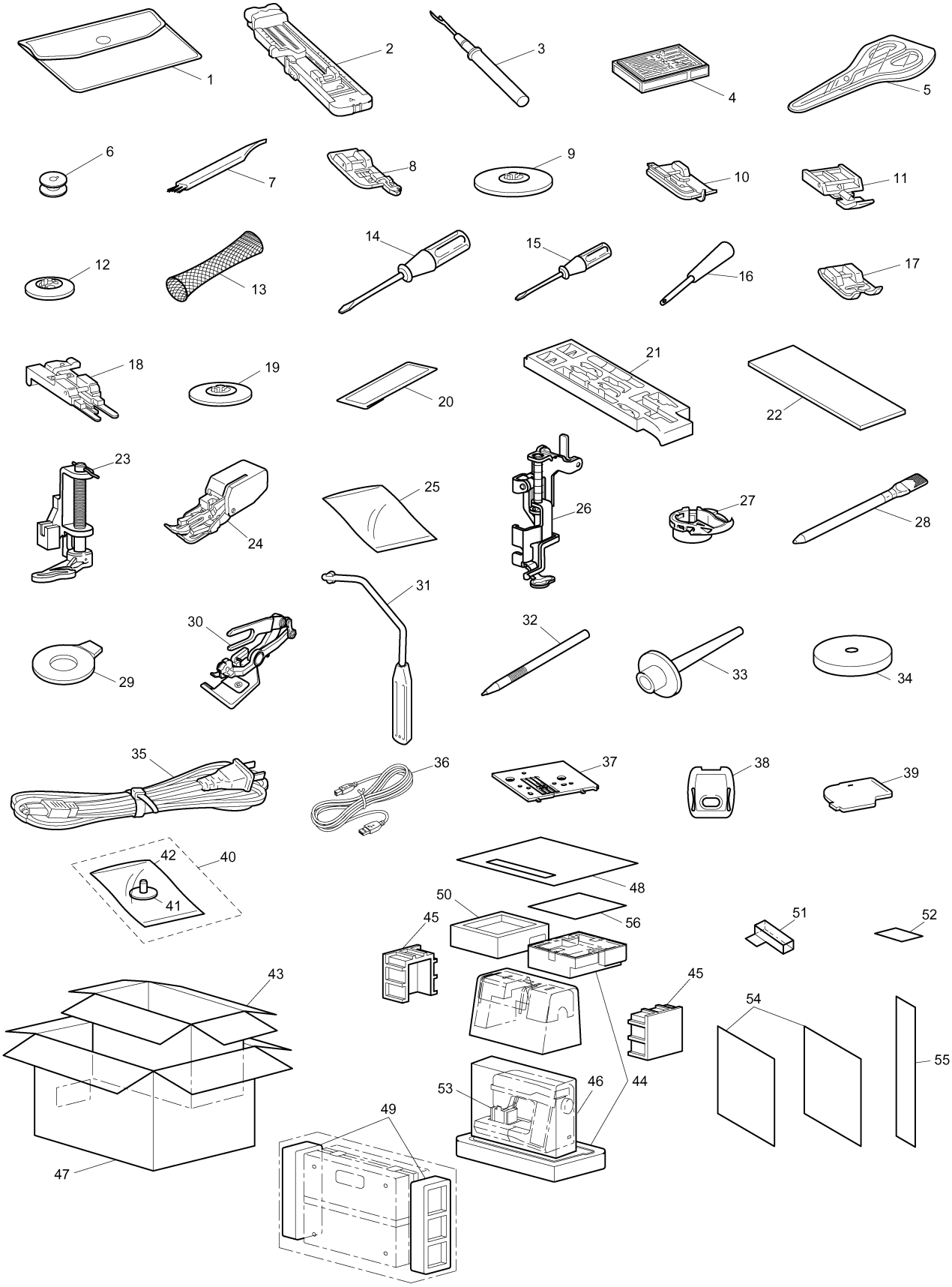

# NEEDLE-PRESSER MODULE

| No. | CODE | NAME | REMARKS |
|---|---|---|---|
| 1 | XC8275051 | UPPER SHAFT HOLDER ASSY | |
| 2 | XC7568051 | SCREW, PAN(S/P WASHER)M4X14 | |
| 3 | XC2398020 | SHAFT BUSHING A | |
| 4 | XC2399021 | PRESSER BAR BUSHING | |
| 5 | 136681051 | TAPTITE, BIND B M3X8 | |
| 6 | XC5362050 | PLATE SPRING | |
| 7 | XC7784051 | THREAD TAKE-UP COUNTER WEIGHT | |
| 8 | 012500532 | SET SCREW SOCKET (FT) M5X5 | |
| 9 | XC7785051 | UNIT SHAFT | |
| 10 | 131976050 | WASHER,THRUST | |
| 11 | 048080346 | RETAINING RING E8 | |
| 12 | XC7786051 | NEEDLE BAR SUPPORTER ASSY | |
| 13 | XC7793051 | HOOK RELEASE PLATE | |
| 14 | 060260516 | SCREW BIND M2.6X5 | |
| 15 | XC3446051 | RELEASE LEVER | |
| 16 | XC3447051 | RELEASE LEVER SHAFT | |
| 17 | 048025346 | RETAINING RING E2.5 | |
| 18 | XC3448051 | RELEASE LEVER SPRING | |
| 19 | 137977051 | POLYESTER SLIDER | |
| 20 | 0A2300606 | SCREW PAN (P WASHER) M3X6 | |
| 21 | XC8485051 | SPRING | |
| 22 | XC7794051 | HOOK ASSY | |
| 23 | XC2419021 | SHAFT | |
| 24 | 000020415 | SCREW BIND M2X4 | |
| 25 | XC2420050 | SHAFT | |
| 26 | XC2421121 | PLATE | |
| 27 | 060300516 | SCREW BIND M3X5 | |
| 28 | XC7799051 | NEEDLE BAR | |
| 29 | XC8654051 | NEEDLE BAR THREAD GUIDE | |
| 30 | X53053052 | SCREW SM2.38 | |
| 31 | XC2426020 | NEEDLE THREAD PLATE | |
| 32 | XC3554051 | NEEDLE BLOCK | |
| 33 | XZ0388051 | NEEDLE CLAMP SCREW | |
| 34 | XC4162021 | NEEDLE BLOCK SUPPORTER | |
| 35 | XC8655051 | SUPPORT SPRING | |
| 36 | 014401232 | SET SCREW SOCKET (CP) M4X12 | |
| 37 | X56851051 | LOCK NUT | |
| 38 | XC2429021 | SPRING | |
| 39 | XZ0394051 | NEEDLE BAR CRANK ROD ASSY | |
| 40 | 132051052 | SCREW, FLAT SM3.57-40X7 L | |
| 41 | 012500532 | SET SCREW SOCKET (FT) M5X5 | |
| 42 | XC2434021 | NEEDLE THREAD BLOCK | |
| 43 | 012400432 | SET SCREW SOCKET (FT) M4X4 | |
| 44 | XC2435020 | ZIGZAG ADJUSTING NUT | |

| No. | CODE | NAME | REMARKS |
|---|---|---|---|
| 45 | 018301032 | BOLT SOCKET M3X10 | |
| 46 | XC2748021 | SPRING-Z | |
| 47 | XC7802051 | NEEDLE HOLDER BROCK | |
| 48 | XC7803051 | H SHAFT HOLDER ASSY | |
| 49 | XC8374051 | SHAFT | |
| 50 | 014300532 | SET SCREW SOCKET (CP) M3X5 | |
| 51 | XC2441021 | SPRING | |
| 52 | XC7805151 | THREAD TAKE-UP LEVER | DEL |
| 53 | XC2443020 | THREAD TAKE-UP LEVER LINK | |
| 54 | XC7806051 | PRESSER BAR | |
| 55 | 048050346 | RETAINING RING E5 | |
| 56 | XC7807051 | PRESSER BAR CLAMP ASSY | |
| 57 | 014501032 | SET SCREW SOCKET (CP) M5X10 | |
| 58 | XC7810051 | SPRING | |
| 59 | XC7811050 | PRESSER FOOT RACK | |
| 60 | XC3015051 | PRESSER FEED HOLDER ASSY | |
| 61 | XA4813051 | SCREW | |
| 62 | XC3021051 | Z FOOT | |
| 63 | XC7812051 | PRESSER FOOT LIFTER | |
| 64 | XC2452021 | PRESSER LIFT SHAFT | |
| 65 | XC7813051 | SPRING | |
| 66 | 048040346 | RETAINING RING E4 | |
| 67 | XC2453051 | LEVER GUIDE SHAFT | |
| 68 | XC7814051 | LEVER AB | |
| 69 | XC7815051 | NEEDLE THREADER DRIVING PLATE | |
| 70 | XC7816051 | SPRING | |
| 71 | XC7817051 | LEVER SUPPORTER PLATE | |
| 72 | 138433051 | TAPTITE,PAN B M3X6 | |
| 73 | XC7787051 | BH SWITCH ASSY | |
| 74 | XZ0149051 | TAPTITE,PAN B 4X12 | |
| 75 | XC7818150 | Z ZIGZAG CAM | 050020 |
| 76 | XC7819051 | Z ZIGZAG LEVER ASSY | |
| 77 | XC2480020 | Z LEVER CUP | |
| 78 | XC8225051 | ASSY:ZPM LEAD WIRE | |
| 79 | X59629051 | TAPTITE,BIND B M3X10 | |
| 80 | XC2483020 | T CAM | |
| 81 | XC7822051 | TENSION RELEASE ROD ASSY | |
| 82 | XC5985051 | THREAD RELEASE LEVER ASSY D6 | |
| 83 | XC7824051 | ADJUSTING PLATE ASSY | |
| 84 | XC7826051 | TENSION RELEASE PLATE C | |
| 85 | 048030346 | RETAINING RING E3 | |
| 86 | 085411015 | TAPTITE BIND B M4X10 | |
| 87 | XC3037051 | SCREW3X10 | 040219 |
| 88 | XC2475051 | SHAFT | |

# NEEDLE-PRESSER MODULE

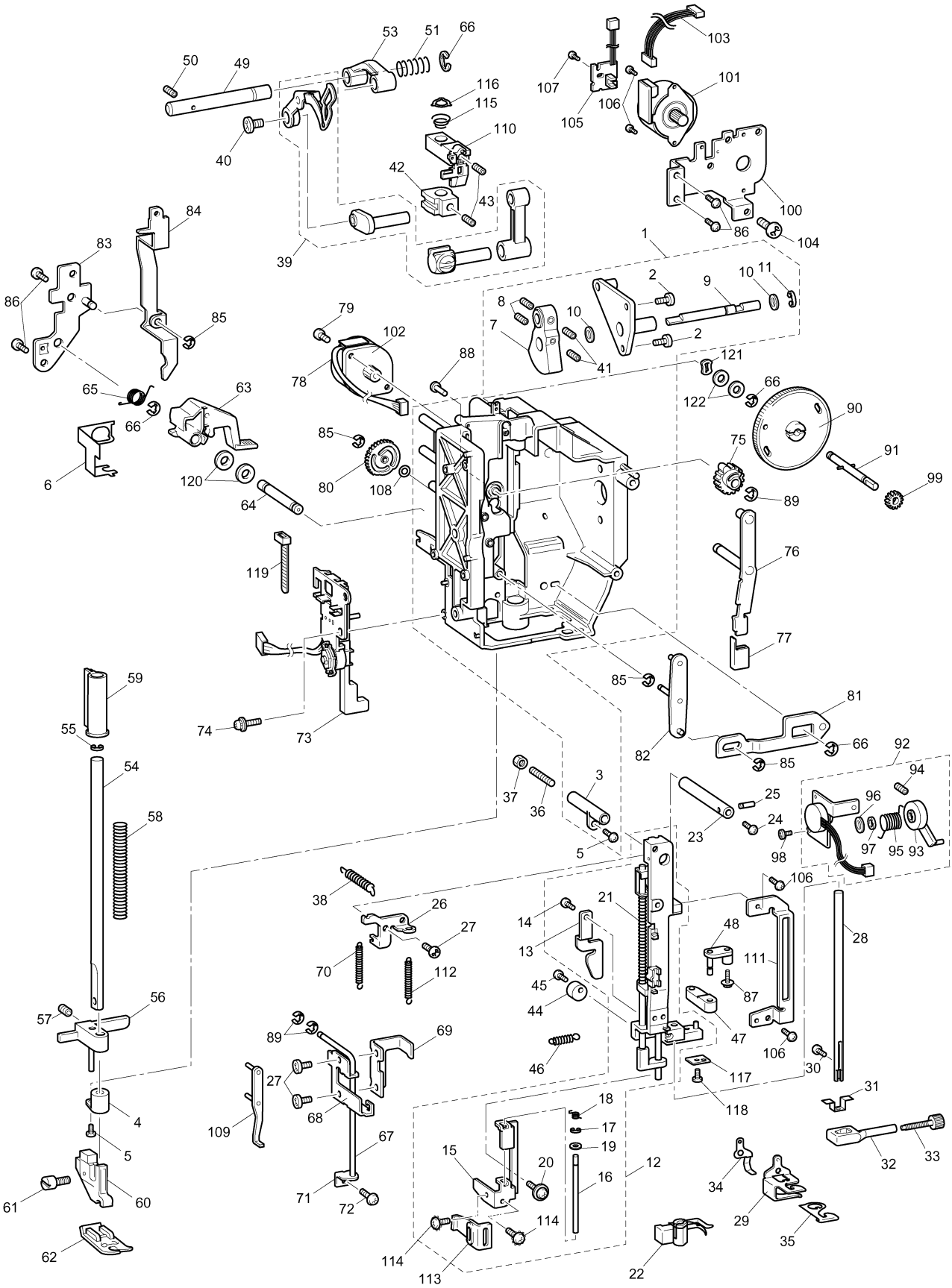

# NEEDLE-PRESSER MODULE

| No. | CODE | NAME | REMARKS |
|---|---|---|---|
| 89 | 048020346 | RETAINING RING E2 | |
| 90 | XC7827051 | PRESSER DIAL | |
| 91 | XC8372051 | PRESSER DIAL SHAFT ASSY | |
| 92 | XC7828051 | PT HOLDER ASSEMBLY | |
| 93 | XA6493051 | PT LEVER | |
| 94 | 012300632 | SET SCREW SOCKET (FT) M3X6 | |
| 95 | XA1894051 | SPRING | |
| 96 | 026060235 | WASHER PLAIN M 6 | |
| 97 | X52569001 | NUT | |
| 98 | 136681051 | TAPTITE, BIND B M3X8 | |
| 99 | XC7830050 | PRESSER DIAL GEAR | |
| 100 | XC7831151 | PRESSER PM HOLDER | 040208 |
| 101 | XC8228051 | ASSY:PF PULSE MOTOR | |
| 102 | XC8678051 | ZPM INSULATION ASSY | |
| 103 | XC8229051 | ASSY:PFPM LEAD WIRE | |
| 104 | 060400616 | SCREW BIND M4X6 | |
| 105 | XC8230051 | ASSY:ATPF INIT PCB | |
| 106 | 060300616 | SCREW BIND M3X6 | |
| 107 | XC7644051 | SCREW, PAM (S/P WASHER) M3X5 | |
| 108 | XZ0155051 | POLYESTER SLIDER | |
| 109 | XC6241151 | RELEASE PLATE ASSY | 040225 |
| 110 | XC6245051 | NEEDLE BAR HOOK STAND ASSY | |
| 111 | XC6251051 | RELEASE GUIDE PLATE | |
| 112 | XC6252051 | SPRING | |
| 113 | XC6253050 | RELEASE ADJUSTER | |
| 114 | XC4433051 | SCREW,PAN(T WASHER)M3X6 | |
| 115 | XC6254051 | NEEDLE BAR PRESSER SPRING | |
| 116 | XC6255050 | WASHER,THRUST | |
| 117 | XC7832051 | ADJUST PLATE | |
| 118 | 060260516 | SCREW BIND M2.6X5 | |
| 119 | X53169050 | BAND | |
| 120 | XA1860150 | WASHER | |
| 121 | 103810052 | WASHER, WAVE SPRING | |
| 122 | XA0362051 | WASHER | |
| | | | |
| | XC8672151 | NEEDLE SUPPLY UNIT ASSY (EU) | 050020 |
| | XC8672152 | NEEDLE SUPPLY UNIT ASSY (U.S.A., CAN) | 050020 |
| | | | |
| | | | |
| | | | |
| | | | |
| | | | |

# NEEDLE-PRESSER MODULE

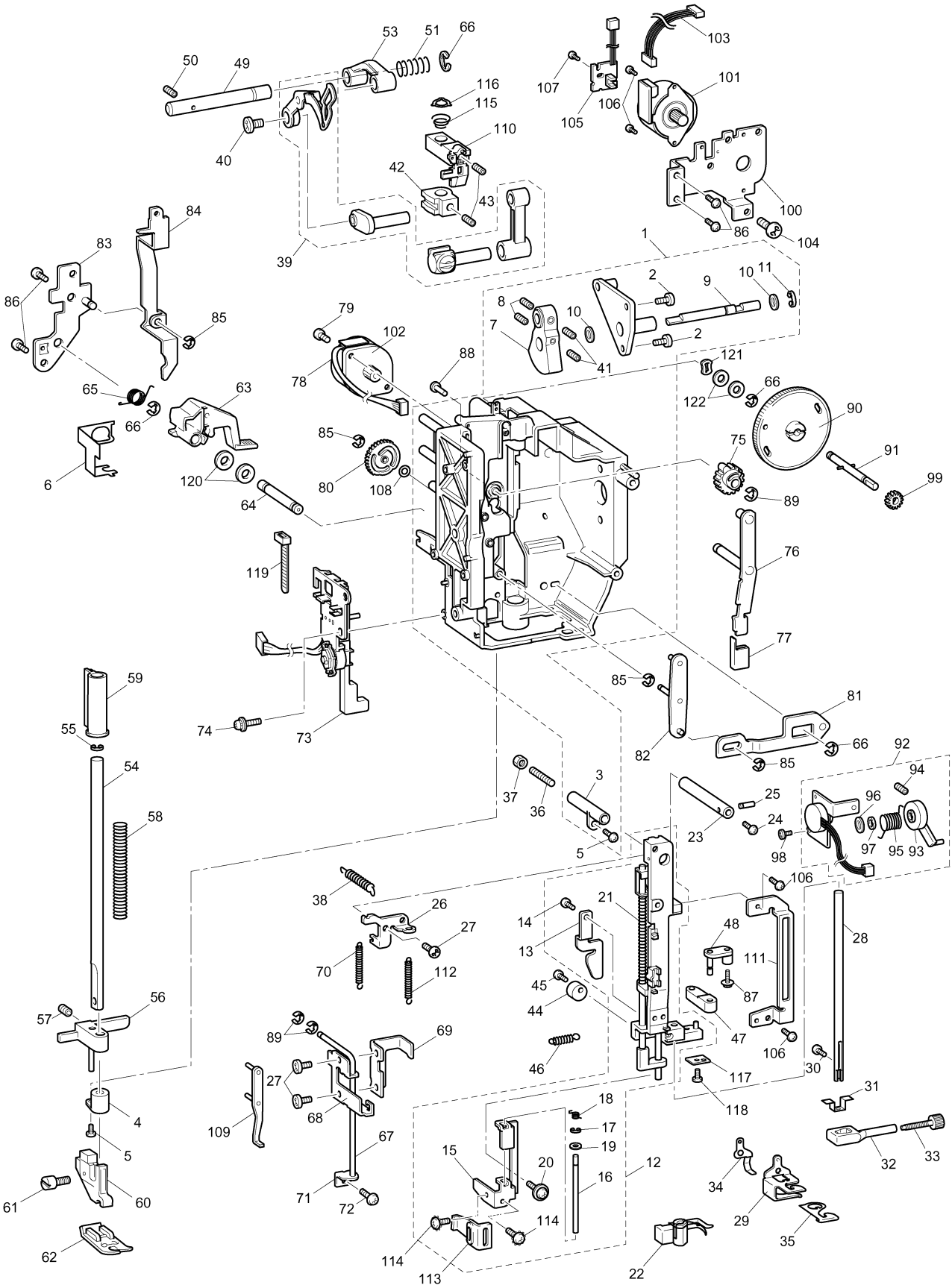

# FEED MODULE

| No. | CODE | NAME | REMARKS |
|---|---|---|---|
| 1 | XC7638051 | BASE PLATE | |
| 2 | XC7837051 | F GEAR STOPPER PLATE | |
| 3 | 060400416 | SCREW, BIND M4X4 | |
| 4 | XC7841151 | FEED BAR ASSY | |
| 5 | XC7842151 | FEED BAR | |
| 6 | XC8530051 | FEED DOG BASE ASSY | |
| 7 | XC7846051 | FEED DOG | |
| 8 | 060300616 | SCREW BIND M3X6 | |
| 9 | XC7847051 | FEED DOG CORRECTION PLATE | |
| 10 | XC3338021 | SCREW3X8 | |
| 11 | XC7848051 | FEED DOG BASE SHAFT A | |
| 12 | 137999050 | POLYESTER SLIDER | |
| 13 | 014400432 | SET SCREW SOCKET (CP) M4X4 | |
| 14 | XC7849051 | FEED DOG BASE SHAFT B | |
| 15 | 012400432 | SET SCREW SOCKET (FT) M4X4 | |
| 16 | XC2512051 | FEED BAR SHAFT A | |
| 17 | XC8337021 | FEED ARM A | |
| 18 | XC2517021 | FEED ARM B ASSY | |
| 19 | XC2521021 | FEED SUPPORTING PLATE ASSY | |
| 20 | 048020346 | RETAINING RING E2 | |
| 21 | 048030346 | RETAINING RING E3 | |
| 22 | 137999050 | POLYESTER SLIDER | |
| 23 | XC9277051 | SPRING | |
| 24 | XC7835051 | HORIZONTAL FEED SHAFT | |
| 25 | XC8195051 | SHAFT STOPPER PLATE | |
| 26 | 048050346 | RETAINING RING E5 | |
| 27 | X50546050 | WASHER,THRUST | |
| 28 | 130676151 | SET SCREW COLLAR | |
| 29 | XC2527021 | FEED ADJUSTER | |
| 30 | XC2529020 | F GEAR | 040176 |
| 31 | XC2530021 | SPRING | 040176 |
| 32 | 137713050 | POLYESTER SLIDER | |
| 33 | XC2531021 | SPRING | |
| 34 | XZ0397051 | FPM HOLDER ASSY | |
| 35 | XC9759051 | FPM INSULATION ASSY | 040203 |
| 36 | XC8236051 | ASSY:FPM LEAD WIRE | |
| 37 | XC2587050 | RUBBER | |
| 38 | 060300516 | SCREW BIND M3X5 | |
| 39 | XC3338021 | SCREW3X8 | |
| 40 | 018402532 | BOLT SOCKET M4X25 | |
| 41 | XC2537021 | SPRING | |
| 42 | XC2538021 | SPRING | |
| 43 | XC2539021 | BUSHING SUPPORTER ASSY | |
| 44 | 060400616 | SCREW BIND M4X6 | |

| No. | CODE | NAME | REMARKS |
|---|---|---|---|
| 45 | XC2542021 | BUSHING PRESSER B | |
| 46 | 060300516 | SCREW BIND M3X5 | |
| 47 | 012401032 | SET SCREW SOCKET (FT) M4X10 | |
| 48 | XC7853150 | CAP | |
| 49 | XC7854051 | VERTICAL ROD | |
| 50 | X56851051 | LOCK NUT | |
| 51 | XZ0385051 | SPRING | |
| 52 | XC8361051 | VERTICAL FEED SHAFT | |
| 53 | XC7856051 | SPRING | |
| 54 | XC7857050 | FEED DOG CORRECTION LEVER | |
| 55 | XC7858050 | VERTICAL LEVER | |
| 56 | XC2552051 | SET SCREW COLLAR | |
| 57 | 014400432 | SET SCREW SOCKET (CP) M4X4 | |
| 58 | 048030346 | RETAINING RING E3 | |
| 59 | XC7859051 | VERTICAL SUPPORTING PLATE | |
| 60 | 137713050 | POLYESTER SLIDER | |
| 61 | XC2210051 | OUTER ROTALY HOOK ASSY | |
| 62 | X58913052 | BIND 2X3 | |
| 63 | XC2230051 | OUTER ROTARY HOOK SHAFT | |
| 64 | 137805052 | SPACER | |
| 65 | 137976051 | WASHER 6 | |
| 66 | 014400632 | SET SCREW SOCKET (CP) M4X6 | |
| 67 | XC8406151 | INNER ROTARY HOOK BRACKET ASSY | |
| 68 | X58913051 | BIND 2X3 | |
| 69 | XC8350051 | PHOTO DIODE HOLDER ASSY | |
| 70 | XC8240051 | ASSY:PLTSW D6 | |
| 71 | XC7865050 | NEEDLE PLATE SW HOLDER | |
| 72 | XC7866151 | CORD HOLDER | |
| 73 | 060260316 | SCREW BIND M2.6X3 | |
| 74 | 000020415 | SCREW BIND M2X4 | |
| 75 | XZ0181021 | STOPPER PLATE BLOCK ASSY | |
| 76 | 060400516 | SCREW BIND M4X5 | |
| 77 | 060300816 | SCREW BIND M3X8 | |
| 78 | XC7867051 | LOWER SHAFT B ASSY | |
| 79 | X52664050 | LOWER SHAFT BUSHING | |
| 80 | X51383050 | WASHER,THRUST | |
| 81 | 048060346 | RETAINING RING E6 | |
| 82 | 137768151 | SET SCREW COLLAR | |
| 83 | 014400432 | SET SCREW SOCKET (CP) M4X4 | |
| 84 | XC2566021 | BUSHING SUPPORTER A | |
| 85 | XC2567021 | BUSHING PRESSER A | |
| 86 | 060401616 | SCREW BIND M4X16 | |
| 87 | XC7872151 | NEEDLE PLATE A | 040226 |
| 88 | XC2570021 | STOPPER PLATE | |

# FEED MODULE

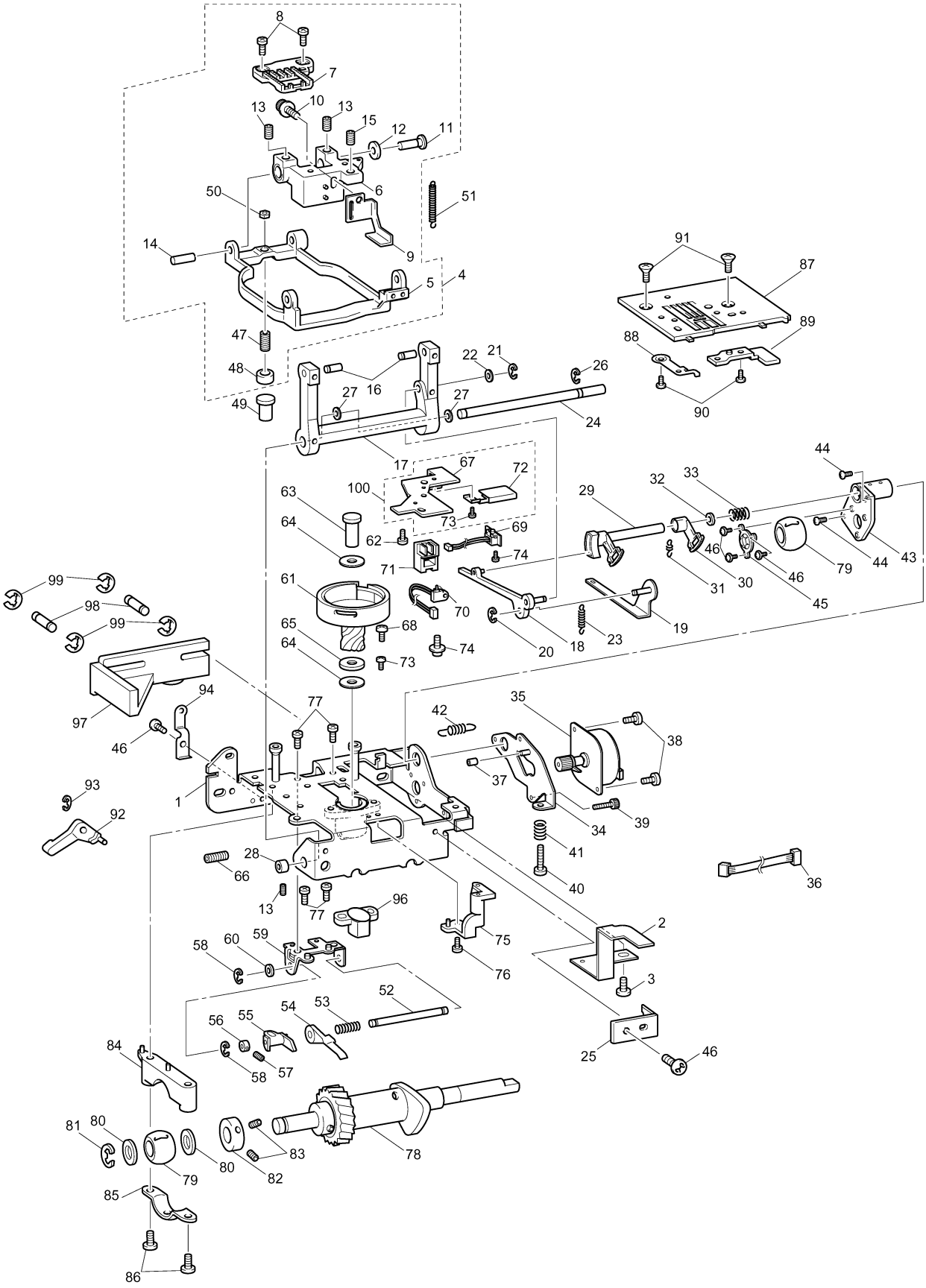

8
7
10
13
13
15
12
11
6
50
51
14
9
5
4
91
87
89
88
90
47
48
49
16
22
21
26
27
27
24
17
67
72
100
63
64
73
69
62
74
71
29
32
33
44
46
31
30
46
79
44
43
45
61
70
19
20
18
23
99
98
99
65
68
64
74
73
94
97
77
42
35
38
46
37
93
1
92
34
39
41
28
66
40
36
13
77
96
75
2
58
60
59
76
3
52
53
54
56
55
84
58
57
25
46
81
80
83
78
80
79
82
85
86

# FEED MODULE

| No. | CODE | NAME | REMARKS |
|---|---|---|---|
| 89 | XC7873051 | STOPPER PLATE | |
| 90 | 060260316 | SCREW BIND M2.6X3 | |
| 91 | X50487051 | SCREW M4 | |
| 92 | XC7874050 | DROP KNOB | |
| 93 | 048030346 | RETAINING RING E3 | |
| 94 | XC7875051 | SPRING PLATE | |
| 95 | X53169050 | BAND | DEL 040221 |
| 96 | XC7862051 | VERTICAL FEED BUSH | |
| 97 | XC7877051 | DROP LEVER | 040221 |
| 98 | XC3587021 | SLIDE SHAFT A | 040221 |
| 99 | 048020346 | RETAINING RING E2 | 040221 |
| 100 | XC9987051 | I R HOOK BRACKET SUPPLY ASSY | 040222 |
| | | | |
| | | | |
| | XC8673051 | FEED SUPPLY UNIT ASSY (EU) | |
| | XC8673052 | FEED SUPPLY UNIT ASSY (U.S.A., CAN) | |

# FEED MODULE

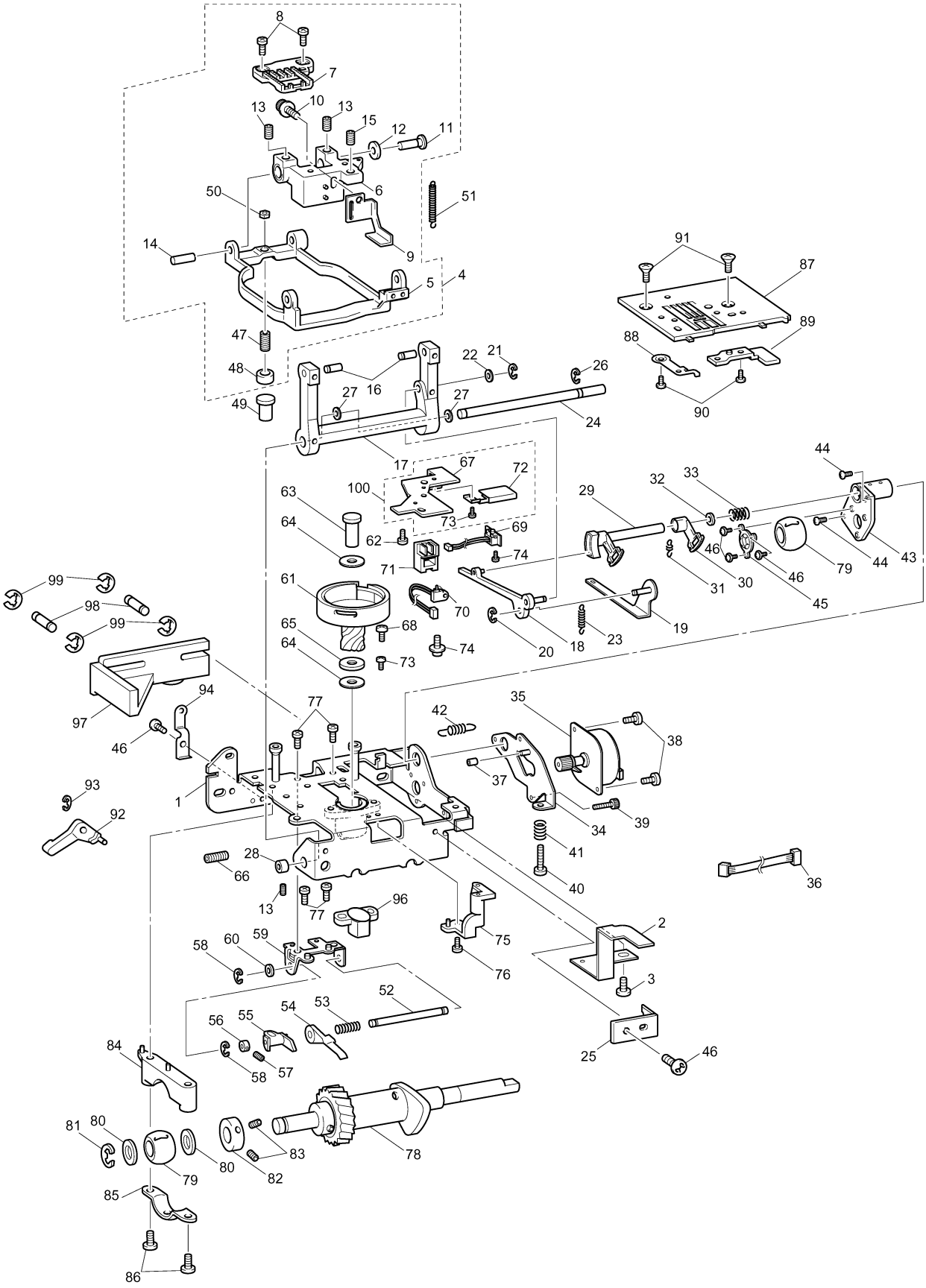

8
7
10
13
13
15
12
11
6
50
51
14
9
5
4
91
87
89
88
90
47
48
49
16
22
21
26
27
27
24
17
67
72
100
63
64
73
69
62
74
71
29
32
33
44
46
31
30
46
79
44
43
45
61
70
19
20
18
23
99
98
99
65
68
64
74
73
94
97
77
42
35
38
46
37
1
93
92
34
39
41
28
66
40
36
13
77
96
75
2
58
60
59
76
3
52
53
54
56
55
57
58
25
46
84
81
80
79
80
83
82
78
85
86

# THREAD CUTTER MODULE

| No. | CODE | NAME | REMARKS |
|---|---|---|---|
| 1 | XC2576021 | THREAD CUTTER FRAME ASSY | |
| 2 | XC2579020 | SPACER | |
| 3 | X80321001 | NT LOWER THREAD CUTTER | |
| 4 | XC2596021 | PRESSER PLATE | |
| 5 | XD0118001 | PILE 4X4 | 040244 |
| 6 | 060300416 | SCREW BIND M3X4 | |
| 7 | XC2598120 | SPRING PLATE | |
| 8 | XC2587050 | RUBBER | |
| 9 | 048030346 | RETAINING RING E3 | |
| 10 | XC2583121 | THREAD HOOK ASSY | 050013 |
| 11 | 137713050 | POLYESTER SLIDER | |
| 12 | X56731050 | WASHER | |
| 13 | 048040346 | RETAINING RING E4 | |
| 14 | XC2581121 | THREAD CUTTER LEVER | |
| 15 | XC2582020 | THREAD CUTTER LEVER GEAR | |
| 16 | 0A4300605 | SCREW PAN (S/P WASHER) M3X6 | |
| 17 | XC8416051 | MOTOR HOLDER ASSY | |
| 18 | XC2592020 | IDLE GEAR A | |
| 19 | XC2593020 | IDLE GEAR B | |
| 20 | X56323021 | SPRING | |
| 21 | 048020346 | RETAINING RING E2 | |
| 22 | XC8678051 | ZPM INSULATION ASSY | CHG |
| 23 | XC8244051 | ASSY:CPM LEAD WIRE | |
| 24 | 060300416 | SCREW BIND M3X4 | |
| 25 | XC2594051 | COLLAR | |
| 26 | 060402016 | SCREW BIND M4X20 | |
| 27 | X53169050 | BAND | |
| 28 | 137713050 | POLYESTER SLIDER | |
| 29 | XC8407050 | WAVE-SHAPE SPRING WASHER | |
| | | | |
| | XC8674251 | THREAD CUTTER SUPPLY ASSY (EU) | 050013 |
| | XC8674252 | THREAD CUTTER SUPPLY ASSY (U.S.A., CAN) | 050013 |
| | | | |
| | | | |
| | | | |
| | | | |
| | | | |
| | | | |
| | | | |
| | | | |
| | | | |
| | | | |

# THREAD CUTTER MODULE

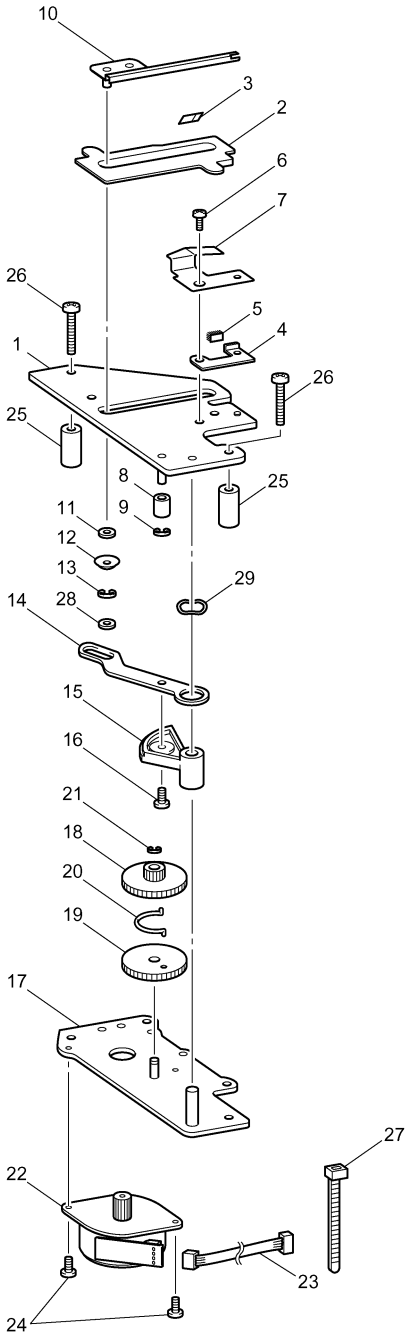

NV4000D/ NV4000
14H04HF882S90/91