SERVICE MANUAL

MC9500

JANOME

TABLE OF CONTENTS

MECHANICAL ADJUSTMENT

Changing External Parts (1) Face Cover/Top Cover 1
Changing External Parts (2) Belt Cover 2
Changing External Parts (3) Base Cover 3
Changing External Parts (4) Bed Cover/ Base Lid (2) 4
Changing External Parts (5) Base Unit 5
Changing External Parts (6) Front Cover 6
Changing External Parts (7) Rear Cover 7
Adjusting Needle Drop Position 8
Adjusting Presser Foot Position and Height 9
Adjusting Hook Timing 10
Adjusting Needle Bar Height 11
Adjusting Clearance between Needle and Hook 12
Adjusting Backlash between Hook Drive Gear and Lower Shaft Gear 13
Adjusting Feed Dog Height 14
Adjusting Upper Shaft Shield Plate Position 15
Adjusting Needle Thread Tension 16
Adjusting Tension Release Mechanism 17
Changing Thread Tension Unit 18
Adjusting Stretch Stitch Balance 19
Replacing Threader Plate and Adjustment 20
Adjusting Height of Embroidery Foot P 21

ADJUSTMENT FOR ELECTRICAL COMPONENTS

Connector Connection Diagram 22
Replacing Printed Circuit Board A 23
Replacing Touch Panel (LCD) 24
Replacing Printed Circuit Board F 25
TTP Adjusting Mode 26
Adjusting Solenoid 27
Adjusting Buttonhole Lever 28
Adjusting Presser Foot Sensor 29
Adjusting Presser Foot Lifter Sensor 30
Adjusting Remaining Bobbin Thread Sensor 31
Replacing DC Motor and Motor Belt Tension Adjustment 32
Replacing Carriage Plate (Unit) 33
Adjusting Feed Dog Up/Down Position 34
Adjusting X and Y Sensors 35
Adjusting X and Y Sensors (Simple Adjustment) 36
Adjusting X Motor Gear 37
Replacing Switching Power Supply 38

Changing External Parts (1) Face Cover/Top Cover

Replacing the face cover

To remove:

1. Remove the Cap ① and Screw (A) ② and remove the Face Cover ③ .
   ① Cap
   ② Screw (A)
   ③ Face cover

To attach:

2. Attach the Face Cover ③ and tighten Screw (A) ② , then attach the Cap ① .

Replacing the top cover

To remove:

1 Open the Top cover ① and remove Screw (B) ② .

2 Raise the carrying handle and remove Screw (C) ③ .

3 Pull out the Top cover ① to the rear side.

To attach:

4 Raise the carrying handle, insert the Top cover ① from rear side to toward you and tighten Screws (B) ②, (C) ③ to attach the Top cover ① .

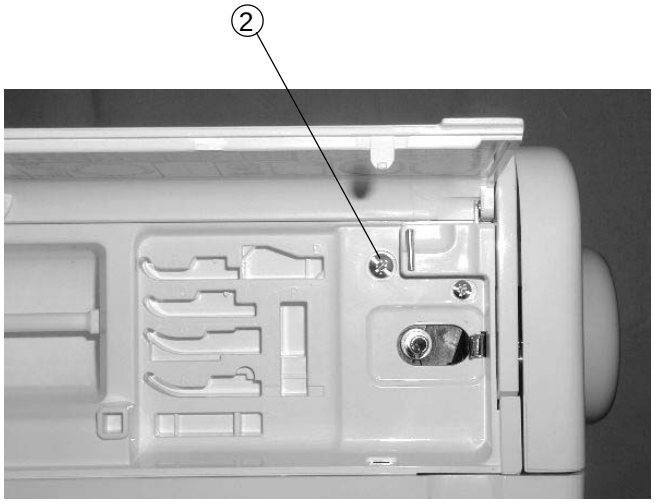

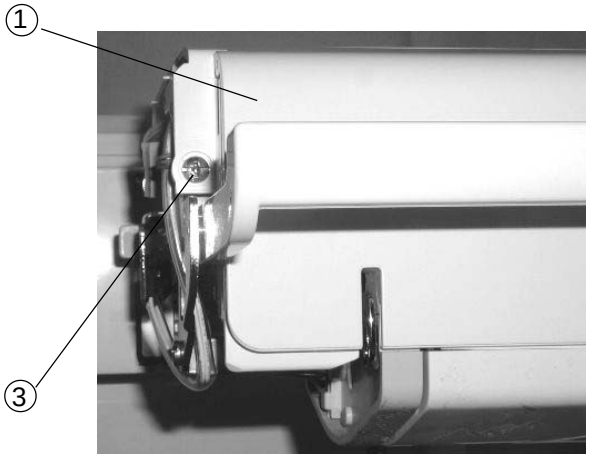

① Top cover
② Screw (B)
③ Screw (C)

Changing External Parts (2) Belt Cover

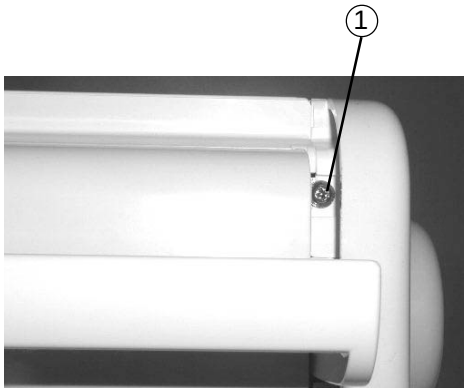

Replacing the belt cover

To remove:

1 Raise the carrying handle and remove Screw (A) ① .

2 Remove the Cap ② and remove Screw (B) ③ .

3 Lay the machine down on its back and remove Screws C ④ and D ⑤ , then remove the Belt cover ⑥ .

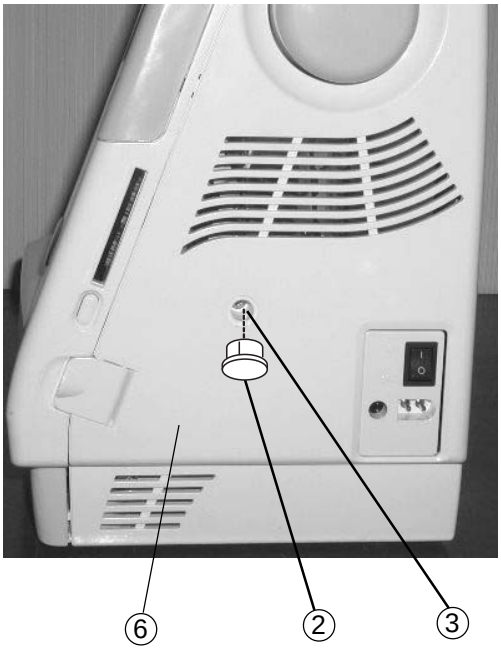

① Screw (A)
② Cap
③ Screw (B)
④ Screw (C)
⑤ Screw (D)
⑥ Belt cover

To attach:

4 Match the Belt cover ⑥ position with the front cover.

5 Attach the Belt Cover with Screws (A - D) ② -⑤ .

5. Attach the Cap ① .

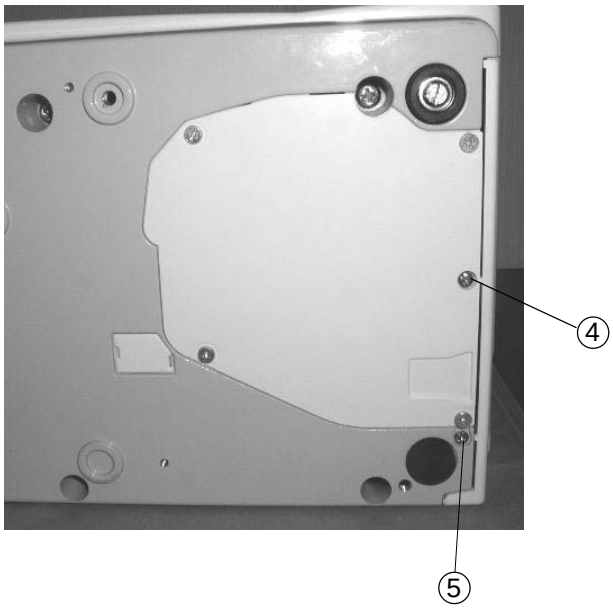

Changing External Parts (3) Base Cover

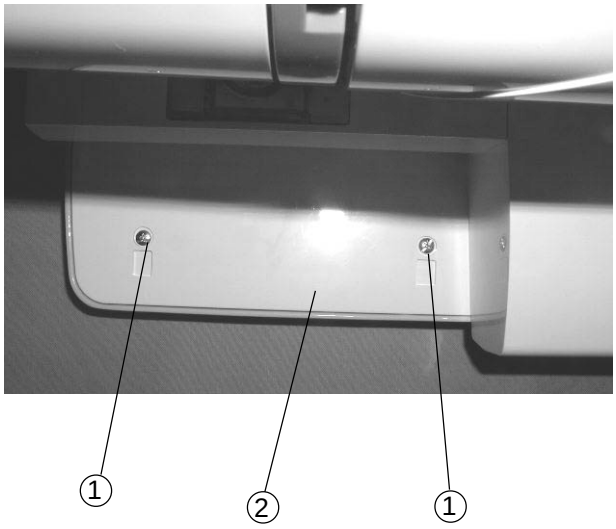

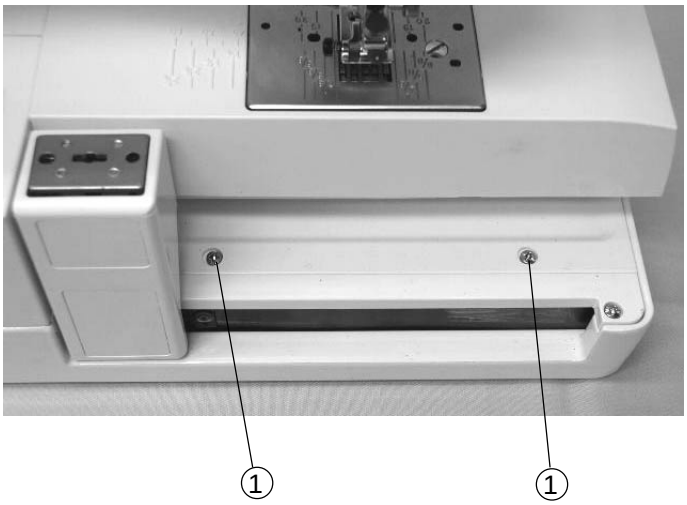

Replacing the base cover

To remove:

1 Remove Screws ① (4 pieces) to remove the base cover ②.

① Screw
② Base cover

To attach:

2 Follow the above procedure in reverse.

Changing External Parts (4) Bed Cover / Base Lid (2)

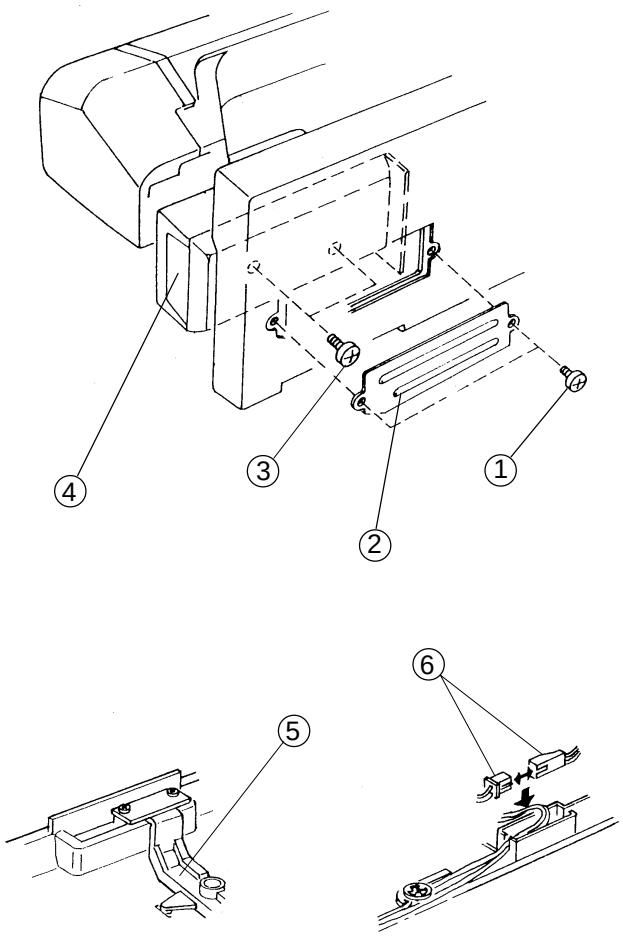

Replacing the bed cover

To remove:

1 Remove the base cover.

2 Remove Screws (A) ① (2 pcs.), and remove the Base Lid (1) ②.

3 Remove Screws (B) ③ (2 pcs.), and remove the Bed cover ④.

4 Disconnect the connectors ⑥.

① Screws (A)
② Base lid (1)
③ Screws (B)
④ Bed cover
⑤ Drop feed lever
⑥ Connectors

To attach:

5 Follow the above procedure in reverse.

* Set the Drop feed lever ⑤ as shown, place the mated connectors ⑥ in the bed cover.

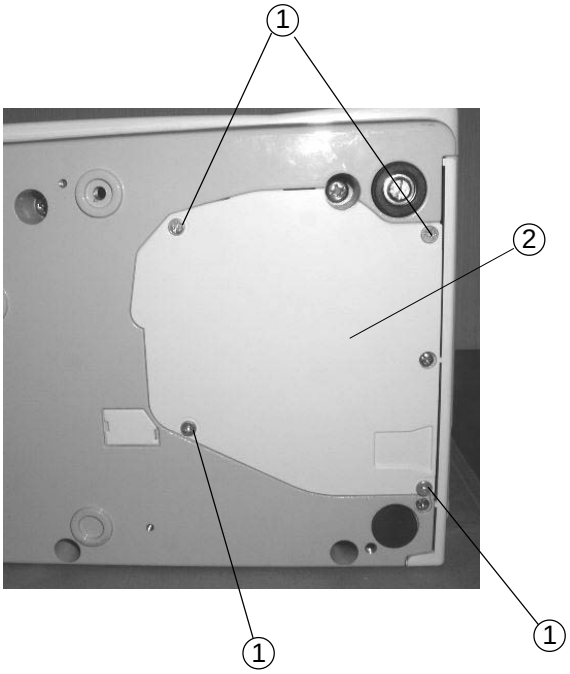

Replacing the base lid (2)

To remove:

1 Remove Screws ① (4 pieces), and remove the Base lid (2) ②.

① Screw
② Base lid (2)

To attach:

2 Follow the above procedure in reverse.

Changing External Parts (5) Base Unit

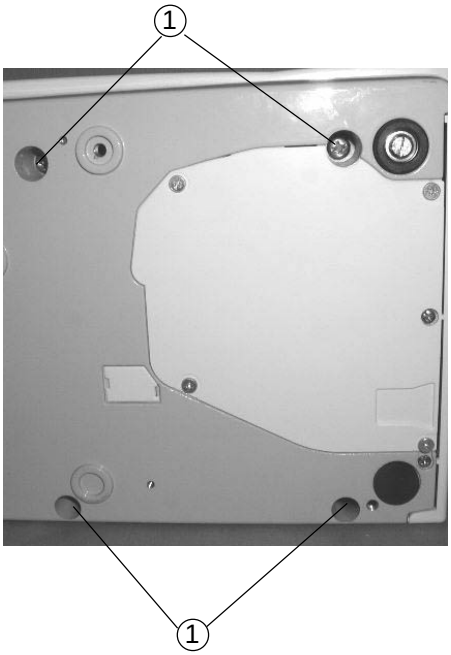

Base

To remove:

1 Remove the Belt cover. (See page 2)

2 Remove Screw (A) ① (4 pcs.), and remove the base unit .

3 Disconnect the X Motor ② and Y Motor ③ Connectors from the printed circuit board A.

① Screws (A)
② X-motor connector (Blue)
③ Y- motor connector (White)
④ Extension table (Accessory)

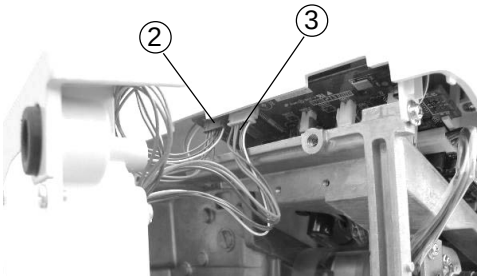

To attach:

4 Connect the X, Y-Motor connectors ② ,③ to the printed circuit board A.

5 Insert the X,Y-Motor cords between the printed circuit board A and Arm.
Make sure that the cords should not be caught between the arm and base unit when attaching it, then tighten Screw ① (4 pieces) temporarily.

6 Attach the Extension (Accessory) table ④ .

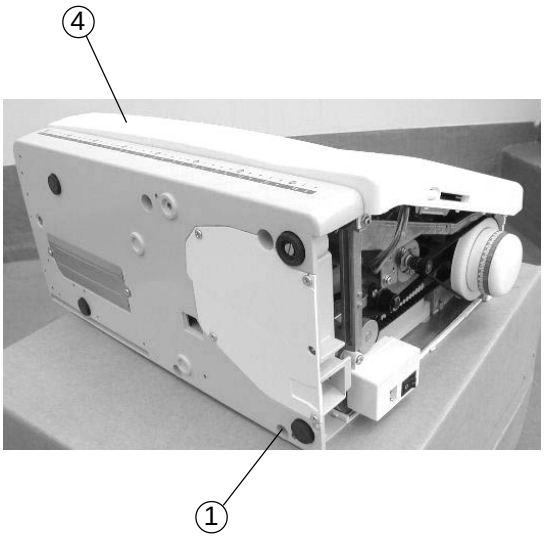

7 Tighten Screws (A) ① while aligning the extension table, base unit and free Arm.

8 Attach the belt cover.

Changing External Parts (6) Front Cover

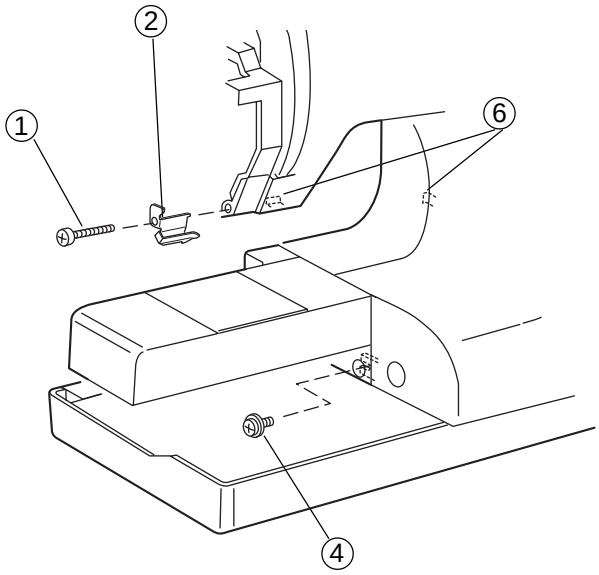

Front cover

To remove:

1 Remove the top cover, base cover and bed cover. (See page 1 - 4).
2 Remove Screw (A) ① and remove the Arm thread guide (lower) ② .
3 Remove Screw (B) ③ .
4 Loosen Screw (C)④ , (D)⑤ .

5 Disconnect the each connector and remove the front cover.

Note: Unlock the Hooks before removing the front cover.

① Screw (A)
② Arm thread guide (Lower)
③ Screw (B)
④ Screw (C)
⑤ Screw (D)
⑥ Hooks (2 spots)

To attach:

6 Follow the above procedure in reverse.

Note: See page 22 (Diagram) for “Connectors Connection”.

Changing External Parts (7) Rear Cover

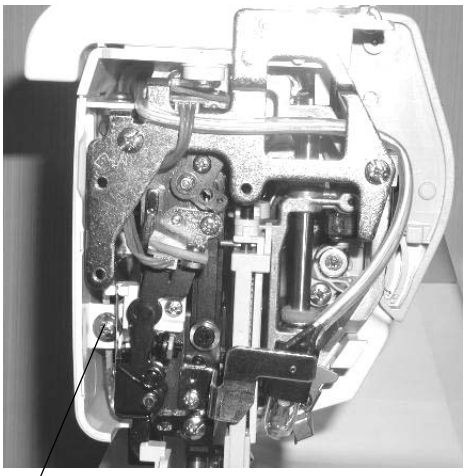

Rear cover

To remove:

1 Remove the top cover and belt cover.

2 Loosen Screws (A) ①, (B) ②, (C) ③ (D) ④ and remove the Rear cover ⑤.

① Screw (A)
② Screw (B)
③ Screw (C)
④ Screw (D)
⑤ Rear cover

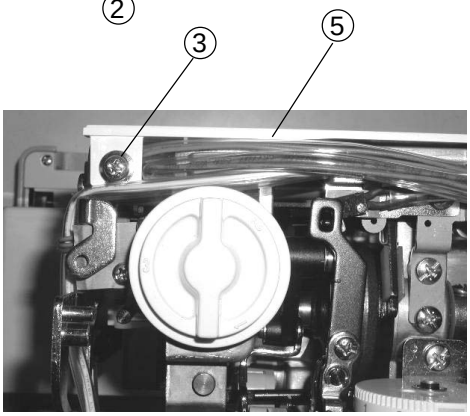

To attach:

3 Follow the above procedure in reverse.

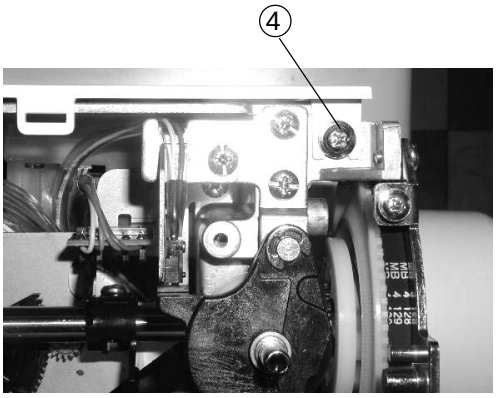

Adjusting Needle Drop Position

When the straight stitch is selected on the touch panel, the needle should be positioned in the center of the needle plate hole.
When the zigzag stitch is selected with the zigzag width set to the maximum (7.0), the clearance between the side of the needle and the edge of hole of the needle plate at the left and right needle position should be 0.2 mm or more.

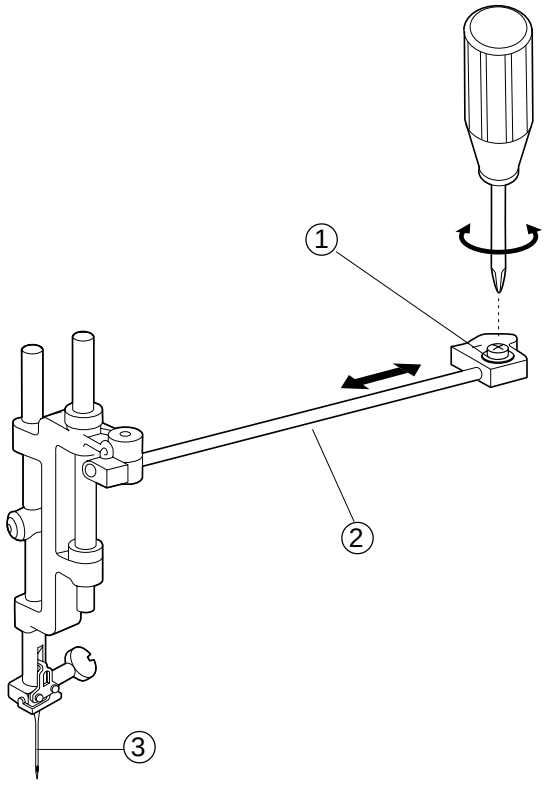

1 Remove the top cover and slect the pattern No. 1 (Straight stitch).
Lower the needle to its lowest position by turning the handwheel toward you.

2 Loosen the Screw ①.
Move the Zigzag rod ② left or right to set the needle ③ in the center of the Hole of the needle plate ④, then tighten Screw ①.

3 Select the pattern No.6 (Zigzag).
Set the zigzag width to maximum (7.0).

4 Turn the handwheel toward you to check if the clearance between the side of the needle and the edge of the Hole of the needle plate ④ , at the left and right needle position, is 0.2 mm or more ⑤ .

5 Attach the top cover.

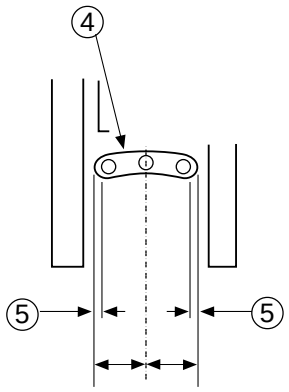

A = B

① Screw
② Zigzag rod
③ Needle
④ Needle plate hole
⑤ 0.2 mm or more

Adjusting Presser Foot Position and Height

When the presser foot is raised, the clearance between the presser foot and the needle plate should be 0.6 mm.
When the presser foot is lowered, the edge of the foot and the feed dog window on the needle plate should be parallel.

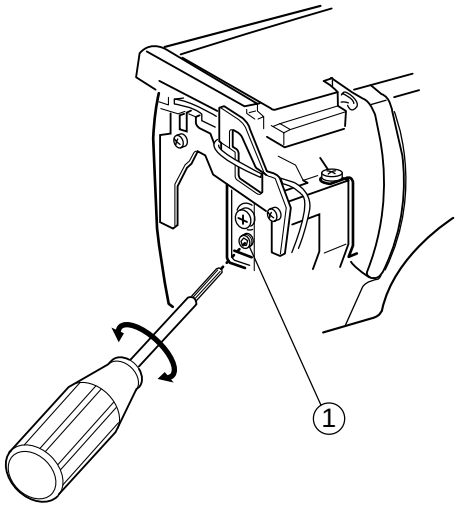

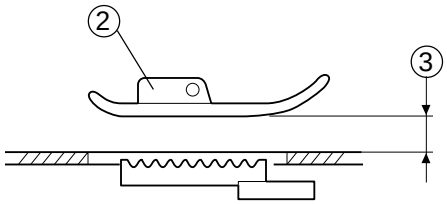

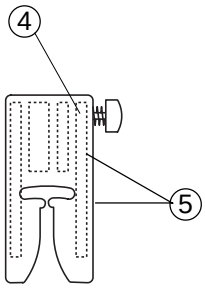

1 Remove the face cover.

2 Raise the presser foot, loosen Screw ① to adjust the presser foot position and presser foot height, then tighten screw ① .

3 Attach the face cover.

① Screw
② Presser foot
③ 6.0 mm
④ Feed dog window
⑤ Should be parallel

Adjusting Hook Timing

When the pattern No.2 is selected, the amount of ascending travel of the needle bar from its lowest position to the position where the tip of the rotary hook exactly meets the right side of the needle should be 3.25 to 3.55 mm.

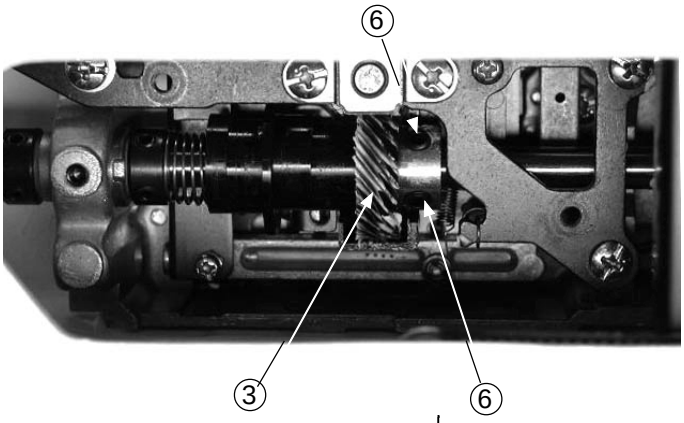

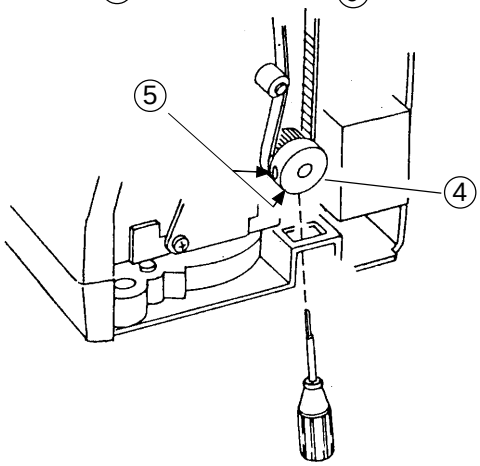

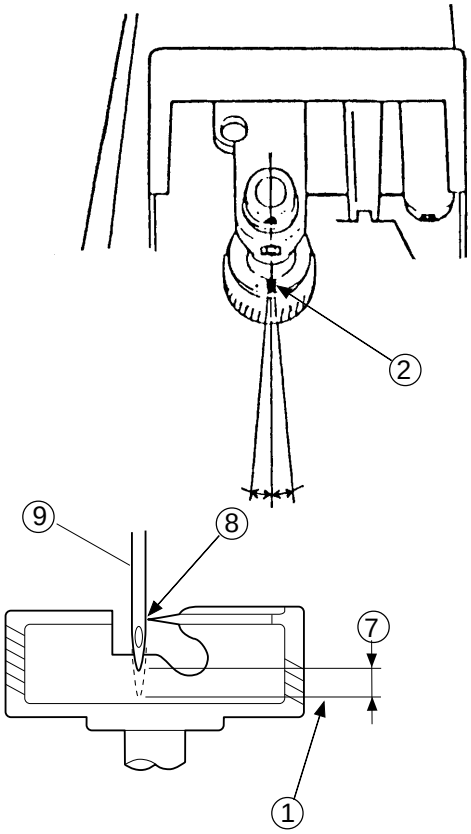

1 Remove the belt cover, bed cover, base cover, base lid (1) and base lid (2).
2 Turn the power switch “ON” and select the pattern No.2.
3 Press the “ADJUST” key and set the zigzag width at “0” by manual adjustment, then turn the power switch “OFF”.
4 Remove the presser foot, needle plate and bobbin holder.
5 Lower the needle ⑨ to its lowest position ① by turning the handwheel toward you.
6 In this condition, if the convex of the feed lifting cam ⑥ is in the lowest position, loosen screws ⑥ of the lower shaft gear (G) ③ .
If not, loosen screws ⑤ (2 pieces) of the lower shaft timing gear ④ .
7 Raise the needle bar further 3.4 mm ⑦ from the lowest position ① .
8 Turn the lower shaft gear ③ until the tip of rotary hook meets with the right side of the needle ⑧ .
Tighten the screws of the lower shaft gear or the lower shaft timing gear ⑤ , ⑥ .
9 Reattach the bobbin holder, needle plate and presser foot.
10 Reattach the base lid, base lid (1) base cover, bed cover and belt cover.

① Lowest needle position
② Convex of feed lifting cam
③ Lower shaft gear (G)
④ Lower shaft timing gear
⑤ Screws (2 pieces)
⑥ Screw (F)
⑦ 3.25 to 3.55 mm
⑧ The tip of rotary hook meets with the right side of the needle.
⑨ Needle #14

Adjusting Needle Bar Height

The standard distance between the upper edge of the needle eye and the tip of the rotary hook should be in the range of 1.6 - 2.0 mm when the rotary hook meets the right side of the needle in ascending travel of needle from its lowest position.

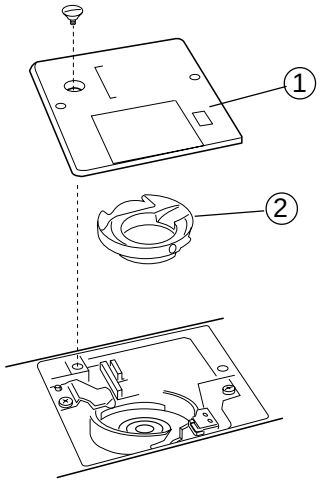

1 Remove the presser foot, Needle plate ① and Bobbin holder ② .

2 Turn the power switch “ON” and select the pattern No.2.

3 Press “ADJUST” key and set the zigzag width at “0”, then turn the power switch “OFF”.

4 Turn the handwheel to raise the needle bar from the lowest position until the tip of the rotary hook meets with the right side of the needle ⑪ .

5 Remove the face cover and loosen Screw ③ as shown.

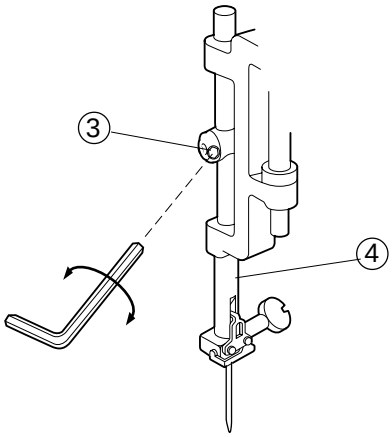

6 Move the Needle bar ④ up or down to adjust the needle bar height.

7 Tighten the Screw ③. Be sure that the groove ⑤ on the needle bar facing right in the front.

8 Attach the face cover.

9 Reattach the Bobbin holder ② , Needle plate (A) ①, presser foot.

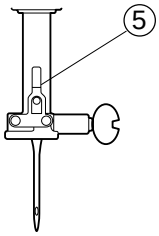

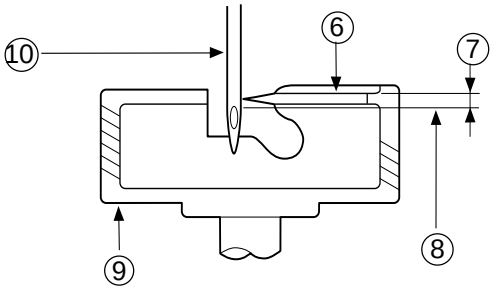

① Needle plate (A)
② Bobbin holder (B)
③ Screw
④ Needle bar
⑤ Groove
⑥ Surface of hook race
⑦ 1.6 to 2.0 mm
⑧ Top of needle eye
⑨ Rotary hook race
⑩ Needle #14

Adjusting Clearance between Needle and Hook

The clearance between needle and rotary hook should be -0.10 to + 0.05 mm.

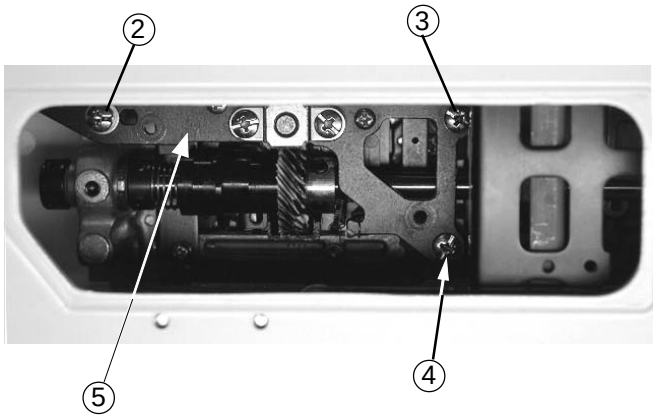

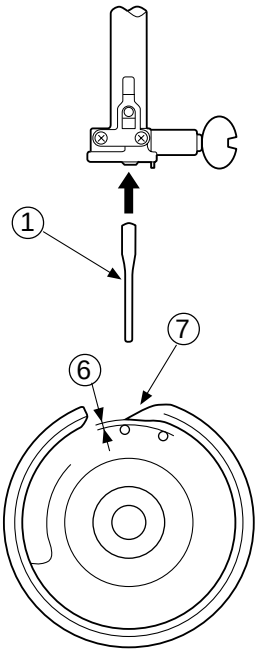

1 Remove the needle plate, bobbin holder, base cover and bed cover (See page 3 - 4), and attach the Test pin ① .

2 Turn the power switch “ON” and select the pattern No. 6, then set the zigzag width at “ 7.0 ” by pressing “ADJUST” key.

3 Loosen Screws (A) ② , (B) ③ , (C) ④ and tighten Screw (C) ④ temporarily.

4 Turn the handwheel toward you and adjust the clearance between the Test pin ① and the Tip of rotary hook ⑦ to - 0.10 to + 0.05 mm ⑥ by moving the Rotary hook set plate ⑤ up or down.

5 Tighten the screws (A) ② ,(B) ③ , (C) ④ firmly.

6 Check the rotary hook driver gear and the lower shaft gear backlash.
If gears mesh or engage tightly or loosely, check “Adjusting Backlash between Hook Drive and Lower Shaft Gear”. (See page 13)

7 Reattach the bed cover, base cover, base lid, needle plate, bobbin holder and needle.

① Test pin
② Screw (A)
③ Screw (B)
④ Screw (C)
⑤ Rotary hook set plate
⑥ - 0.10 to +0.05 mm
⑦ Tip of rotary hook

Adjusting Backlash between Hook Drive Gear and Lower Shaft Gear

The rotary play of the hook should be 0.8 mm or less when the tip of the rotary hook is within the width of the feed dog as shown below.
Adjust the backlash after the adjustment of the clearance between needle and rotary hook.

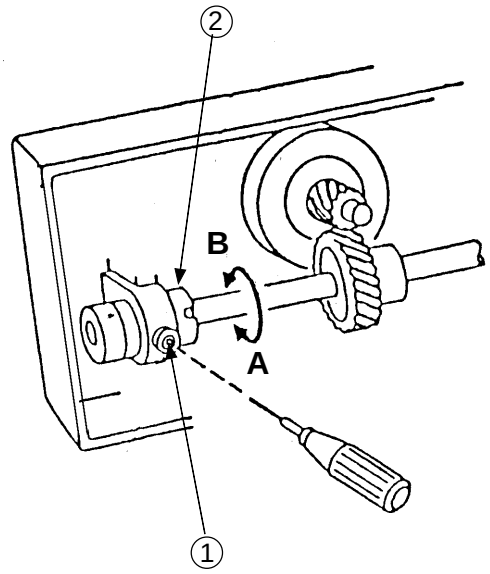

To check:

1 Turn the power switch “OFF”
2 Remove the base cover and bed cover. (See page 3 - 4)
3 Loosen the Hexagonal socket screw ① .
Jog the hook race with fingers to check the rotary play.
“If the play is larger than 0.8 mm or the gears do not turn smoothly, adjust the backlash as follows”

Adjustment procedure:

1 Turn the Lower shaft bushing ② (Eccentric), in th direction of “**A**” when the play at rotary hook tip is too large.
2 Turn the Lower shaft bushing ② (Eccentric), in the direction of “**B”** when the play at rotary hook tip is too small.

3 Tighten the Hexagonal socket screw ① .

4 Reattach the bed cover and base cover.

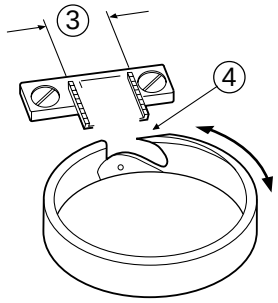

① Hexagonal socket screw
② Lower shaft bushing
③ The rotary hook play should be 0.8 mm or less.
④ Tip of rotary hook

Adjusting Feed Dog Height

When the pressure adjusting dial is set at “3” and the presser foot is lowered, the highest position of the feed dog should be 0.80 to 0.90 mm from the surface of the needle plate.

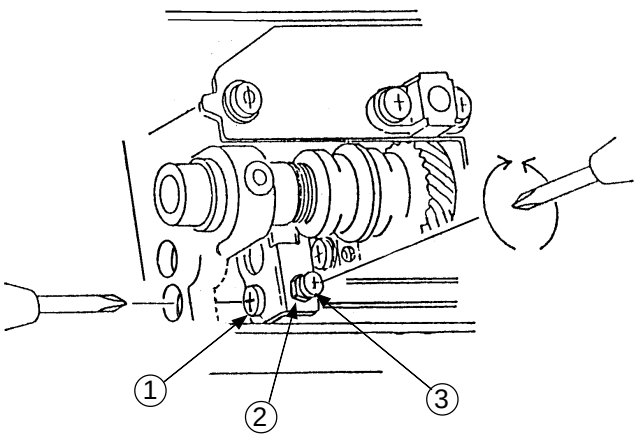

To adjust feed dog height

1 Remove the base cover, base lid (1) and bed cover.
2 Set the pressure dial at “3” and lower the presser bar lifter, then turn the power switch “ON”.
3 Turn the handwheel toward you until the feed dog comes to its highest position.
4 Loosen Screw (A) ① .
5 Loosen Nut ② and adjust the feed dog height to 0.8 to 0.90 mm ⑥ by turning the adjusting screw (B) ③ .
6 Tighten Nut ② .
7 Tighten Screw (A) ① .

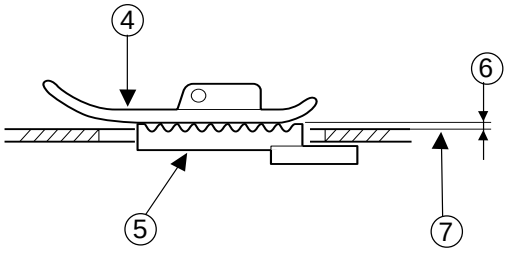

To adjust the feed dog position parallel to needle plate

Turn the handwheel toward you until the feed dog comes to its highest position, the feed dog ⑤ and the needle plate should be parallel. If not, follow the instructions below.

8 Prepare the hexagonal socket screw ⑧ and insert it to the Threaded hole (C) ⑨ and screw it until the tip of threaded screw reaches the bottom.
9 Loosen Screw (D) ⑩ .
10 Turn the hexagonal socket screw ⑧ and adjust the feed dog ⑤ parallel to the needle plate.
11 Tighten Screw (D) ⑩ .
12 Loosen the hexagonal socket screw ⑧ and remove it.

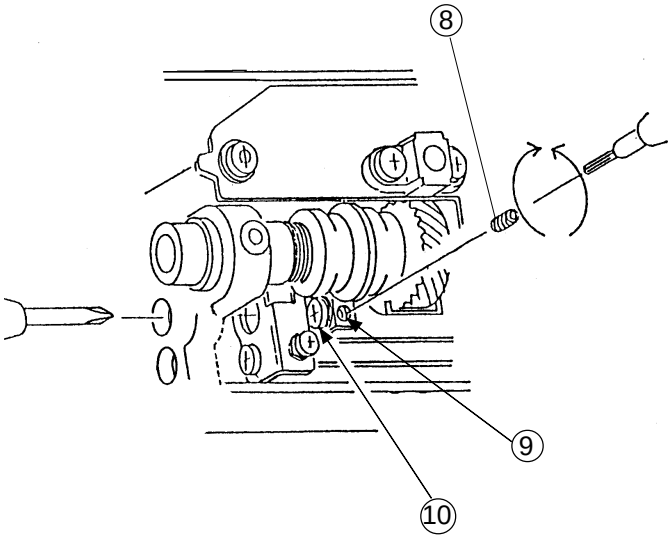

13 Reattach the bed cover, base cover and base lid (1)

① Screw (A)
② Nut
③ Screw (B)
④ Presser foot
⑤ Feed dog
⑥ 0.80 to 0.90 mm
⑦ Needle plate serface
⑧ Hexagonal socket screw (4 x 6)
⑨ Threaded hole (C)
⑩ Screw (D) (Left hand screw)

Adjusting Upper Shaft Shield Plate Position

When the machine is set for zigzag stitch, the needle should start to swing 8.3 to 8.7 mm above the surface of the needle plate.

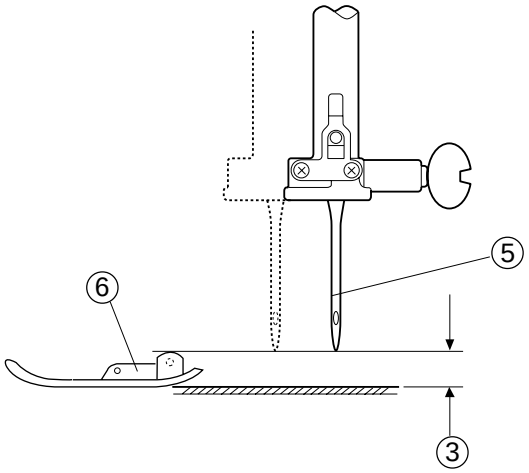

1 Remove the top cover (See page 1) and turn the power switch "ON", then select the pattern No.6 (Zigzag).

2 Turn the handwheel toward you slowly, with your hand, until the needle starts to swing.

(A) If the needle stops higher than 8.7 mm, loosen Screw ① and turn the Upper shaft shield plate ② in the direction of (A).

(B) If the needle stops lower than 8.3 mm, loosen Screw ① and turn the Upper shaft shield plate ② in the direction of (B).

3 Position the right face of the Upper shaft shield plate ② in the center of slit of the Upper shaft sensor ④ and tighten Screw ①.

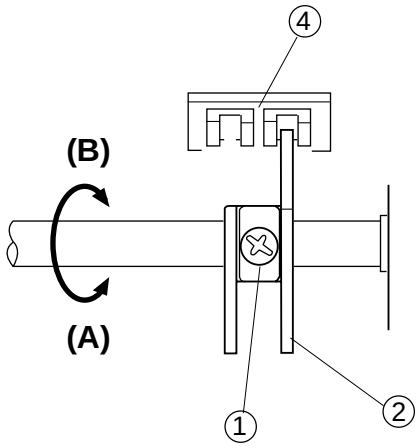

① Screw
② Upper shaft shield plate
③ 8.3 to 8.7 mm
④ Upper shaft sensor
⑤ Needle #14

Adjusting Needle Thread Tension

The standard upper thread tension should be 75 to 90 grams when the tension dial is set at "AUTO", measured with a #50 polyester thread being pulled at approximately 110 mm/sec. in the direction of arrow.

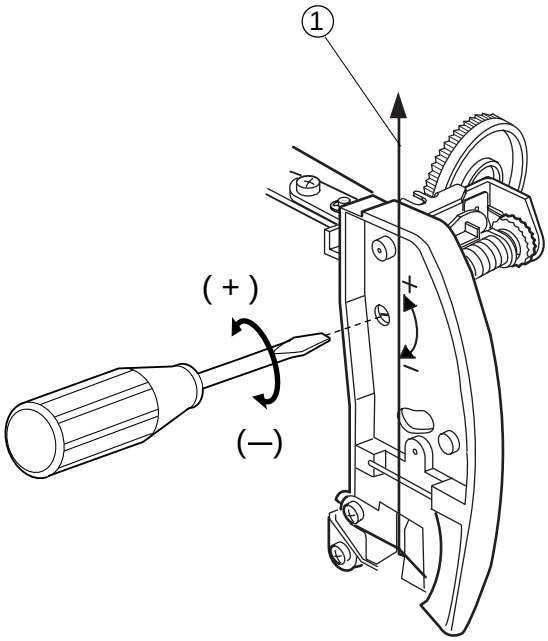

1 Set the Thread tension dial at "AUTO".

2 Lower the presser foot.

3 Remove the face cover and adjust the thread tension.

(A) If the thread tension is less than 75 g,
.....turn the screw in the direction of " + ".
(B) If the thread tension is more than 90 g,
.....turn the screw in the direction of " - "

① Pulling direction: (pulling speed 110 mm/sec.)

Adjusting Tension Release Mechanism

When the presser foot lifter is raised, the tension release mechanism should work correctly. If not, adjust as follows.

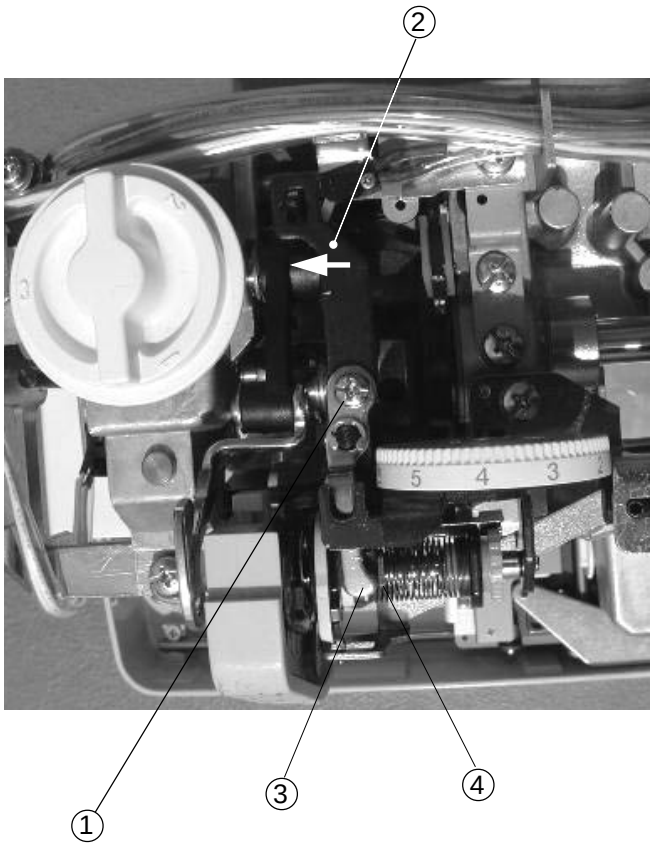

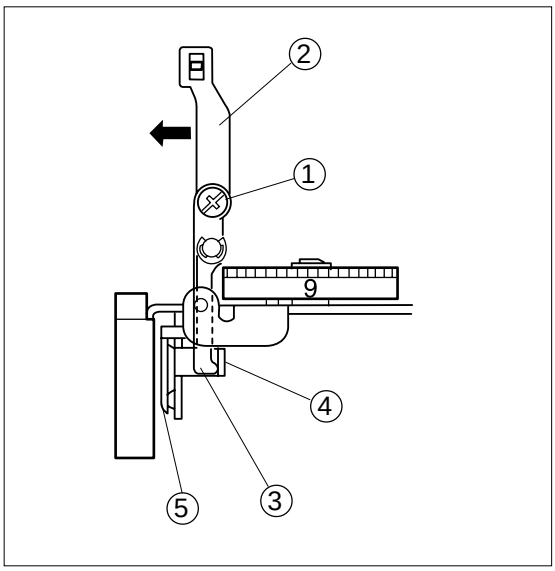

1 Remove the top cover unit. (see page 1)

2 Lower the presser foot lifter, set the thread tension dial at “9” and loosen the Screw (A) ①.

3 Press the tension release plate (1) ③ lightly against the Disc holder ④ while pushing the tension release plate (2) ② in the direction of arrow, then tighten Screw (A) ① .

4 Set the thread tension dial at “9”. Raise the presser foot lifter to check the tension release mechanism.

5. Set the thread tension dial at “0”.
Lower the presser foot lifter.
Make sure the tension disc should not move when the tension release plate (2) ② is moved within its play.

6 Reattach the top cover.

① Screw (A)
② Tension release plate (2)
③ Tension release plate (1)
④ Disc holder
⑤ Tension disc

Changing Thread Tension Unit

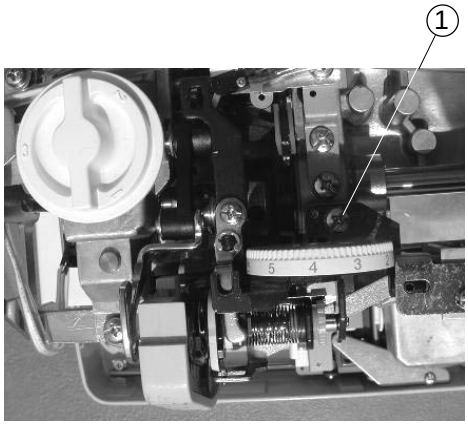

To remove:

1 Remove the front cover. (See page 6)

2 Remove Screws (A) ① , (B) ② and thread tension unit.

To attach:

3 Follow the above procedure in reverse.

Note: After changing the thread tension, check the tension release mechanism and solenoid.

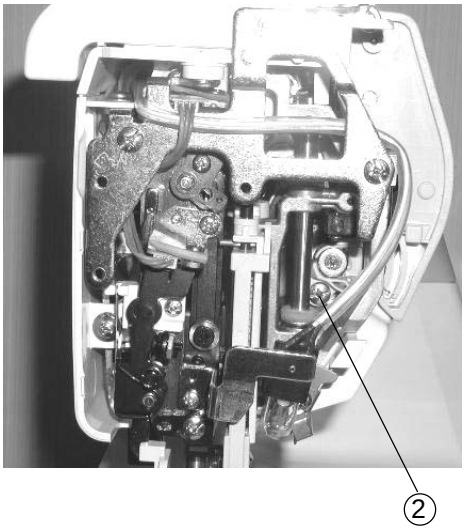

① Screw (A)
② Screw (B)

Adjusting Stretch Stitch Balance

When a stretch pattern is sewn with the feed balancing dial ① set at the standard setting mark "▷", the pattern should be as indicated with the " ◯" mark in the following figure. If not (If the forward feeding and backward feeding are out of balance), make an adjustment as follows:

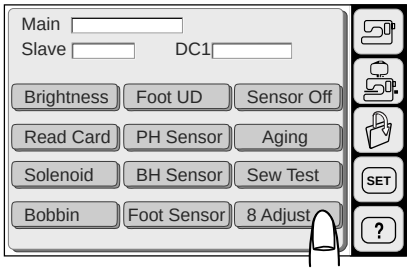

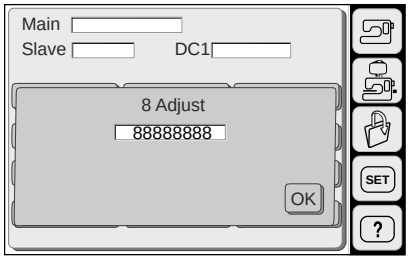

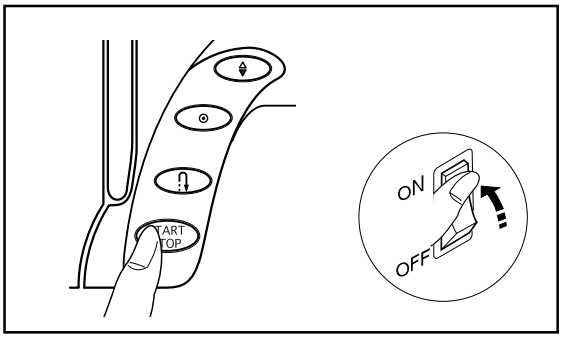

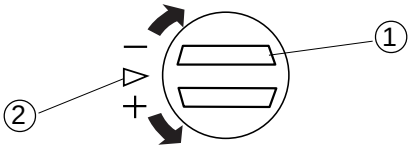

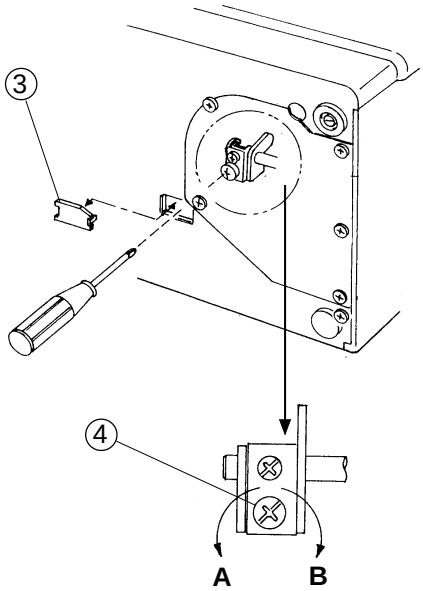

1 Set up the machine in "Adjust Mode". Turn the power switch "ON" while pressing the Start/Stop button (Keep pressing button until the LCD shows the Adjusting window.)
2 Press "8 Adjust" on the touch panel.
3 Set the feed balancing dial ① at the standard setting mark " ▷" ② .
4 Check the sewing results.
(The standard length of the five pieces of figure 8 is 33 - 39 mm ⑤.)
5 Remove the base lid (3) .
6 If the length of the stitch pattern is extended more than the standard length, turn the Adjusting screw ④ in the direction of A.
If the length of the stitch pattern is shorter than the standard length, turn the Adjusting screw ④ in the direction of B.
7 Check the sewing results.
8 Press OK key and turn the power "OFF".
9 Reattach the base lid (3)③ .

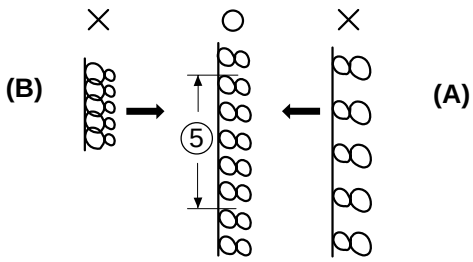

① Feed adjusting dial
② Setting mark
③ Base lid (3)
④ Adjusting screw
⑤ 33 to 39 mm

Replacing Threader Plate and Adjustment

If the hook on the threader plate is damaged, replace it as follows.

Fig. 1

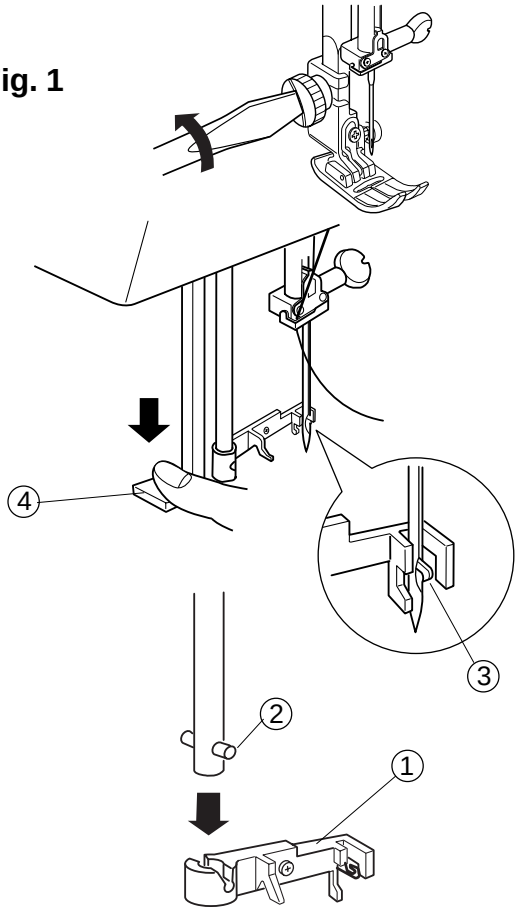

To replace:

1 Remove the foot holder.

2 Pry out the Threader plate holder ① with screwdriver while pushing and holding the Threader knob ① (See Fig.1).

3 Align the groove on the new Threader plate holder ① with the Pin ② on the threader shaft. Push the Threader plate holder ① up until it snaps in place.

① Threader plate holder
② Pin
③ Hook
④ Threader knob

Fig. 2

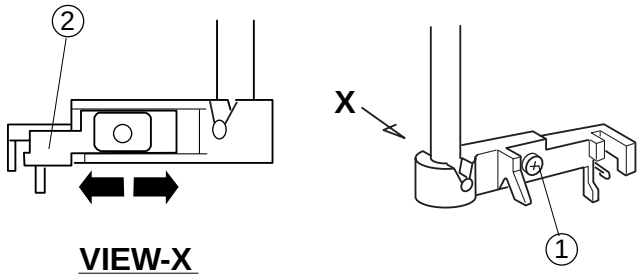

Adjustment procedure:

1. If the threader hook thrusts or hits against either left or right edge of the needle eye: Loosen Screw (A) ① and adjust the position of the threader plate (2). (See Fig. 2).
2. If the threader hook thrusts against either top or bottom edge of the needle eye, or misses the needle eye:
   Remove the face cover and loosen Screw (B) ③ . Move the Threader position adjusting holder (G) ④ up or down to adjust the hook position.

Fig. 3

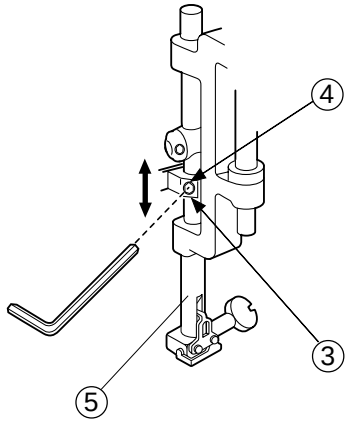

① Screw (A)
② Threader plate
③ Screw (B)
④ Threader position adjusting holder
⑤ Needle bar

Adjusting Height of Embroidery Foot P

Space between the needle plate and the bottom surface of the Foot (P) should be 1.0 to 1.6 mm, when the needle bar is at its lowest position.

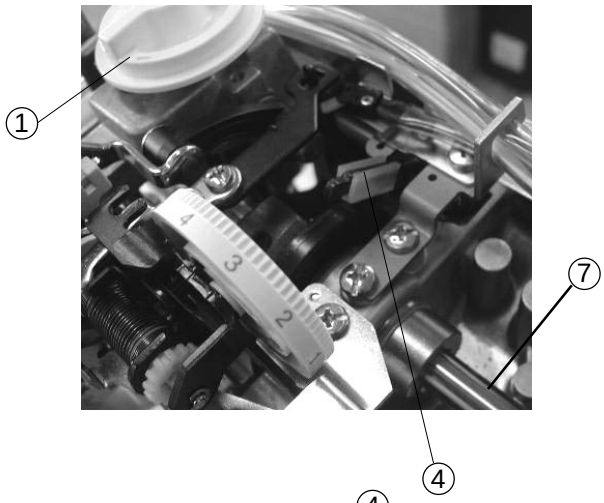

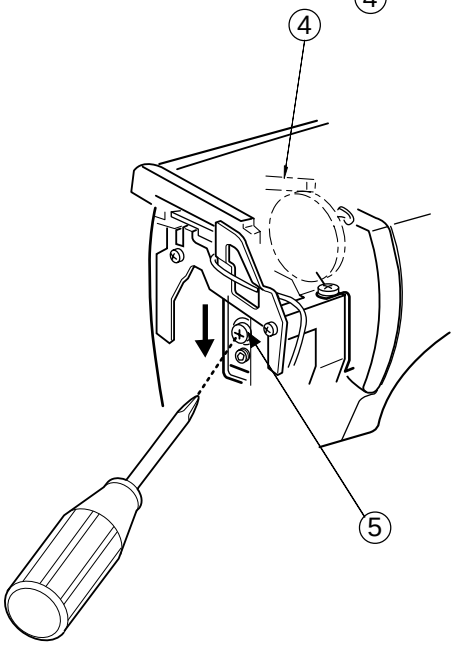

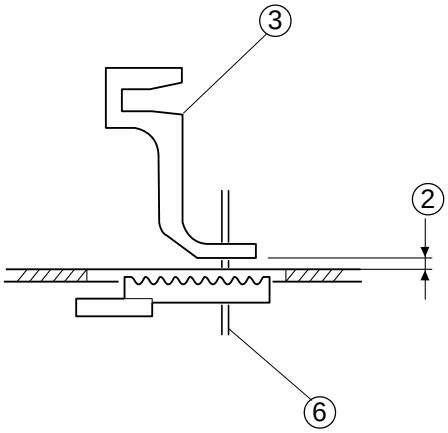

1 Set the pressure dial ① at “2” and remove the top cover.

2 Lower the needle bar and lower the presser bar lifter.

3 Insert the 1.2 mm Thickness gauge ② between the Embroidery Foot (P) ③ and the needle plate.

4 While pressing the Pressure bar actuator ④ down against the upper shaft cam, loosen the Screw (A) ⑤ and push it down to the direction of arrow, then tighten Screw (A) ⑤ again.

5 Reattach the rear cover.
(Set the Pressure dial ① at “3”.)

① Pressure dial
② Thickness gauge
③ Embroidery foot (P)
④ Pressure bar actuator
⑤ Screw (A)
⑥ Needle
⑦ Upper shaft

Connector Connection Diagaram

Please see the following connector connection diagram for the printed circuit board A.

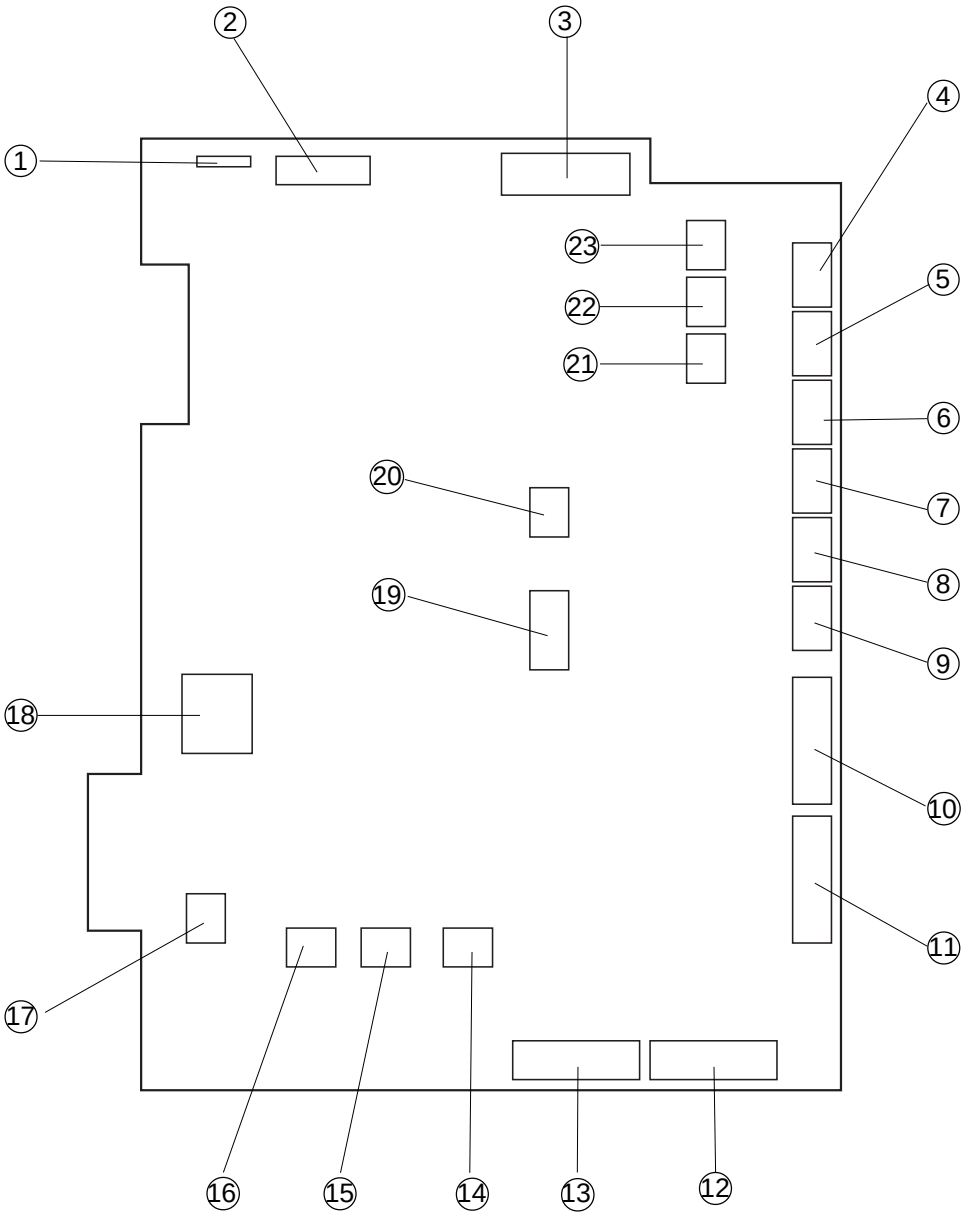

① TTP
② LCD
③ Printed circuit board F (Black)
④ Buttonhole sensor (Black)
⑤ Needle thread detection sensor (Red)
⑥ Embroidery foot P sensor (White)
⑦ Presser foot lifter sensor (Red)
⑧ Slide volume (White)
⑨ Remaining bobbin thread sensor (Blue)
⑩ Zigzag width motor (Black)
⑪ Feed motor (Red)
⑫ X-Motor (Blue)
⑬ Y-Motor (White)
⑭ Thread tension solenoid (Red)
⑮ Remaining bobbin thread solenoid (Blue)
⑯ Lamp (White)
⑰ Inverter (White)
⑱ DC Motor (White)
⑲ Switching regulator (White)
⑳ Foot controller (White)
㉑ Upper shaft sensor (White)
㉒ U/D Feed dog (Black)
㉓ Bobbin winder sensor (Blue)

Replacing Printed Circuit Board A

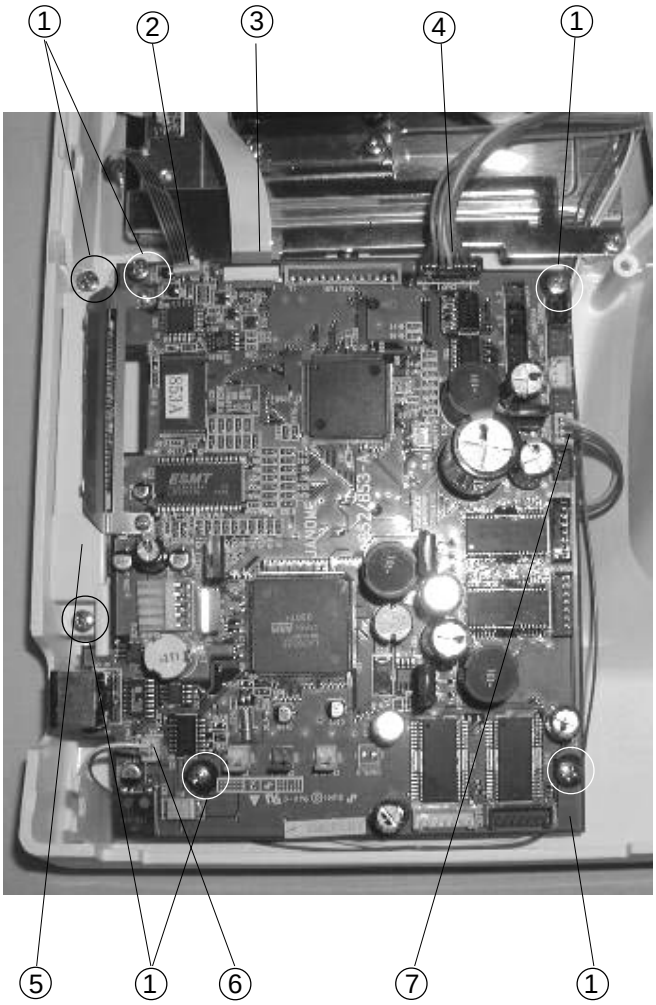

To remove:

1 Remove the front cover. (See page 6)

2 Pull out the printed circuit board F ④, TTP ②, LCD ③, Inverter ⑥ and Slide volume ⑦ connectors.

3. Remove Screws ① (6 pieces) and remove the printed circuit board A with the Card guide ⑤.

To remove:

4 Follow the above procedure in reverse.

① Screws (6 pieces)
② TTP connector
③ LCD connector
④ Printed circuit board F connector
⑤ Card guide
⑥ Inverter connector
⑦ Slide volume connector

Replacing Touch Panel (LCD)

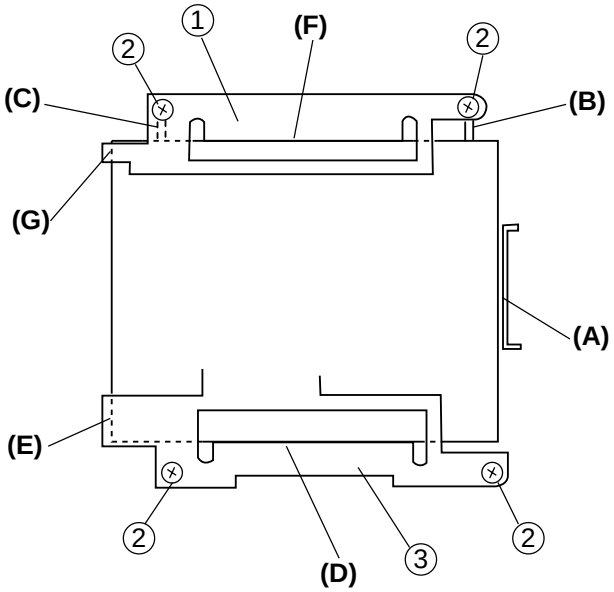

To remove:

1 Remove the front cover. (See page 6)

2 Pull out the Printed circuit board F ④ , LCD Harness ⑤ and Inverter ⑥ and Touch panel ⑦ connectors.

3 Remove Screws ② (4 pieces) and remove the touch panel ⑧.

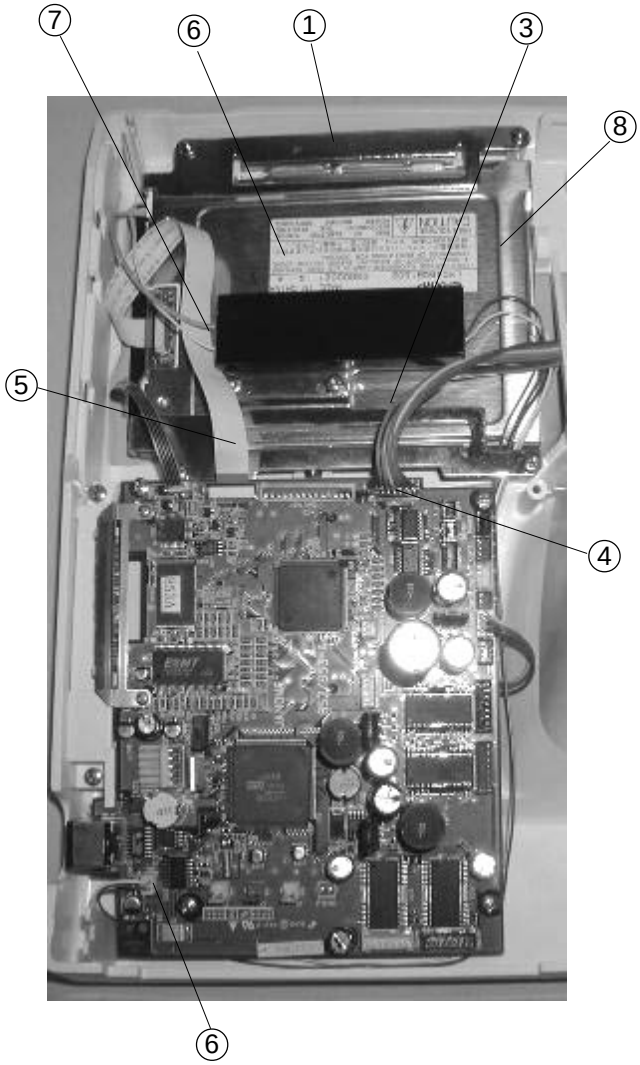

To attach:

5 Place the Touch panel ⑧ and press it against the ribs (A), (B), (C), press the (D) and (E) of the LCD fixing plate bottom) ③ to the Touch panel ⑧ and tighten screws ②.

6 Place the (F) and (G) of LCD Fixing plate (Top) ① to the LCD, then tighten the screws.

7 Connect the connectors into the machine and attach the front cover.

① Fixing plate (Top)
② Screw
③ Fixing plate (Bottom)
④ Printed circuit board F connector
⑤ LCD Harness
⑥ Inverter connector
⑦ Touch panel connector
⑧ Touch panel (Rear side)

Replacing Printed Circuit Board F/Slide Volume

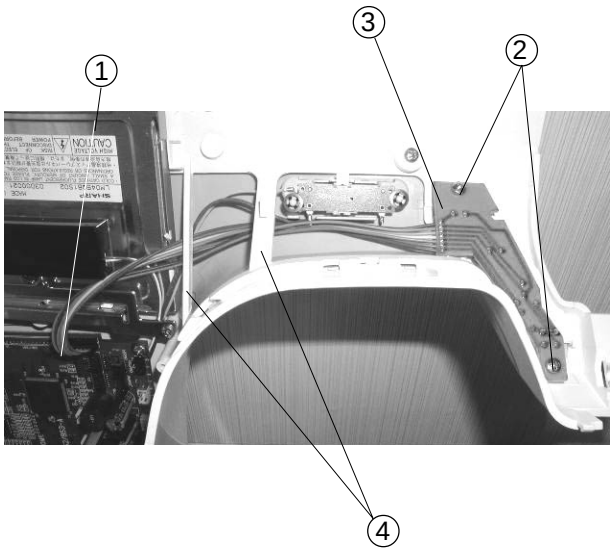

Printed circuit board F

To remove:

1 Remove the front cover. (See page 6)
2 Pull out the Connector ① from the printed circuit board A.
3 Remove Screws ② (2 pieces) and remove the Printed circuit board F ③ .

To attach:

4 Follow the above procedure in reverse.
(Pass the cords under the ribs ④ as shown.)

① Printed circuit bord connector
② Screws (2 pieces)
③ Printed circuit board F
④ Ribs

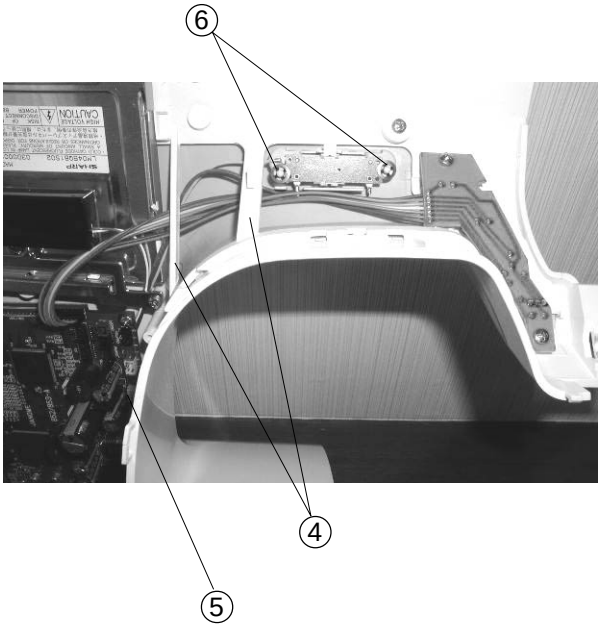

Slide volume

To remove:

1 Remove the front cover. (See page 6)

2 Pull out the Slide volume connector ⑤ from the printed circuit board A.

3 Remove the CS ring ⑥ (2 pieces) and remove the slide volume.

⑤ Slide volume connector
⑥ CS ring

To attach:

4 Follow the above procedure in reverse.
(Pass the cords under the ribs ④ as shown.)

TTP Adjusting Mode

if a different pattern appears on the touch panel when you pressed the touch panel for selecting a desired pattern, follow the instructions below.

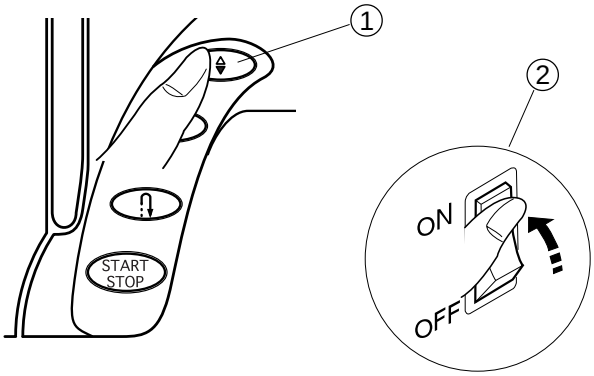

To adjust touch panel:

1 While pressing the Needle Up/Down button ①, turn the power switch "ON"② .
(Keep pressing the Needle Up/Down button until the "PRESS MARK" and " + " mark appears.)

① Needle Up/Down button
② Power switch
③ Touch panel

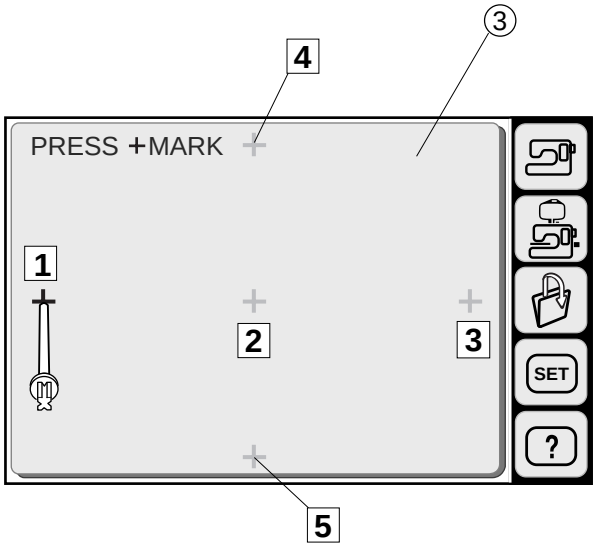

2 Press "+ " mark with the tip of the additional spool pin. (Press 1 to 5 in order.)

3 When you press the fifth " + ", "ADJUSTMENT END" will appear on the touch panel.

4 Turn the power switch ② "OFF".

5 Turn the power switch "ON" and check the Touch panel ③ again.

Adjusting Solenoid

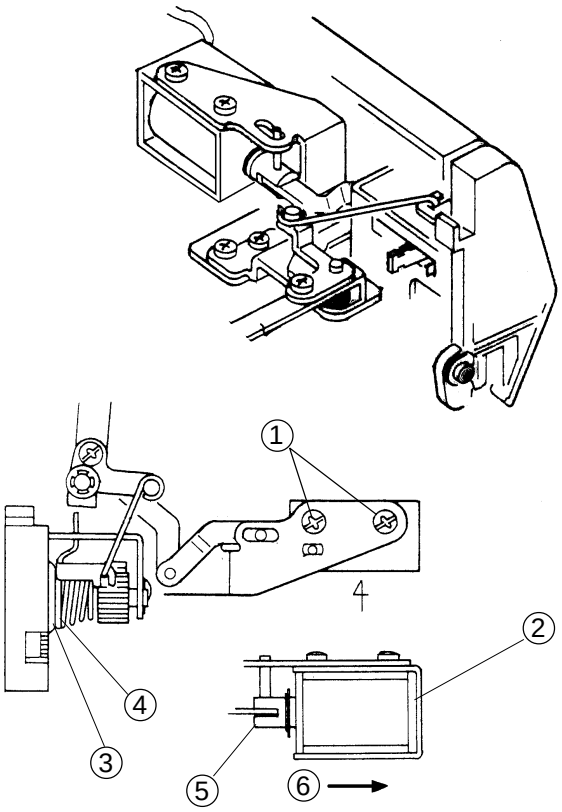

To adjust:

1. Remove the top cover. (See page 1)

2. Loosen Screws ① (2 pieces).

3. Slide the Solenoid ② to the right most position.
4. Tighten Screws ① .

① Screw
② Solenoid
③ Tension disc
④ Tension disc holder
⑤ Plunger
⑥ Slide to the right

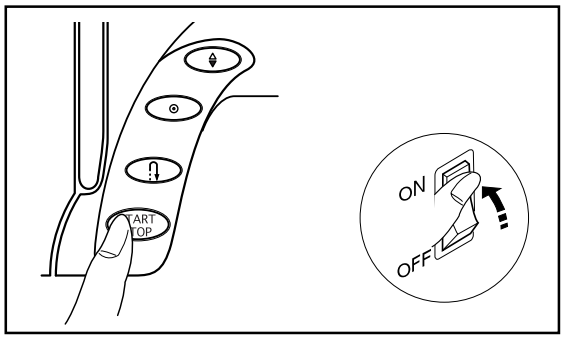

5 To check tension release function

a. Lower the presser bar.
Turn the power switch “ON” while pressing the Start/ Stop button. Touch panel indicates the Self Check function keys as shown.

b. Press “Solenoid “ key on the touch panel and it will indicate Solenoid “Key”.

c. Press the Solenoid “Key” several times to check if the Tension disc ③ and Tension disc holder ④ open when the solenoid is activated.

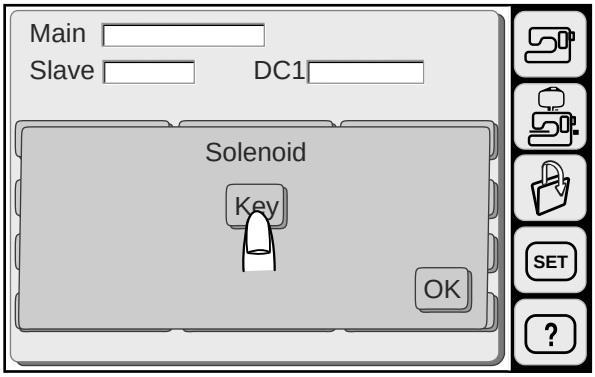

d. Press “ OK “ key.

e. Turn the power “OFF”.

f. Attach the top cover.

Adjusting Buttonhole Lever

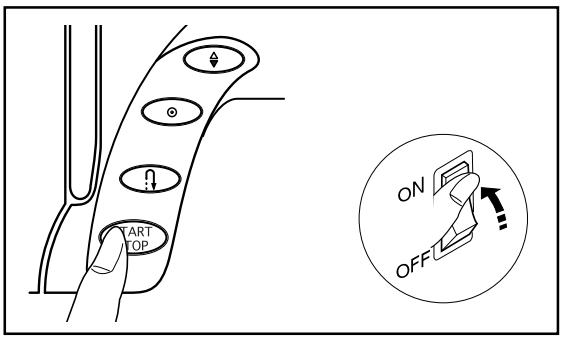

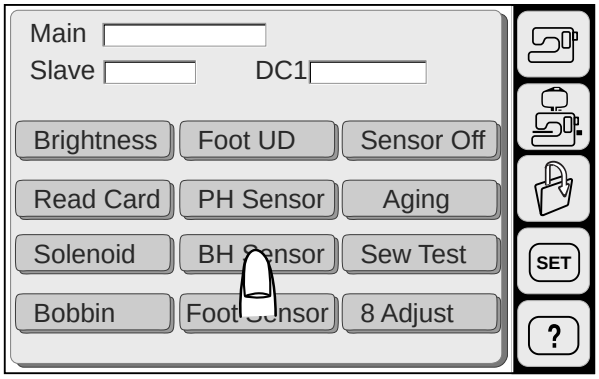

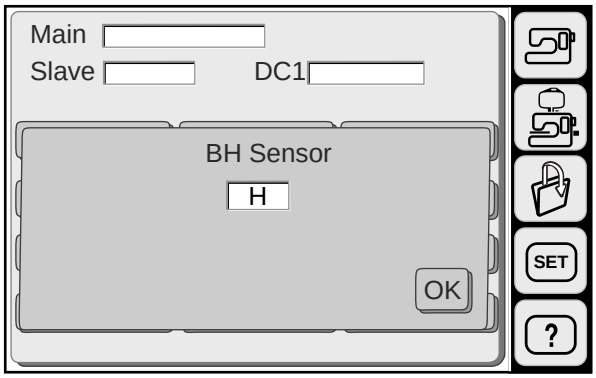

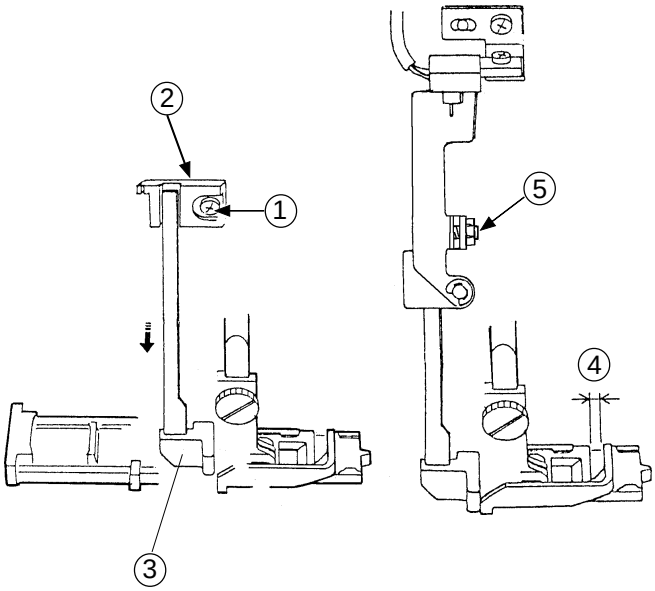

To adjust buttonhole lever:

1 Start up the machine in “Adjust Mode”. Turn the power switch “ON” while pressing the Start/Stop button. (Keep pressing the button until the LCD shows Adjusting window.)

2 Press “BH Sensor” key on the touch panel.

3 Loosen screw (A) ① and move the BH lever guide ②, so that the screen shows “L” when the BH lever ③ is lowered. Then tighten Screw (A) ①.

4 Attach the BH Foot (R) and lower the BH lever ③.

5 Insert the 1.6 mm thickness gauge ④ between the slider and the spring holder to set the space at 1.6 mm.

6. Loosen Screw ⑤ until the touch panel shows “H”.

7 Screw in the screw until the screen indication changes from “H” to “L”.

8 Press “OK” key and turn the power switch “OFF”.

① Screw (A)
② Buttonhole lever guide
③ Buttonhole lever
④ Clearance: 1.6 mm
⑤ Screw

Adjusting Presser Foot Sensor

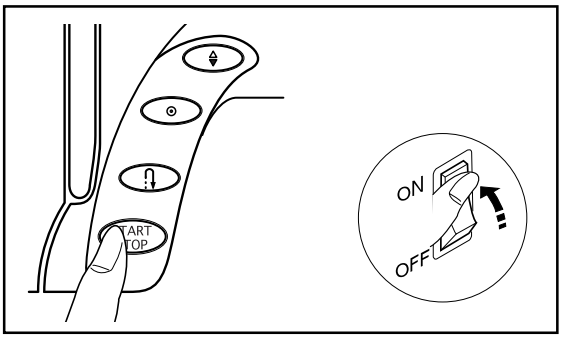

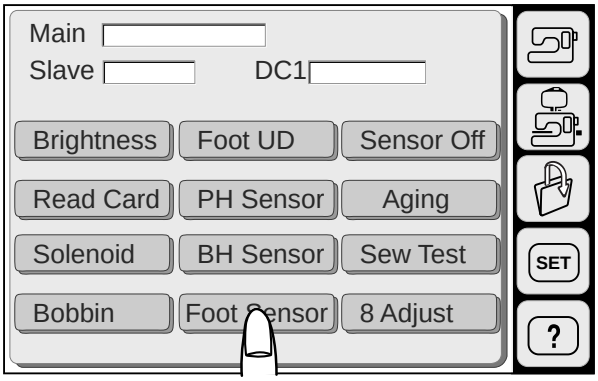

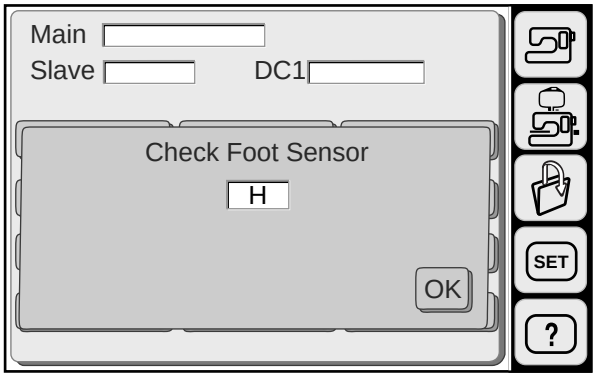

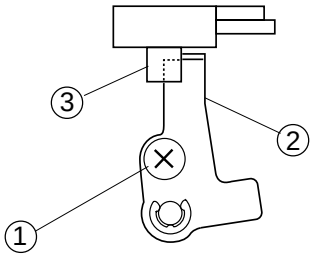

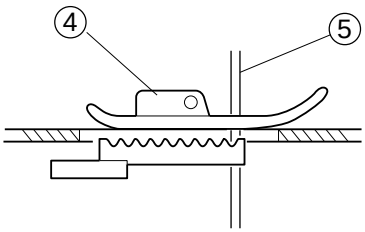

To adjust foot sensor position

1 Start the machine in “Adjust Mode”. Turn the power switch “ON” while pressing the Start/Stop button at the same time. (Keep pressing both buttons until LCD shows Adjust Mode.)
2. Press the “Foot Sensor” key on the touch panel.
3 Attach the Standard presser foot ④ , set the pressure dial at “3” , lower the feed dog and the presser foot ⑤ .
4. Lower the needle bar to the lowest position ⑤ .
5 Loosen the Foot sensor shield plate screw ① .
6 Move the foot sensor shield plate ② to the left most until it touches the sensor ③ lightly.
(“L” will appear on the touch panel.)
7. Remove the standard foot ④ and lower the presser bar.
(H will appear on the touch panel.)

To check:

8 Set the pressure dial at “2”.

9 Change the foot to Embroidery foot P and slowly lower the presser foot lifter.

10 Turn the handwheel to raise the needle bar to its highest position.

11 When slightly moving the foot sensor shield plate ② within its play, check the indication on the touch panel.

If the screen shows “H”:	The foot sensor is properly adjusted. Press the “OK” key and turn the power switch “OFF”.
If the screen shows “L”:	Readjust the height of Embroidery foot P and proceed with the adjusting steps again from step 1 to 7.

① Screw
② Foot sensor shield plate
③ Sensor
④ Standard foot
⑤ Lowest needle position

Adjusting Presser Foot Lifter Sensor

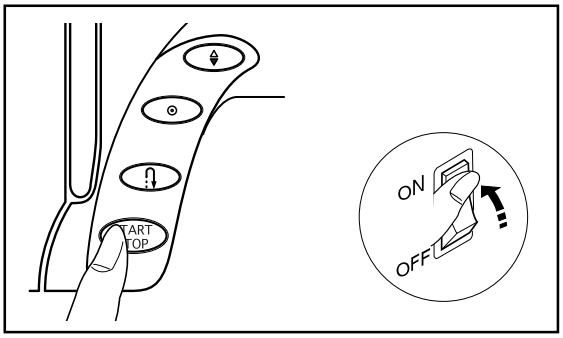

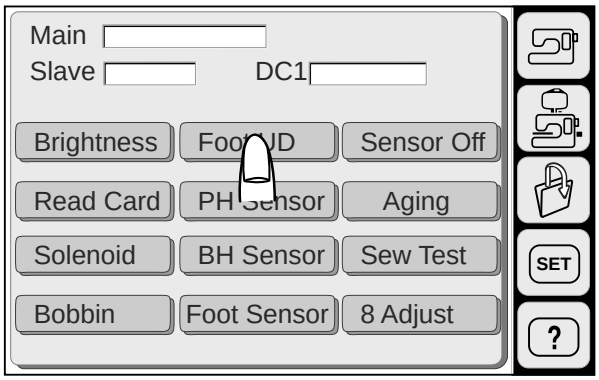

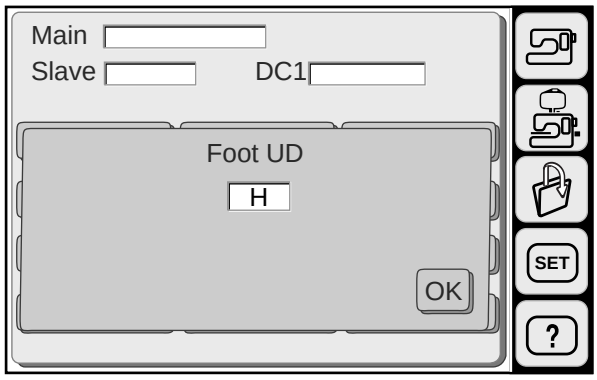

To adjust the presser foot sensor

1 Start the machine in “Adjust Mode”. Turn the power switch “ON” while pressing the Start/Stop button at the same time. (Keep pressing both buttons until LCD shows “Adjust Mode”.)

2. Press the “Foot UD” key on the touch panel.

3 Remove the top cover.

4. Loosen Screw (A)① and adjust the Switch fixing plate ② and make sure the screen shows “H” when the presser foot is raised and screen shows “L” when the presser foot is lowered, then tighten the Screw (A)① .

* After turning the power switch “ON”, in this condition, the Tension release plate ③ should be pushed by the Tension release lever ④ .

5 Press “OK” key and turn the power switch “OFF”.

6 Attach the top cover.

* Turn the power switch “ON” and check if the sensor works properly when the patternNo.16 is selected.

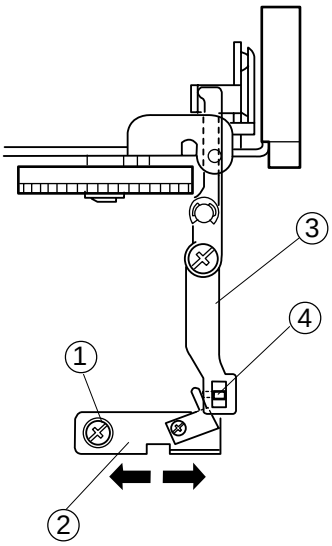

① Screw (A)
② Switch fixing plate
③ Tension release plate
④ Tension release lever

Adjusting Remaining Bobbin Thread Sensor

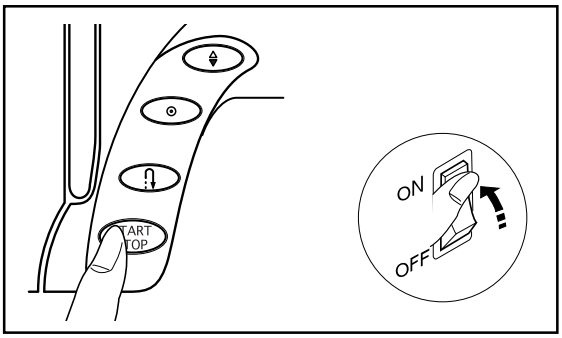

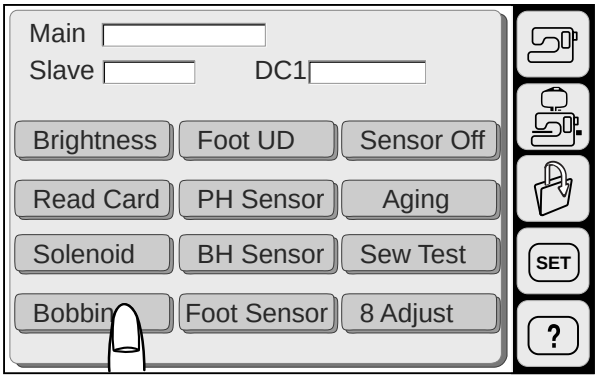

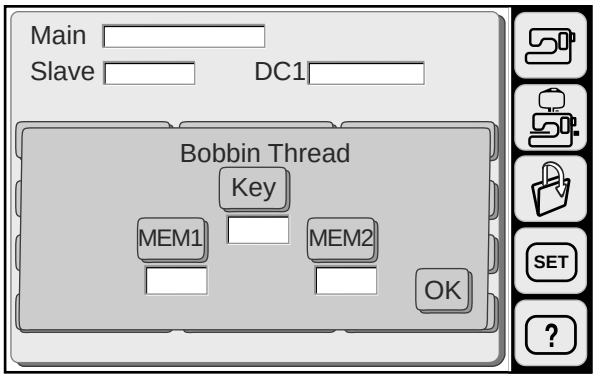

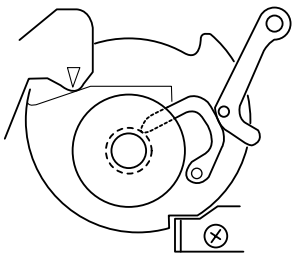

To adjust buttonhole lever:

1 Start up the machine in “Adjust Mode”.
Turn the power switch “ON” while pressing the Start/Stop button.
(Keep pressing the button until the LCD shows Adjusting window.)

2 Press “Bobbin” key on the touch panel.

3 Insert the gauge bobbin (9.2 mm in diameter) in the bobbin holder and press the “Key” button.
(The numbers will appear under the “Key” button. Press the “Key” button several times and check if the same number appears each time.)

Note: Wind a bobbin to 9.2 mm in diameter (use calipers to measure) and use it as a substitute for gauge bobbin.

4 Press “MEM1” button. (The data for step 3 is registered in “MEM 1”.)

5 Insert the gauge bobbin (10.3 mm in diameter) in the bobbin holder and press the “Key” button.
(The numbers will appear under the “Key” button. Press the “Key” button several times and check if the same number appears each time.)

6. Press “MEM 2“ button. (The data for “Step 5” is registered in “MEM 2”.)

7 Make sure the difference of numbers for “MEM 1” and “MEM 2” is 6 or more. (The mean number of “MEM 1” and “MEM 2” will be the standard data.)

8 Press “OK” button.

9 Turn the power switch “OFF”.

Replacing DC Motor and Motor Belt Tension Adjustment

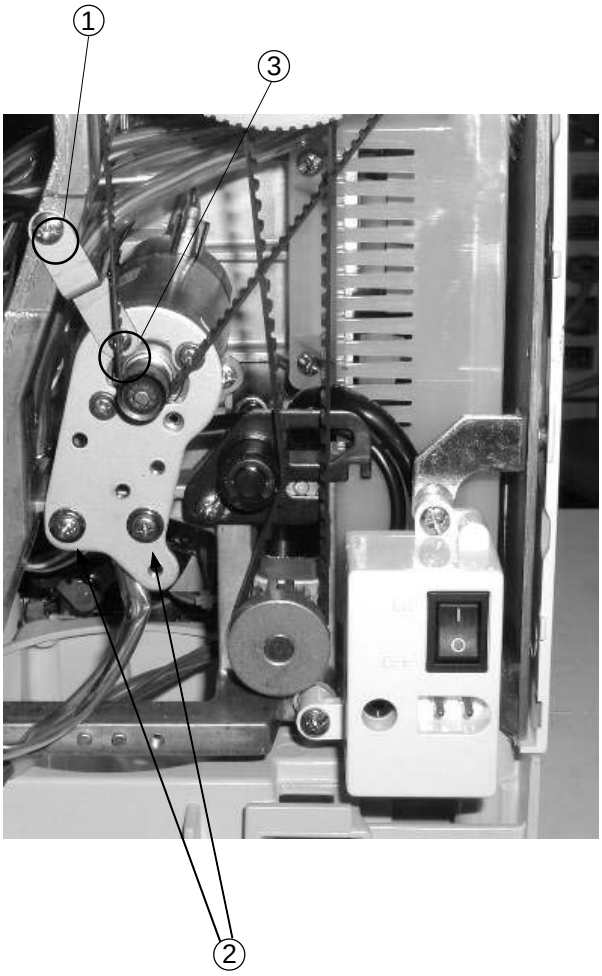

Replacing DC Motor

To remove:

1 Remove the belt cover. (See page 2)

2 Remove the motor belt.

3 Disconnect the Motor connector from the printed circuit board A.

4 Remove Screw (A) 1 .

5 Remove Screws (B) 2 (2 pieces) and replace the motor.

To attach:

6 Follow the above procedure in reverse.

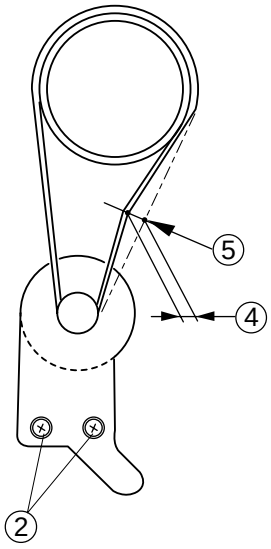

Adjusting motor belt tension

1. Tighten Screws (B) 2 (2 pieces) temporarily.

2. Adjust the Belt deflection to about 5.0 mm 4 by pressing the middle of the motor belt with your finger with approximately 200 grams of pressure 5 .
3. Tighten Screw 2 securely.

1 Screws (A)
2 Screws (B)
3 Screw (C)
4 Deflection
5 Pressure 200 grams

Replacing Carriage Plate (Unit)

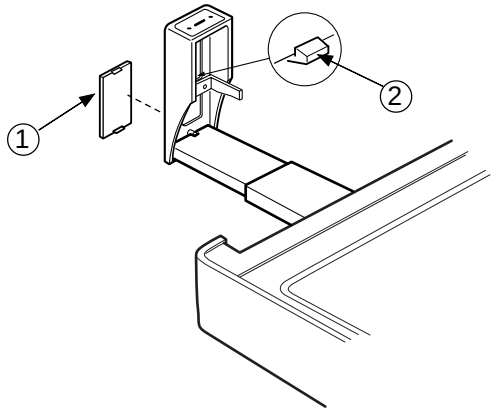

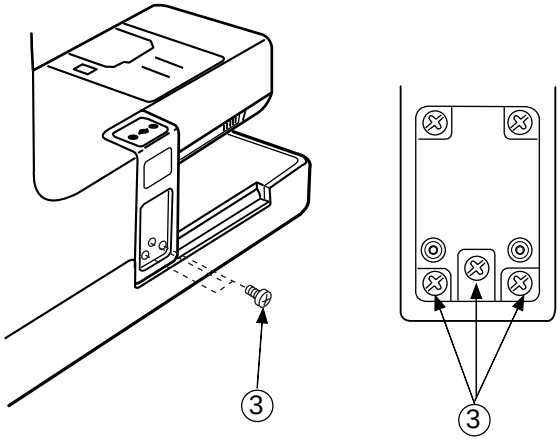

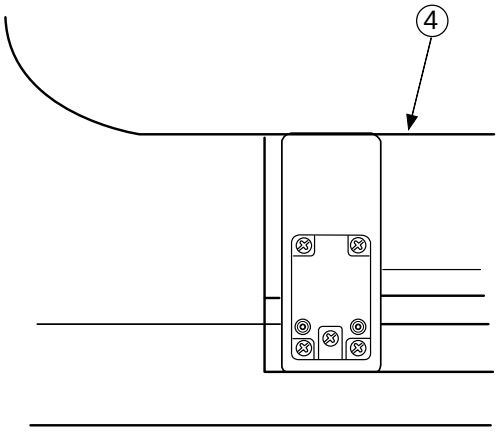

Replace the carriage plate

To remove:

1 Turn the power switch “ON” and select the Embroidery Mode and select the pattern No.1.

2 Turn the power switch “OFF” and remove the Cover cap ① .
(Unlock the Hook ② from the inside.)

3 Turn the power switch “ON” and return the carriage to the home position.

4 Remove Screws ③ (3 pieces) and remove the carriage plate.

To attach:

5 Attach the carriage plate (unit) and tighten Screws ③ temporarily.

6 Adjust the carriage plate position so that its top surface is parallel and the same level with the Bed surface ④ . Tighten the Screws ③ securely.

7 Attach the Cover cap ① .

① Cover cap
② Hook
③ Screws
④ Bed surface

Adjusting Feed Dog Up/Down Position

The carriage moves to drop the feed dog when selecting the Embroidery Mode.
It raises the feed dog when selecting the Utility Stitches.
Note: The feed dog also automatically drops when selecting button sewing, basting stitches and free quilting.

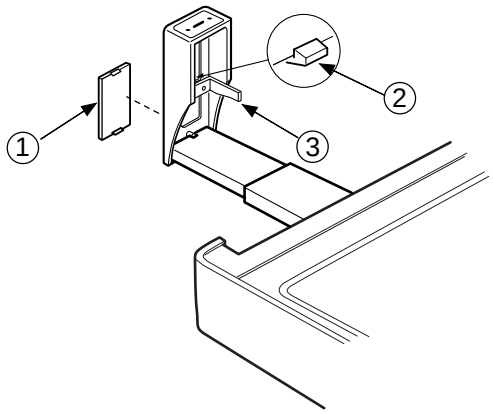

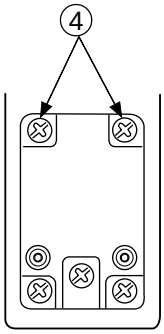

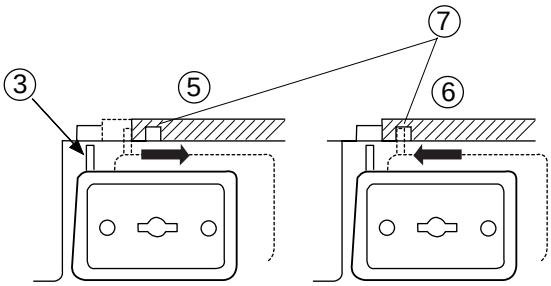

To adjust:

1 Turn the power switch “ON” and select the “Embroidery Mode” and select the pattern No.1.

2 Turn the power switch “OFF” and remove the Carriage cover cap ① . (Unlock the Hook ② from the inside.)

3 Turn the power switch “ON” and return the carriage to the home position.

4 Loosen the Drop plate screws ④ (2 pieces).

5 Adjust the Drop plate ③ moving it to the left or right if the feed dog does not drop when selecting the “Embroidery Mode“ or does not rise (the drop plate ③ does not set in to the recess) when selecting the “Utility Stitches”.

6 Tighten the Drop plate screws ④ .

7 Reattach the Carriage cover cap ①.

8 Check the feed dog drops ⑤ or raises ⑥ properly.

① Carriage cover cap
② Screws
③ Drop plate
④ Hook
⑤ Feed dog down
⑥ Feed dog up
⑦ Recess

Adjusting X and Y Sensors

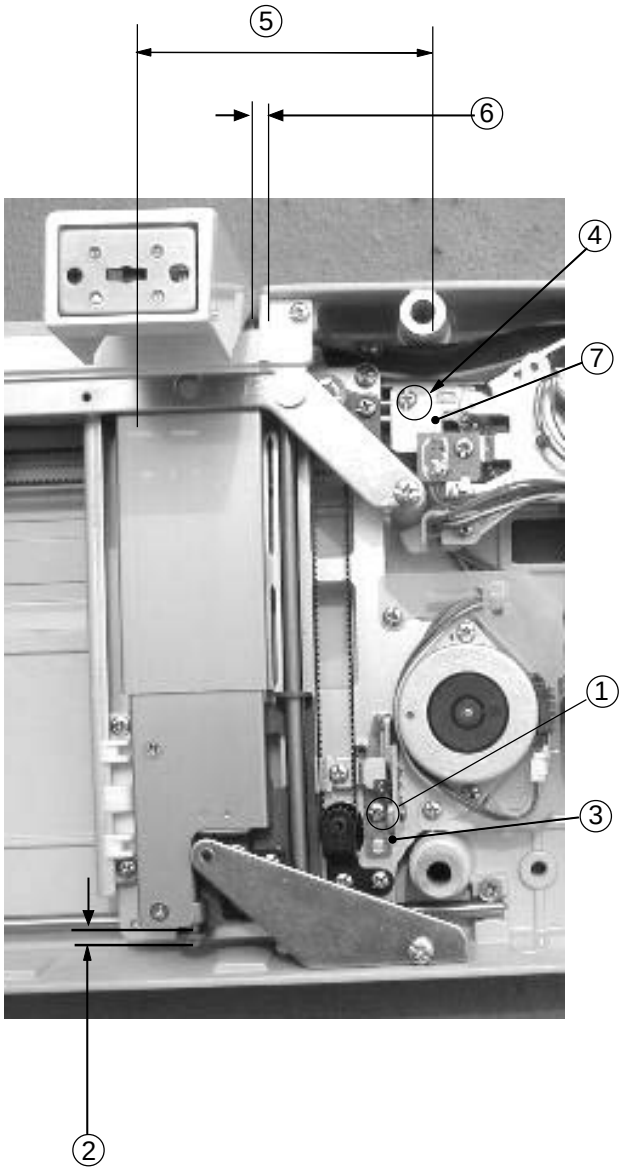

To adjust X and Y sensors:

1 Turn the power switch “ON”.
(The carriage is automatically set at initial position).

2 Turn the power switch “OFF” and then remove the base unit.

3 Loosen Screw A① and move the Y-Sensor fixing plate ③ to adjust the carriage position.
Turn the power switch “ON” again to check if the Distance (Y) ② is 2.5 mm.
Tighten Screw (A)① .

4 Loosen screw (B) ④ and move the X-shield plate ⑦ to adjust the carriage position (X-1) ⑤ and (X-2) ⑥ .
Turn the power switch “ON” again to check if the distance (X-1) ⑤ is 69 mm and (X-2) ⑥ is 2.5 mm.

5 Tighten Screw ④ .

6. Attach the base.

① Screw (A)
② Y (2.5 mm)
③ Y sensor attaching plate
④ Screw (B)
⑤ X-1 (69 mm)
⑥ X-2 (2.5 mm) between the edge of carriage and Arm
⑦ X- Shield plate

Adjusting X and Y Sensors (Simple Adjustment)

To adjust X and Y sensor (without removing the base unit):

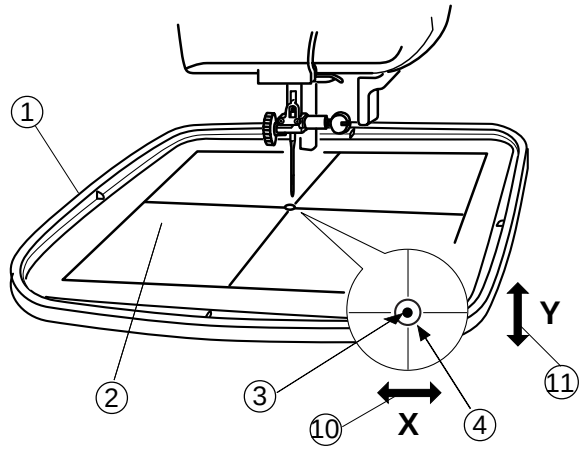

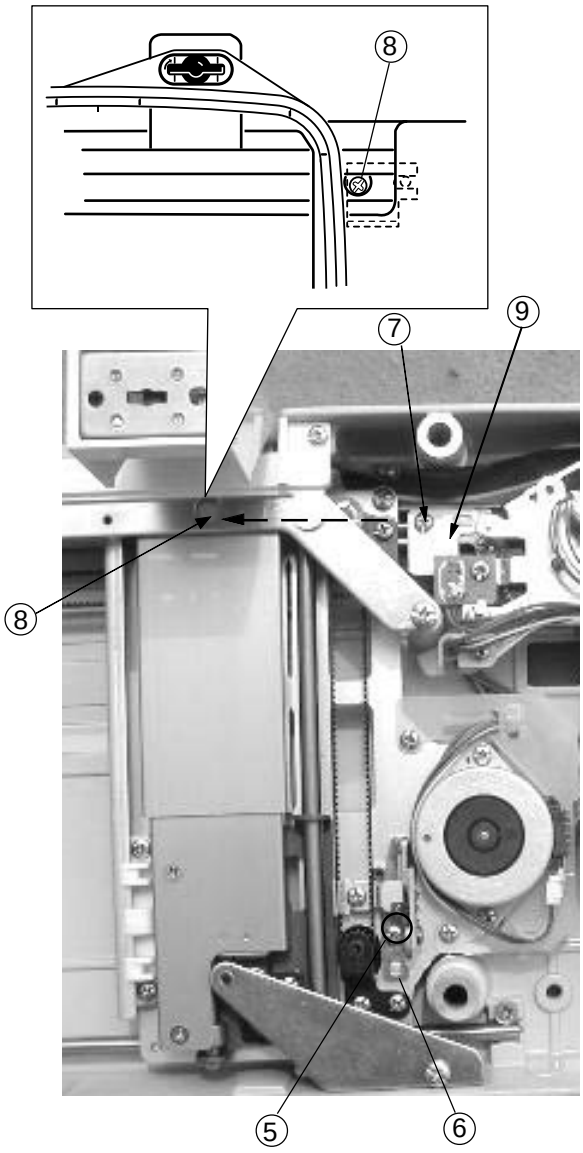

1 Remove the base cover.

2 Remove the presser foot holder and place the fabric on the Embroidery hoop (A) ①.
Attach the Embroidery foop (A) ① on the carriage.
(Place the Template ② on the Embroidery hoop as shown.)

3 Turn the power switch “ON” and select the Embroidery Mode, then select the pattern No.1 on the touch panel.

4 Check if the Needle ③ goes into the Hole ④ in the Template ② .

5 Turn the power switch “OFF”.

6 If the needle drop position is slightly out of position in the Y-direction, loosen the Screw (A) ⑤ and move the Y-sensor fixing plate ⑥ to adjust.
If the needle drop position is slightly out of position in the X direction, loosen the Screw (B) ⑦ through the hole of the Sheet cover fixing plate hole ⑧ , and move the X shield plate ⑨ to adjust.

7 Turn the power switch “ON”
Select the Embroidery Mode and select the pattern No.1 on the touch panel, then check if the needle goes into the center of the Hole in the template ④ .

8 Return the carriage to the stored pposition, then turn the power switch “OFF”.

9. Remove the Template ② and the Embroidery hoop ① , then install the base cover.

① Embroidry hoop
② Template
③ Needle
④ Hole in the template
⑤ Screw (A)
⑥ Y-Sensor fixing plate
⑦ Screw (B)
⑧ Hole of the sheet cover fixing plate
⑨ X- Shield plate
⑩ X- direction
⑪ Y- direction

Adjusting X Motor Gear

If the machine is noisy when sewing an embroidery design, adjust the X-Motor as follows.

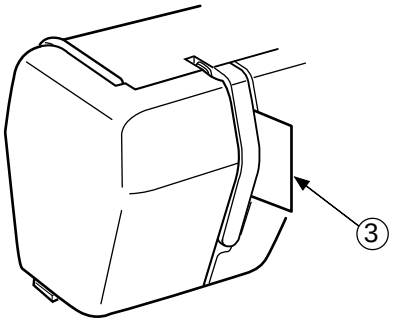

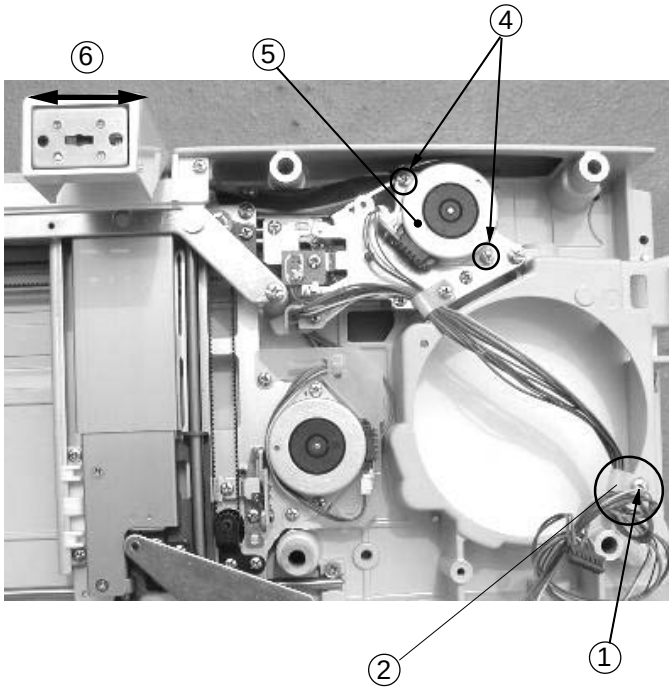

To remove:

1 Remove the base unit (See page 5).
2 Remove the presser foot.
3 Remove Screw (A) ① and Nylon clip ② from the cords.

Adjustment procedure:

4 Connect the X and Y motor connectors to printed circuit board A.
5 Turn the power switch “ON” and select the 3 large “A”s of Gothic of the monogramming.

6 Lower the presser foot after the carriage moves to the sewing position.

7 To unable the needle thread sensor, insert a piece of paper ③ into the channel as shown.
8 Run the machine and loosen Screws (B) ④ (2 pieces). While the carriage is moving in the direction of arrows ⑥ , adjust the X-Motor position where the lowest noise is obtained and tighten Screws (B) ④ firmly.
9 Return the carriage to the stored position and turn the power switch “OFF”.
10 Pull the X and Y motor connectors out from the printed circuit board (A), then tighten screw (A) to place the nylon clip ② .

11 Connect the X, Y motor connectors to the printed circuit board A again.

12 Reattach the base unit.

① Screw (A)
② Nylon clip
③ Insert a piece of paper
④ Screw (B)
⑤ X-Motor
⑥ Carriage moving in lateral direction

Replacing Switching Power Supply

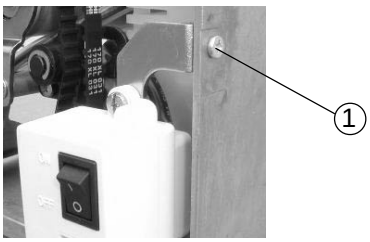

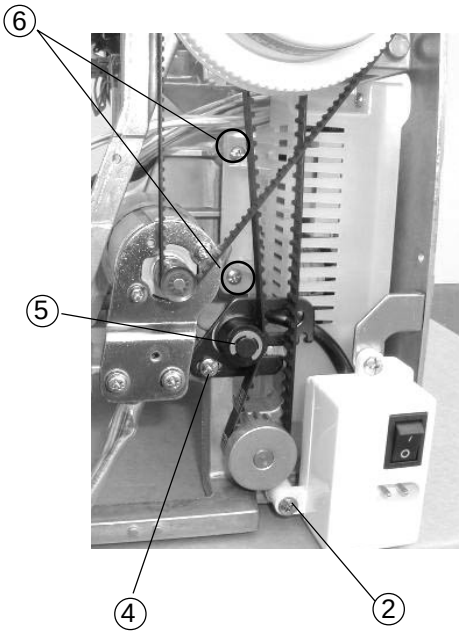

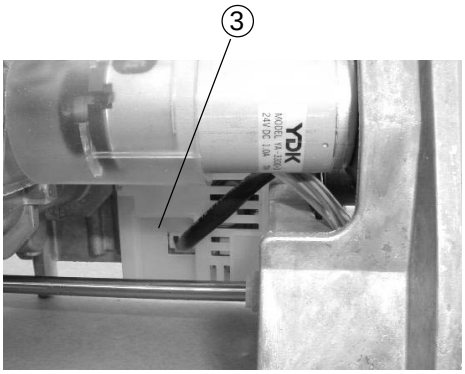

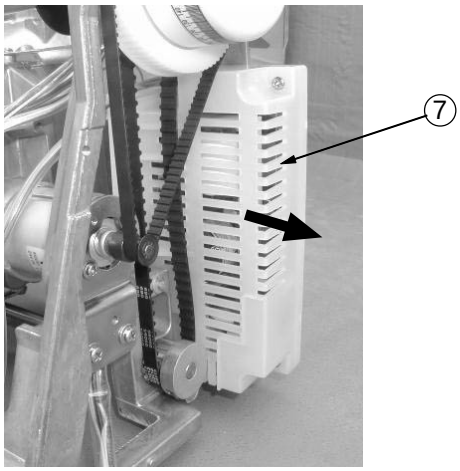

To remove:

1 Remove face cover, belt cover, front cover and rear cover.

2 Remove Screws (A) ①, (B) ② and remove the machine socket and fixing plate.

3 Pull out the Machine socket unit connector ③ .

4 Remove Screw (C) ④ and remove the Idler ⑤ .

5 Remove Screws (D) ⑥ (2 pieces) and Switching power supply ⑦ to the handwheel side.

To attach:

6 Follow the above procedure in reverse.

① Screw (A)
② Screw (B)
③ Machine socket unit connector (primary circuit)
④ Screw (C)
⑤ Idler
⑥ Screw (D)
⑦ Switching power supply