SERVICE MANUAL

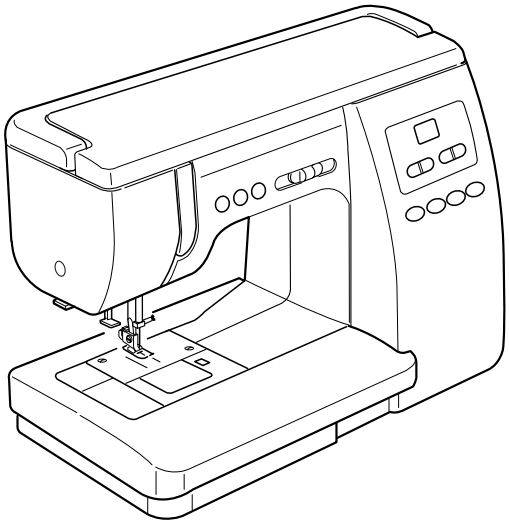

MODEL 6260QC

Table Of Contents

What To Do When 1-3
Service Access
Face Cover 4
Top Cover 5
Belt Cover 6
Base 7
Front Cover 8
Rear Cover 9

Mechanical Adjustment
Needle Thread Tension 10
Presser Bar Height And Alignment 11
Needle Drop Position 12
Stretch Stitch Feed Balance 13
Feed Dog Height 14
Needle Bar Height 15
Needle Timing to Hook 16
Clearance between Needle and Hook 17
Backlash between Hook Gear and Lower Shaft Gear 18
Replacement and Adjustment of Needle Threader Plate 19
Self-Diagnostic Test ..... 20 – 22
Replacing A-Board and Fuse 23
Connector Diagram 24
Replacing Machine Socket 25
Replacing Transformer 26
Replacement and Adjustment of Upper Shaft Sensor 27
Replacing DC Motor 28
Replacing Slide Volume and F-Board 29
Replacing Zigzag Motor 30
Replacing Feed Motor 31
Adjusting Bobbin Winder Switch 32
Adjusting Buttonhole Lever Position 33

What to Do When

Condition	Cause	How to fix	Reference
1. Skipped stitches	1. Needle is not inserted properly.	Insert the needle properly.	
	2. Needle is bent or worn.	Change the needle.	
	3. Incorrectly threaded.	Rethread.	
	4. Needle or thread is inappropriate for fabric being sewn.	Use the recommended sewing needle and thread.	
	5. Sewing on stretch fabric.	Use a #11 blue tip needle.	
	6. Presser foot pressure is too weak.	Adjust the presser bar level to make the pressure stronger.	
	7. Inappropriate needle bar height.	See mechanical adjustment “needle bar height”.	p.15
	8. Inappropriate needle to shuttle timing.	See mechanical adjustment “needle to shuttle timing”.	p.16
	9. Inappropriate needle to shuttle clearance.	see mechanical adjustment “needle clearance to shuttle.”	p.17
2. Fabric not moving	1. Presser foot pressure is too weak.	Adjust the presser bar level to make the pressure stronger.	
	2. Incorrect f.d. height.	See mechanical adjustment “feed dog height.”	p.14
	3. F.d. is in down position.	Raise the f.d.	
	4. Thread on bottom side of fabric is jammed up.	Make sure to bring both needle and bobbin thread under the foot when starting sewing.	
	5. Feed dog teeth are worn.	Change the feed dog.	

Condition	Cause	How to fix	Reference
3. Breaking upper thread	1. Initial sewing speed is too fast. 2. Thread path is incorrect. 3. Needle is bent or dull. 4. Upper thread tension is too strong. 5. Needle size is inappropriate for fabric. 6. Needle eye is worn. 7. Needle hole in needle plate is worn or burred.	Start with medium speed. Use the proper thread path. Replace with a new needle. Adjust upper thread tension correctly. Use appropriate needle for fabric and thread in use. Change the needle. repair the hole or Replace the needle plate.	p.10
4. Breaking bobbin thread	1. Incorrectly threaded bobbin. 2. Too much thread is on the bobbin. 3. Lint is stuck inside the bobbin holder. 4. Thread quality is too low. 5. Thread is jamming around the bobbin.	Thread bobbin correctly. Adjust the position of stopper. Clean the shuttle. Change to a high quality sewing thread. Clear out the jamming thread.	
5. Needle breaks	1. Needle is hitting the needle plate. 2. Needle is bent or worn. 3. Needle is hitting the shuttle. 4. The fabric moves while the needle is piercing it, or the needle zigzags while in fabric. 5. Fabric is being pulled too strongly while sewing.	See mechanical adjustment “needle position”. Change the needle. See mechanical adjustment “needle clearance to shuttle”. See mechanical adjustment “zigzag synchronization”. Guide the fabric gently while sewing.	p.12 p.17 p.27

Condition	Cause	How to fix	Reference
6. Noisy operation	1. Backlash between shuttle hook gear and lower shaft gear is too great.	See mechanical adjustment “backlash (lower shaft gear)”.	p.18
	2. Lower shaft gear is loose.	Eliminate the looseness.	
	3. Inappropriate belt tension.	See mechanical adjustment “motor belt tension”.	p.28
	4. Not enough oil.	Oil all moving parts.	
	5. Upper shaft is loose.	Eliminate the looseness.	
7. Deformed pattern	1. Inappropriate feed balance.	See mechanical adjustment “stretch stitch balance”.	p.13
	2. Inappropriate zigzag synchronization.	See mechanical adjustment “needle synchronization”.	p.27
	3. Upper thread tension is too strong.	See mechanical adjustment “top tension”.	p.10

Service access (1)

Face cover

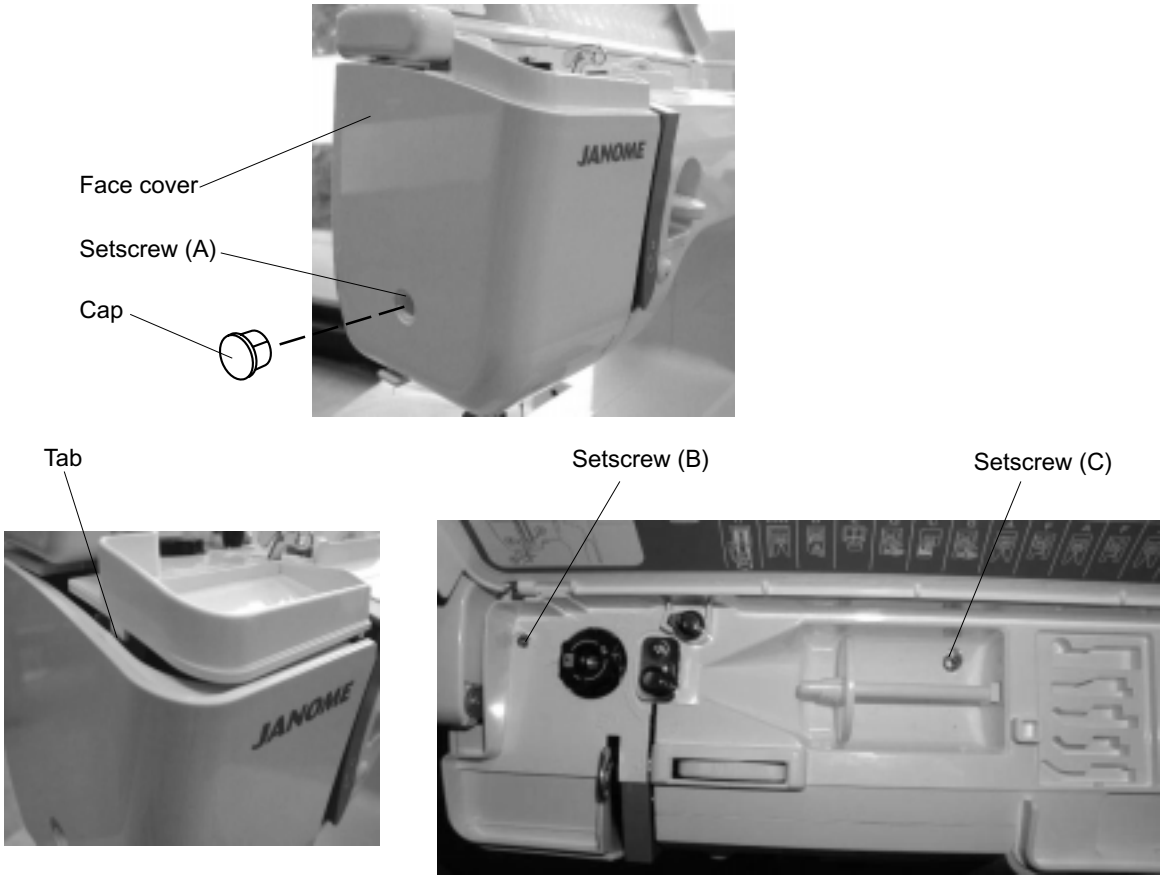

To remove:

1. Remove the cap (A).
2. Remove the setscrews (B) and (C).
3. Lift up the top cover and unfasten the tab of the top cover from the face cover.
   Remove the face cover

To attach:

4. Follow the above procedure in reverse.

Service Access (2)

Top cover

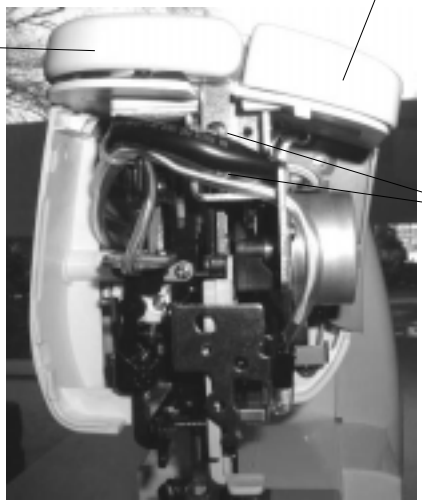

To remove:

1. Remove the face cover (see page 4).
2. Remove the 2 setscrews (A) and remove the handle and top cover.

To attach:

3. Follow the above procedure in reverse.

Service Access (3)

Belt cover

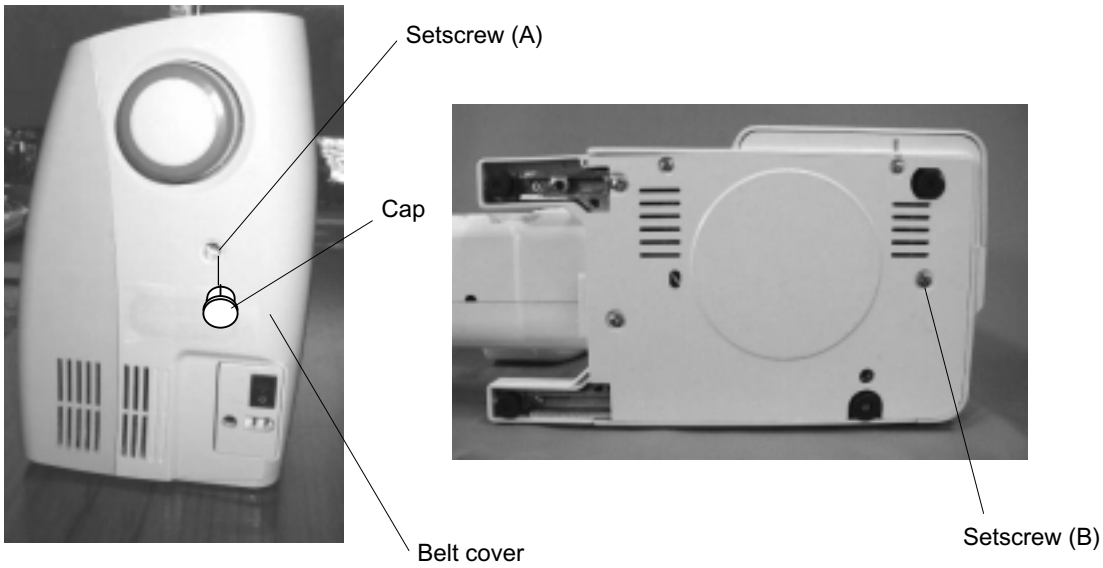

To remove:

1. Remove the face cover and top cover (see pages 4 and 5).
2. Remove the cap.
3. Remove the setscrews (A), (B) and remove the belt cover.

To attach:

4. Follow the above procedure in reverse.

Service Access (4)

Base

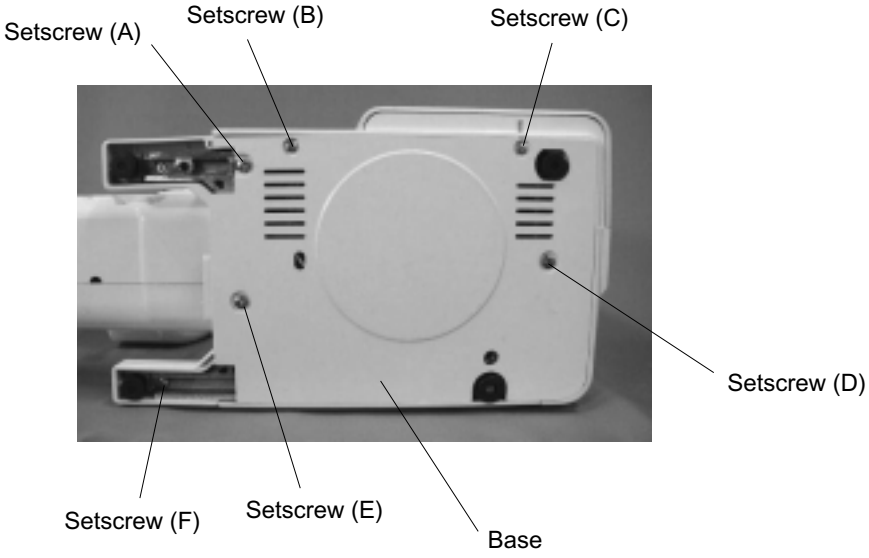

To remove:

1. Remove the setscrews (A) to (F).
   Remove the base.

To attach:

2. Follow the above procedure in reverse.

Service Access (5)

Front cover

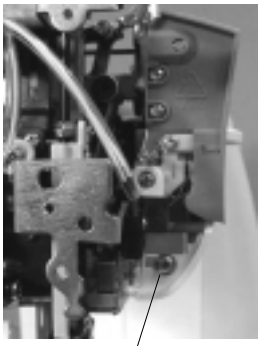

Setscrew (A)

Setscrew (B)

Front cover

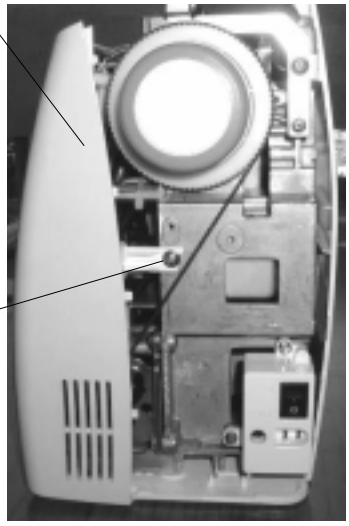

Setscrew (F)

Setscrew (E)

Setscrew (D)

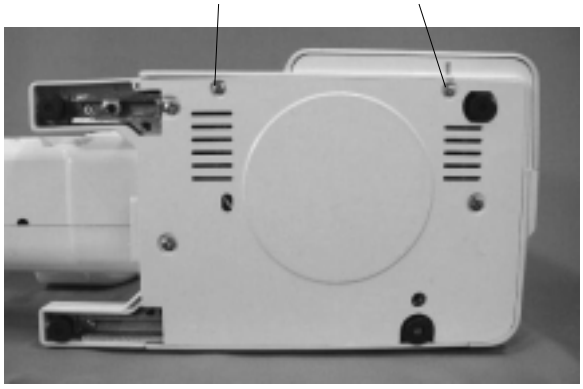

To remove:

1. Remove the face cover, top cover and belt cover. (See pages 4-6.)
2. Remove the setscrews (A) to (E) and loosen the setscrew (F).

To attach:

3. Follow the above procedure in reverse.

Service Access (6)

Rear cover

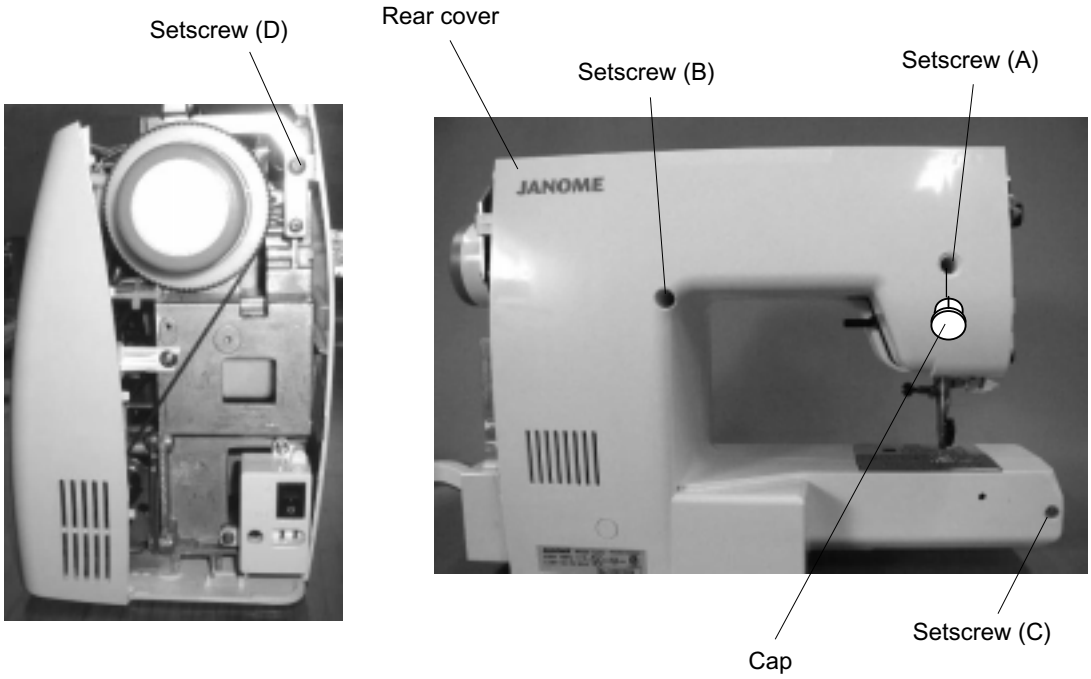

To remove:

1. Remove the face cover, top cover and belt cover. (See pages 4-6.)
2. Remove the setscrews (A), (B), (C), (D) and remove the rear cover.

To attach:

3. Follow the above procedure in reverse.

Mechanical Adjustment

Needle Thread Tension

The standard tension should be 75 to 90 grams when the tension dial is set at “A” (Auto), measured with a #50 white polyester thread being pulled at approximately 50 mm/sec.
If the tension is outside the standard range, adjust it as follows.

Adjustment procedure:
1. Remove the face cover.
2. If the thread tension is too tight: Turn the adjusting screw in the direction of (A).
   If the thread tension is too loose: Turn the adjusting screw in the direction of (B).
3. Attach the front cover.

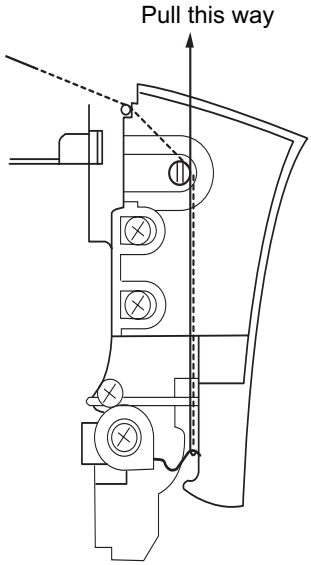

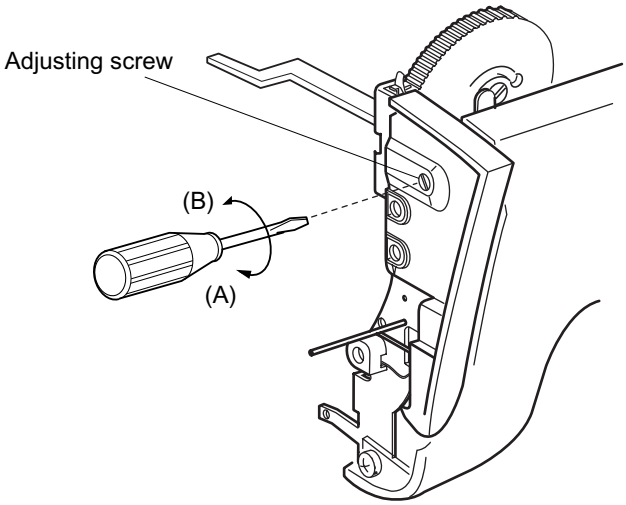

Mechanical Adjustment

Presser Bar Height and Alignment

When the presser foot is raised, the clearance between the presser foot and the needle plate should be 6.0 mm. When the presser foot is lowered, the edge of the foot and the feed dog window on the needle plate should be parallel.

Remove the face cover and raise the presser foot. Loosen the setscrew to adjust the presser foot height (6.0 mm) and the presser foot alignment.
Tighten the setscrew firmly.
Attach the face cover.

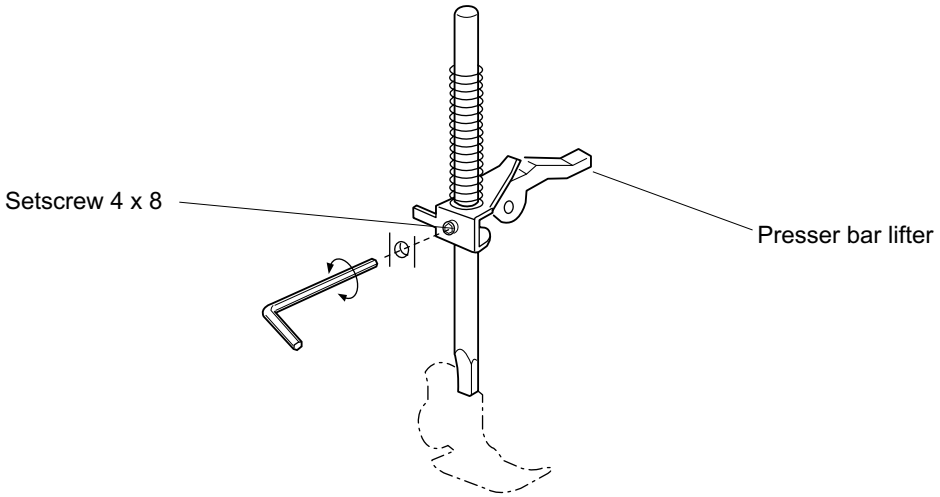

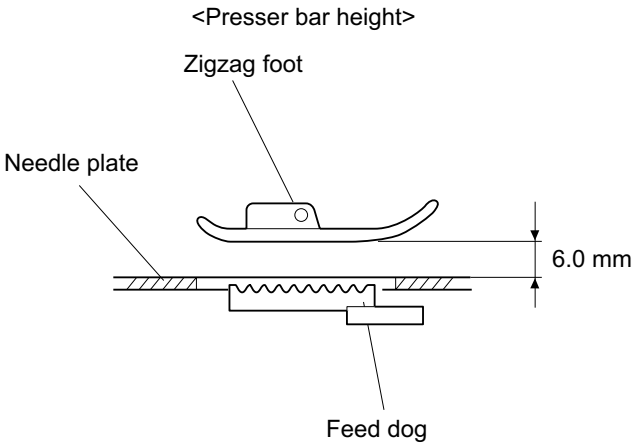

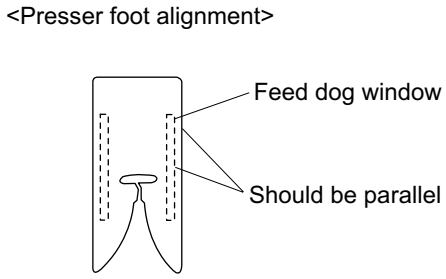

Mechanical adjustment

Needle Drop Position

Set the stitch pattern to "". The standard needle drop position should be at the center of the needle plate hole.
Select zigzag stitch " " and set the stitch width at "7.0". The clearance between the needle and the edge of the needle hole on the needle plate should be at least 0.2 mm on either side. If not, adjust as follows.

Adjustment procedure:
1. Remove the front cover (See page 4.).
2. Loosen the setscrews (A) and (B). Slightly tighten the setscrew (A).
3. Adjust the position of the stitch width adjusting plate so that the needle is in the center of the needle hole when the straight stitch " " is selected.
4. Tighten the setscrews (A) and (B).
5. Check the needle drop position of the zigzag stitch " " with the maximum width. Attach the front cover.

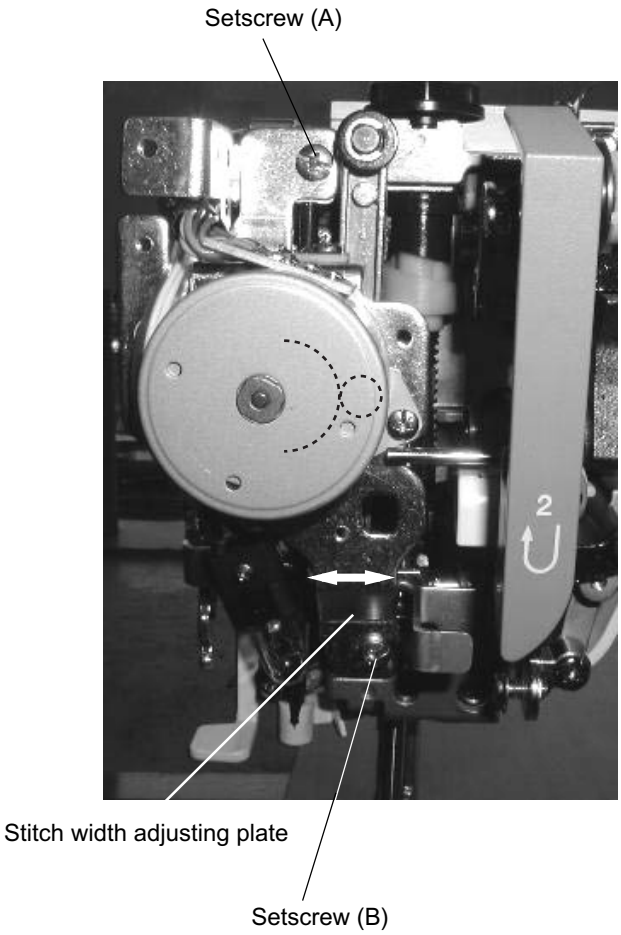

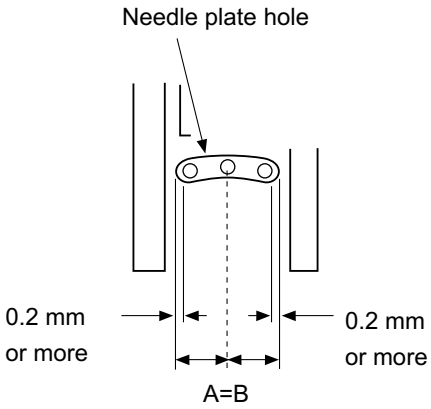

Mechanical adjustment

Stretch Stitch Feed Balance

If the stretch stitch patterns are deformed when sewing the patterns with the feed balancing dial is set at the standard position “ ▶“, correct it as follows:

Adjustment procedure:

1. Select the straight stretch stitch “ ”.
2. Set the feed balancing dial at the standard position “ ▶“.
3. Place a piece of paper on the machine and lower the presser foot. Rotate the handwheel several turns and check the needle marks in the paper.
4. Insert the screwdriver through the opening of the base to access the adjusting screw (C).
   If the forward feed is longer (A>B): Turn the adjusting screw in the direction of (D).
   If the backward feed is longer (B>A): Turn the adjusting screw in the direction of (E).

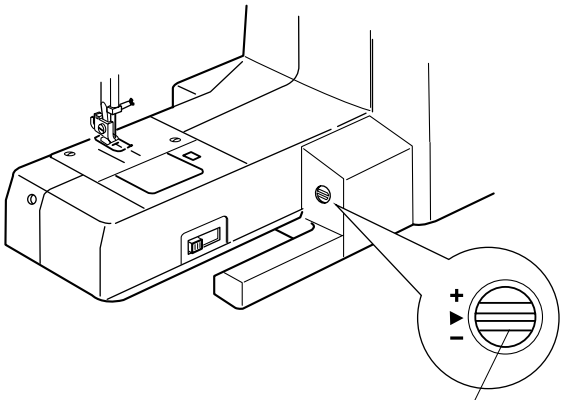

Feed balancing dial

Insert the screw driver through the poening

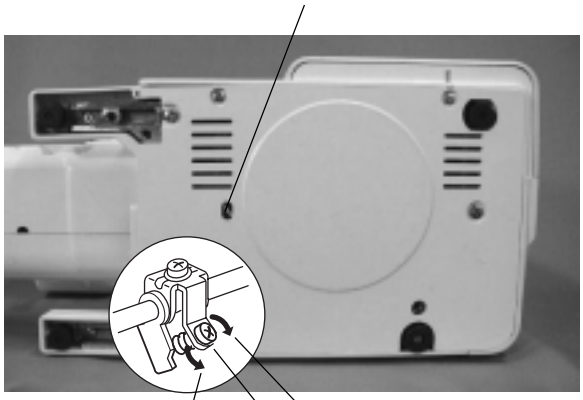

(E)

(D)

Adjusting screw (C)

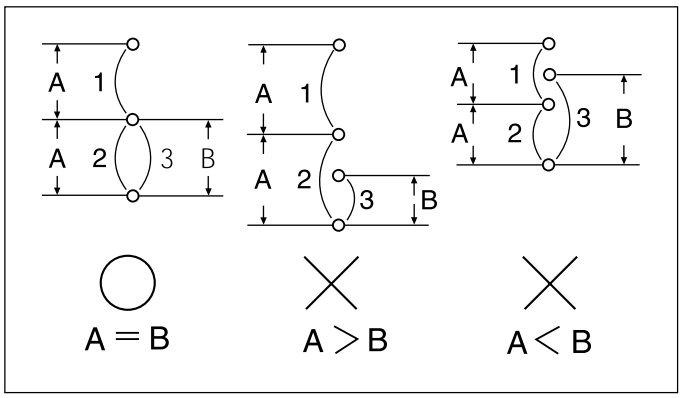

Mechanical adjustment

Feed Dog Height

The height of the deed dog should be 0.8-0.9 mm above the needle plate.

Adjustment procedure:

1. Select the straight stitch “ ”.
2. Set the foot pressure dial at “3” and lower the foot.
3. Loosen the setscrew (A).
4. Turn the handwheel to bring the feed dog to its highest position.
   If the feed dog height is lower than 0.8 mm: Turn the adjusting screw (B) in the direction of (C).
   If the feed dog height is higher than 0.9 mm: Turn the adjusting screw (B) in the direction of (D).
5. Tighten the setscrew (A).

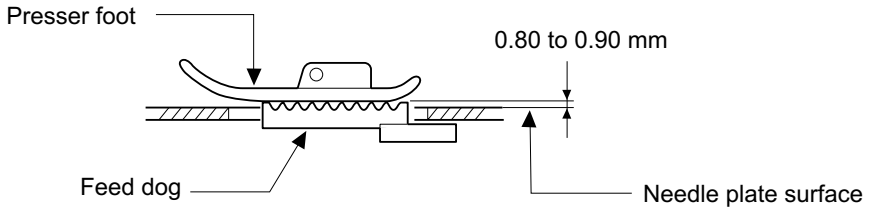

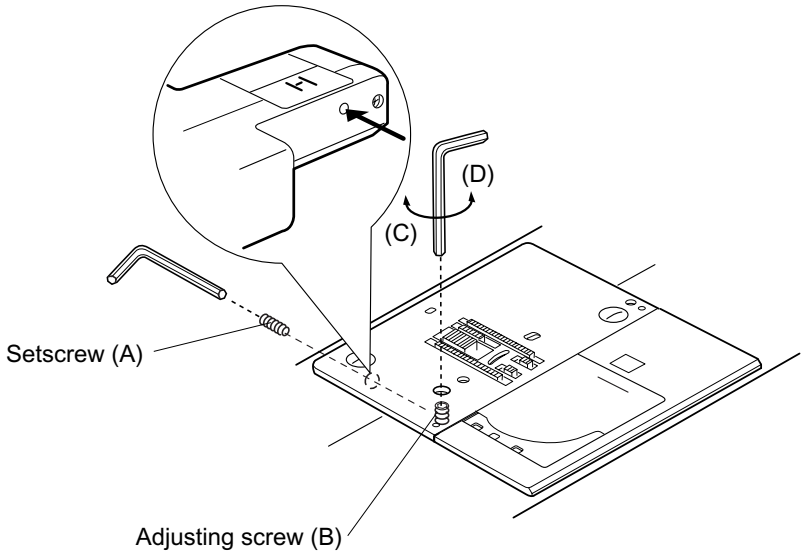

Mechanical adjustment

Needle Bar Height

When the tip of the hook meets the left side of the needle in ascending travel of the needle from its left and lowest position, the distance between the top of the needle eye and the tip of the hook should be in the range of 1.6 to 2.0 mm.

1. Select the straight stitch “ ≋ “ and set the stitch width at “7.0”.
2. Remove the needle plate (A) and bobbin holder (B).
3. Turn the handwheel until the tip of the hook point meets with the right side of the needle.
4. Remove the face cover and loosen the setscrew (C).
5. Adjust the needle bar height by moving the needle bar up or down.
6. Tighten the setscrew (C).
7. Attach the face cover, bobbin case and needle plate.

Note: Be sure that the groove on the needle bar is facing right in the front.

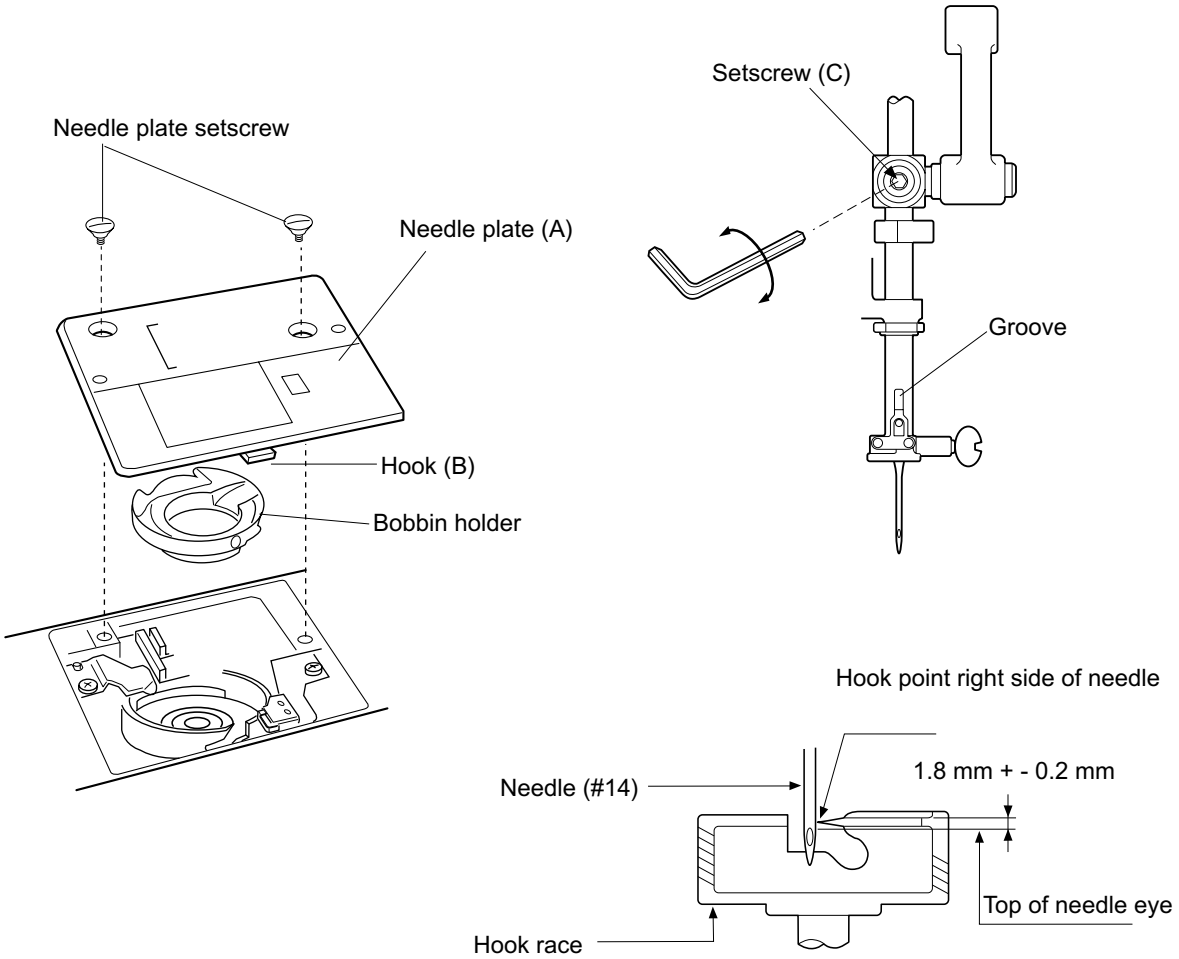

Mechanical adjustment

Needle Timing to Hook

When the hook point meets with the right side of the needle, the height of needle point from its lowest and left most position should be 3.25-3.55 mm.

Adjustment procedure:

1. Select the straight stitch “ ≋ “ and set the stitch width control at “7.0”.
2. Remove the presser foot, needle plate (A) and bobbin holder (B).
3. Remove the front cover (See page 8.).
4. Turn the handwheel to bring the needle to its lowest position.
5. Loosen the 2 setscrews (C) in the lower shaft gear.
6. Turn the handwheel to raise the needle bar 3.4 mm from the lowest position.
7. Rotate the lower shaft gear until the hook point meets with the right side of the needle, while holding the handwheel in place.
8. Tighten the setscrews (C).
9. Attach the front cover.
10. Attach the bobbin holder, needle plate and presser foot.

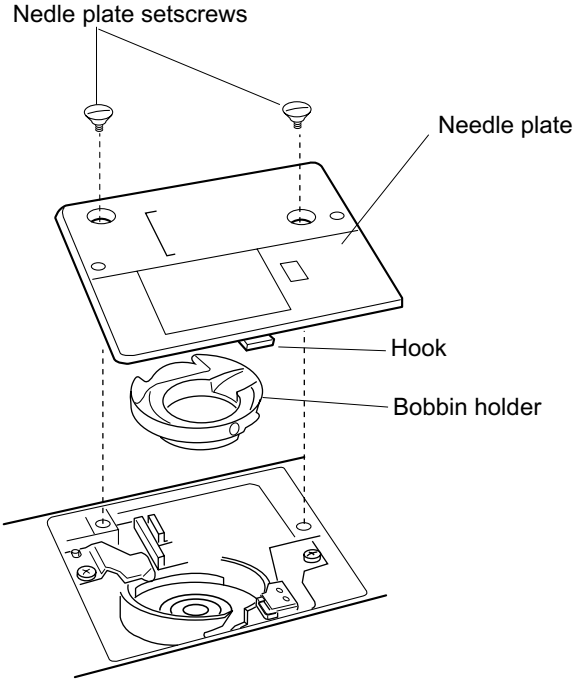

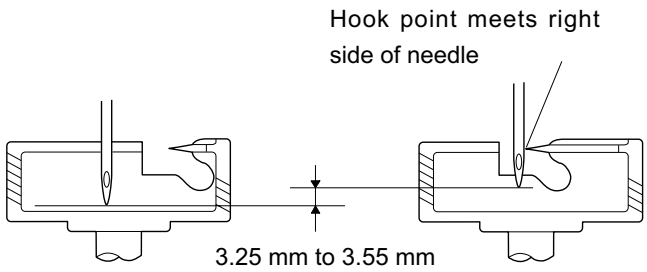

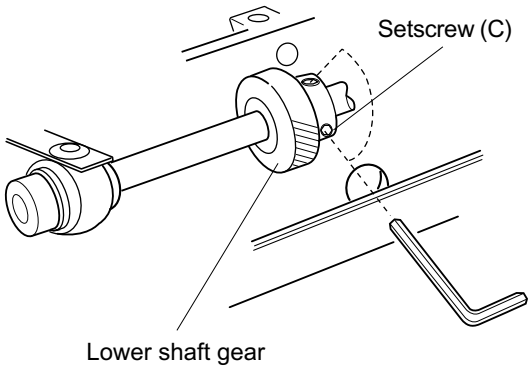

Mechanical adjustment

Clearance between Needle and Hook

The clearance between the needle and hook should be -0.10 to +0.05 mm.

Adjustment procedure:

1. Select the zigzag stitch “ ≋ “ and set the stitch width at “7.0”.
2. Remove the needle plate (A) and bobbin holder (B).
3. Replace the needle with the test pin and tighten the needle clamp screw.
4. Remove the face cover (See page 4.).
5. Turn the handwheel to bring the hook point just behind the test pin. Loosen the setscrew (C) and adjust the clearance between the needle and hook point to –0.10 to 0.05 mm by moving the top end of the needle supporter back or forth.
6. Tighten the setscrew (C).
7. Attach the face cover.
8. Attach the bobbin holder and needle plate. Replace the master needle with the sewing needle.

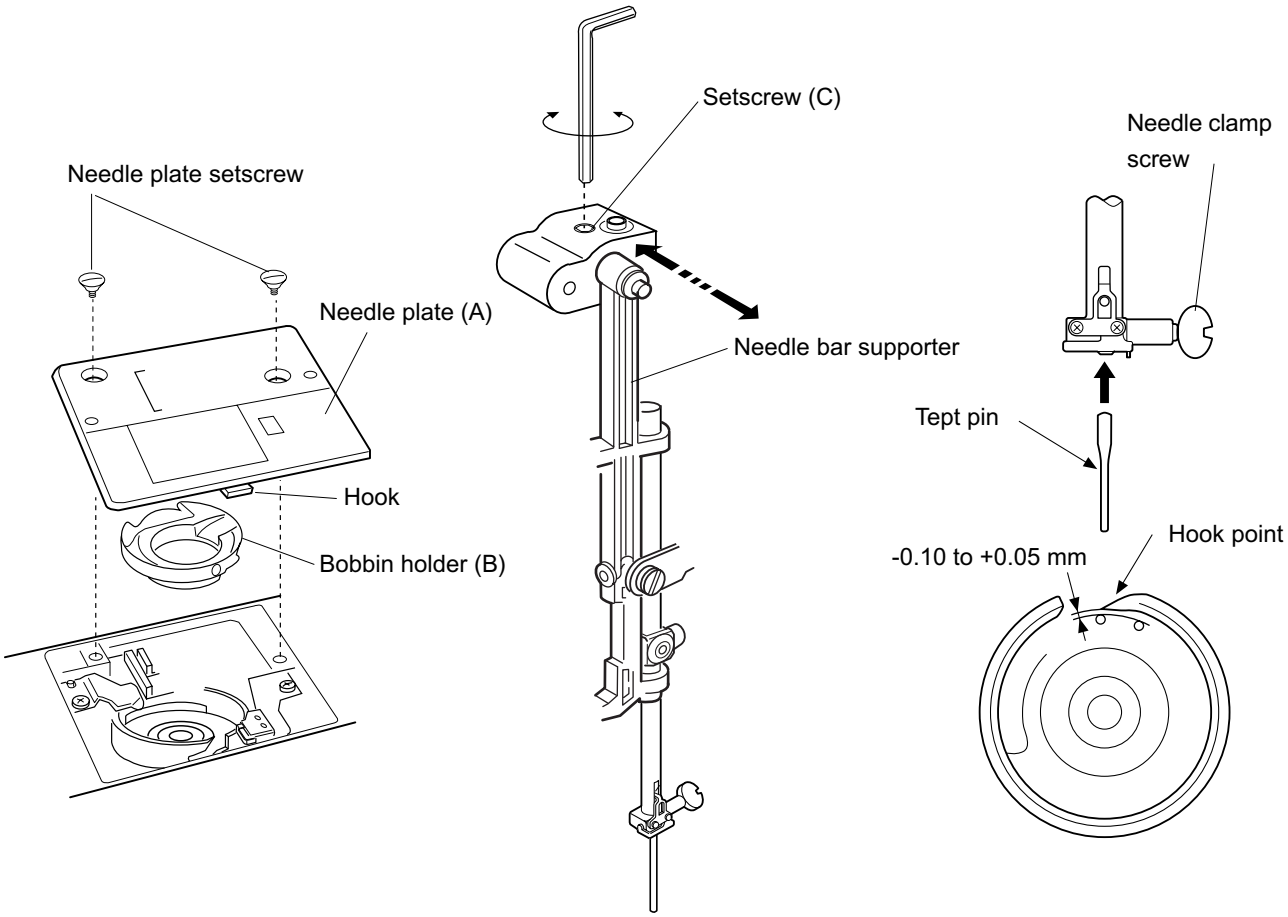

Mechanical adjustment

Backlash between Hook Gear and Lower Shaft Gear

The rotary play of the hook point should be 0.8 mm or less when it is in between the span of the feed dog teeth. And, the gears should turn smoothly.

Adjustment procedure:

1. Remove the needle plate (A) and bobbin holder (B).
2. Remove the front cover (See page 8.).
3. Loosen the setscrew (E).
4. If the rotary play is too large: Turn the lower shaft bushing in the direction of (C).
   If the rotary play is too small: Turn the lower shaft bushing in the direction of (D).
5. Tighten the setscrew (E).
6. Attach the front cover.
7. Attach the bobbin holder and needle plate.

Note: After adjustment of the backlash, check the needle timing to hook and feed dog height, and adjust them if necessary.

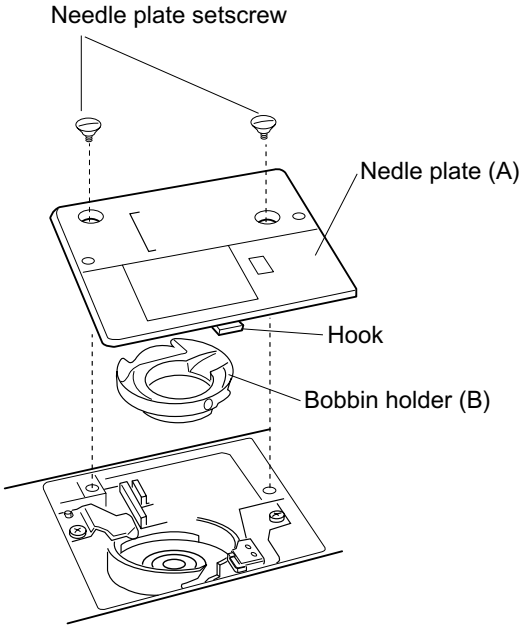

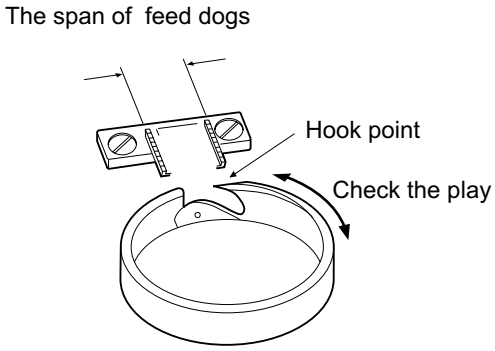

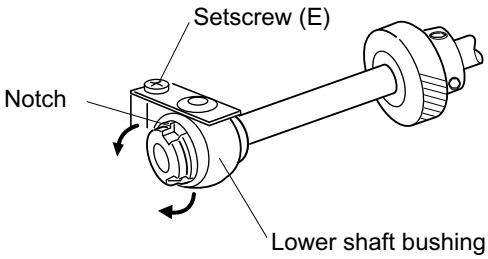

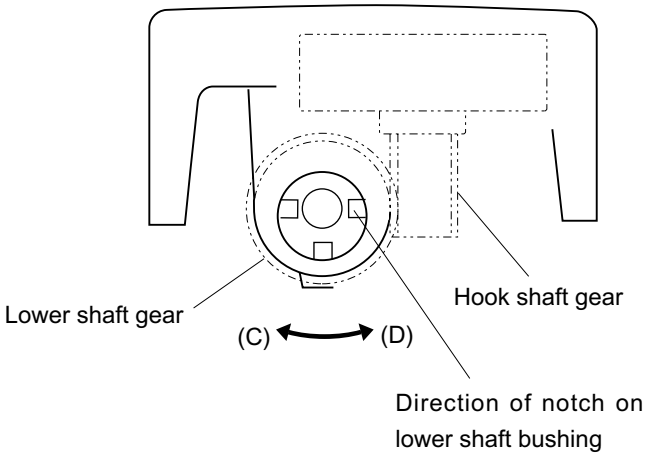

Mechanical adjustment

Replacement and Adjustment of Needle Threader Plate

To replace:

1. Pry out the threader plate holder with a screwdriver while pushing up and holding the threader knob (See fig. 1.).
2. Align the groove on the new threader plate holder with the pin (B) on the threader shaft. Push the threader plate holder (C) up until it snaps in place.

To adjust:

3. If the threader hook thrusts or hits against either left or right edge of the needle eye: Loosen the setscrew (E) and adjust the position of the threader plate (H) (See fig. 2).
4. If the threader hook thrusts against either top or bottom edge of the needle eye, or misses the needle eye: Remove the face cover and loosen the setscrew (F). Move the threader position setting holder (G) up or down to adjust the hook position.

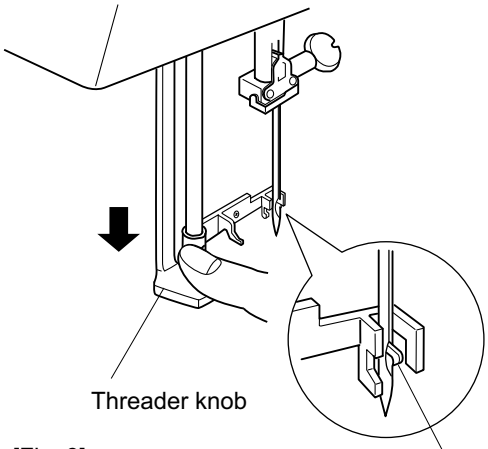

[Fig. 3]

[Fig. 1]

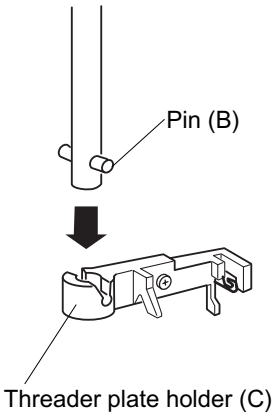

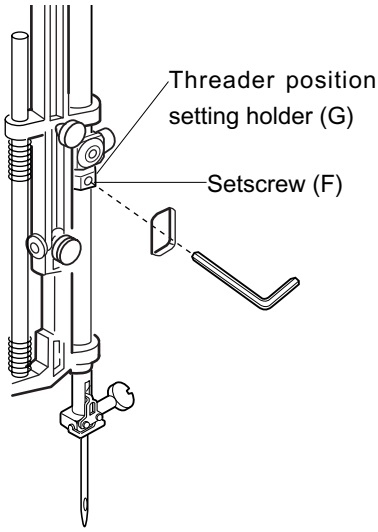

[Fig. 2]

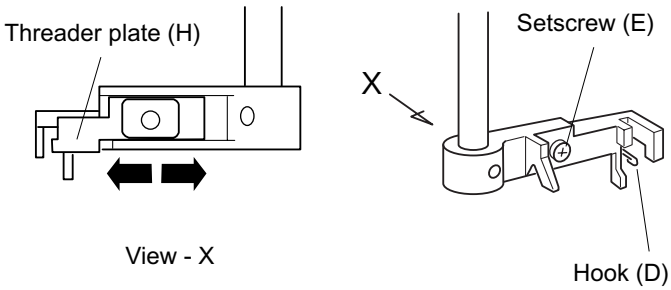

Self-diagnostic Test

Preparation:

1. Turn off the power switch.
2. Move the bobbin winder spindle to the left.
3. Raise the feed dog.
4. Set the speed control lever to the left.
5. Remove the presser foot and raise the presser foot lifter.
6. Turn the hand wheel toward you to raise the needle to its highest position.
7. Connect the foot control to the machine.

Notes:

- Be careful: the sewing machine may start running in its own while in test mode.
- Turn off the power switch before replacing any parts.
- Repeat the diagnostic test until the problem has been resolved.
- You can skip steps in the diagnostic procedure and go directly to the test you want to perform. (Enter self-diagnostic mode, then select the step number of the diagnostic test you require by pressing the needle up/down button.)

To begin:

Turn on the power switch. If any of the following problems occur, take the recommended actions in the order they are shown.

1. The machine does not respond when the power switch is turned on:
   Check each connector connection
   Replace the machine socket.
   Replace the A-board.
   Replace the power transformer.

2. The sewing machine lamp does not light up:
   Replace the light bulb.
   Replace the A-borad.

3. The LED display shows " E3 to E8 " : Replace the A-borad.

To enter self-diagnostic mode:
Turn the power switch on while simultaneously pressing the needle up/down button and the reverse button.
Press the reverse button five times to select menu item "6".
Press the needle up/down button.
Note: If the interval between each step is longer than 2.5 seconds, the machine will revert to normal sewing mode. Should this occur, start over again from the step 1.

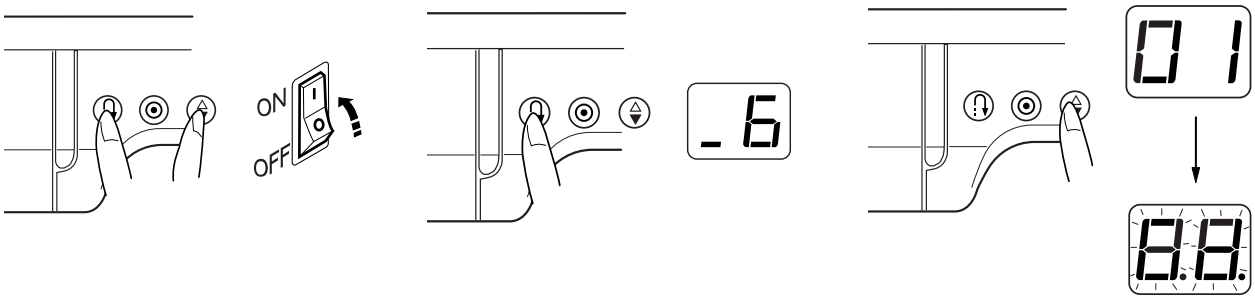

Step and items to check	Procedure	Correct Condition	Defective Condition
01) 7-segment LED	Turn on the power switch while simultaneously pressing the needle up/down button and the reverse button. Press the reverse button five times to select menu item “6”. Press the needle up/down button: the LED indicates “01” for one second. If you don’t press the reverse button within 2.5 seconds, the machine automatically reverts to normal sewing mode.	Beep sounds when the button is pressed. LED displays “8.8.” And it blinks in one second Intervals. No beep sound LED 	Does not enter self-diagnostic mode. LED does not blink on or off. 1. Replace A-board.
02) Mode LED	Press needle up/down button, LED displays “02” for one second.	7-segment LED displays “Ld” and 3 mode LEDs blink in one second intervals. 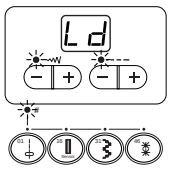	LED does not blink on or off. 1. Replace A-board.
03) Button	Press needle up/down button, LED displays ”03” for one second. Press buttons S1 to S8. Button Button 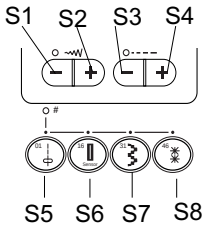 S1 S2 S3 S4 S5 S6 S7 S8	LED displays Button number is displayed when the button is pressed S1 S8	LED display is different from that shown to the left. 1. Replace A-board.
04) Bobbin winder switch	Press needle up/down button, LED displays “04” for one second. Move the bobbin winder spindle to the right. Return it to the left.	LED displays “II”. 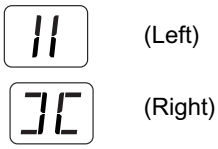 (Left) (Right)	LED display is different from that shown to the left. 1. Adjust bobbin winder switch position. 2. Replace bobbin winder switch. 3. Replace A-board.
05) Not applicable to this model	Skip this step by pressing the needle up/down button		
06) Buttonhole Sensor	Press needle up/down button, LED displays “06” for one second. Lower the buttonhole lever. Move the buttonhole lever back and forth.	When the buttonhole lever is pulled, LED displays “H”. When the buttonhole lever is free (positioned in the center), LED displays “L”. When the buttonhole lever is pushed, LED displays “H”.	LED display is different from that shown to the left. 1. Adjust buttonhole sensor position 2. Replace buttonhole sensor. 3. Replace A-board.

Step and items to check	Procedure	Correct Condition	Defective Condition
07) Upper shaft sensor	Press the needle up/down button, LED displays “07” for one second. Turn the hand wheel toward you to raise and lower the needle to its highest and lowest positions.	When the needle is at the highest position, LED displays “H.L”. H.L When the needle is at the lowest position, LED displays “L.H”. L.H When the needle is halfway, LED displays “L.L. L.L	LED display is different from that shown to the left. 1. Adjust upper shaft shield plate. 2. Replace upper shaft sensor. 3. Replace A-board
08) Sewing speed sensor	Press the needle up/down button. LED displays “08” for one second. Turn the hand wheel clockwise by hand and check the counter value on the LED. (The LED blinks to indicate a counter value of 100.)	LED displays “00” first and the indicated value increases as you turn the handwheel. 00 ↓ 99 (When the value reaches 100, it will return to “00” and one mode LED lights up. For example, 2 mode LEDs and “78” means “278”.) The maximum value should be 370 to 390.	LED display is different from that shown to the left. 1. Replace DC motor 2. Replace A-board
09) Slide volume	Press the needle up/down button, LED displays “09” for one second. Slide the speed control lever from the left to the right, then return it to the left.	When the speed control lever is at the left, LED displays “00”. 00 The indicated value (hexadecimal) increases as you move the speed control lever to the right, and finally it shows “FF” when the lever reaches the right-most position. FF	LED display is different from that shown to the left. 1. Replace slide volume. 2. Replace A-board.
10) Foot control	Press the needle up/down button. The LED displays “10” for one second. Depress the foot control down all the way and release it.	When the foot control is not depressed, LED should display “F0” to “FF” (hexadecimal value). FF When the foot control is fully depressed, LED should display “05” to “2F”. 2F When the foot control is disconnected, LED should show “00” to “04”. 00	LED display is different from that shown to the left. 1. Replace foot control. 2. Replace machine socket. 3. Replace A-board.
11) Zigzag motor	Press the needle up/down button, the LED displays “11” for one second. Press the start/stop Button	LED displays “bS”. bS Zigzag motor is set to the initial position. (Needle centered)	LED display is different from that shown to the left. If LED displays “E1”, replace the zigzag motor or A-board. E1
Feed motor	Turn the hand wheel toward you to lower the needle to its lowest position, then press start/stop button.	LED displays “FS”. FS Feed motor is set to the initial position. (Stitch length: 0)	LED display is different from that shown to the left. If LED displays “E2”, replace the feed motor or A-board. E2
12) DC motor	Press needle up/down button, LED indicates “12” for one second. Press foot control	LED displays “dc”. dc Machine runs at the speed set by the speed control lever. Full left: 80Å`100 spm Full right: 800Å`840 spm.	LED display is different from that shown to the left. If LED displays “E2”, replace the feed motor or A-board. E2 Machine does not run, LED displays “Lo”. Lo 1. Replace DC motor 2. Replace A-board.

Replacing A-Board and Fuse

To Replace the A-board:

1. Remove the rear cover (see page 9).
2. Remove the 3 setscrews (A) and unplug the connectors from the A-board.
3. Remove the 6 setscrews (B) and 2 setscrews (C) then remove the board supporter and function button frame.
4. Remove the 2 setscrews (D) and remove the board case then replace the A-board.

Note:

Static electricity may damage the A-board. When handling the A-board, use a static dissipative wristband and anti-static tabletop mat.

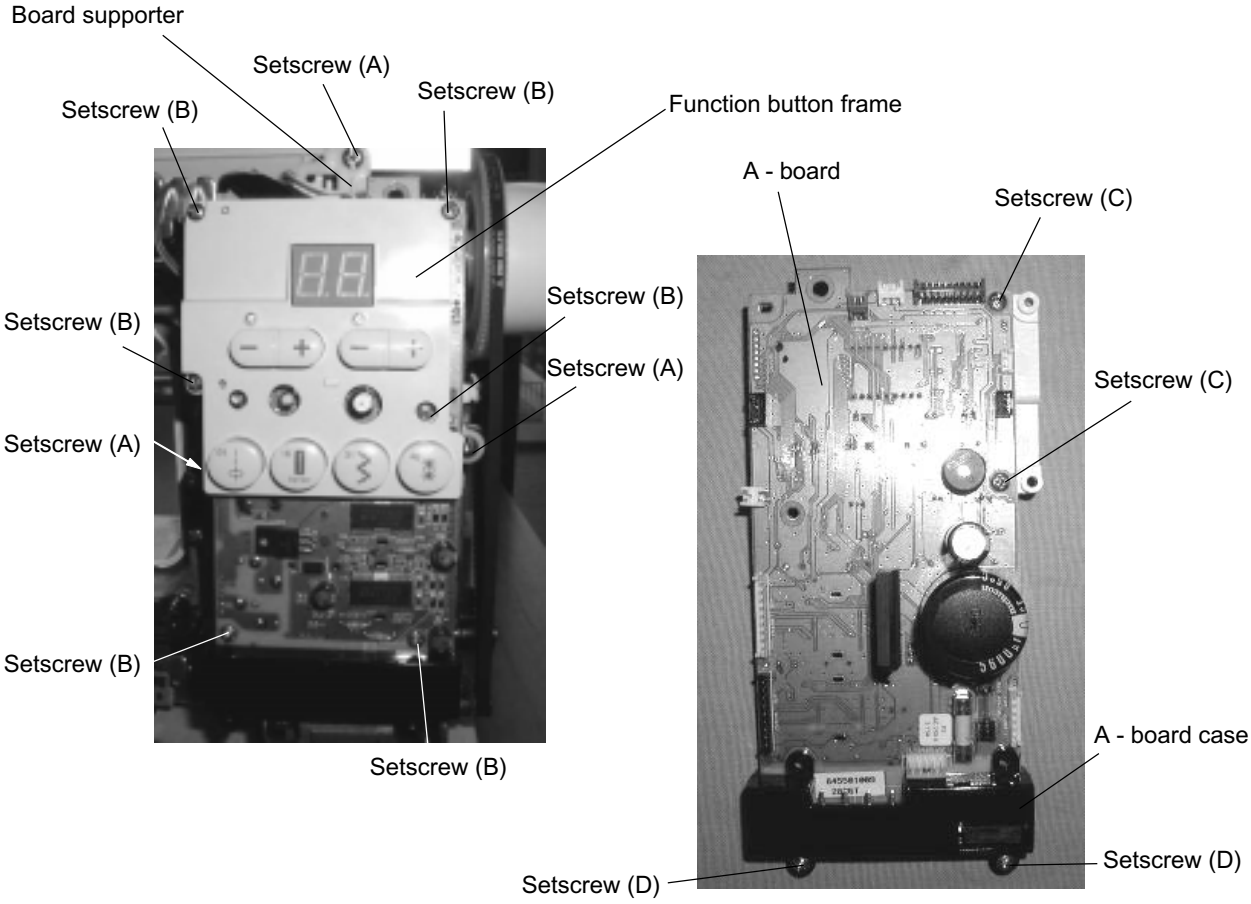

To replace the fuse:

Pry out the fuse with a screwdriver.

Replace the fuse and push it down into the fuse clip.

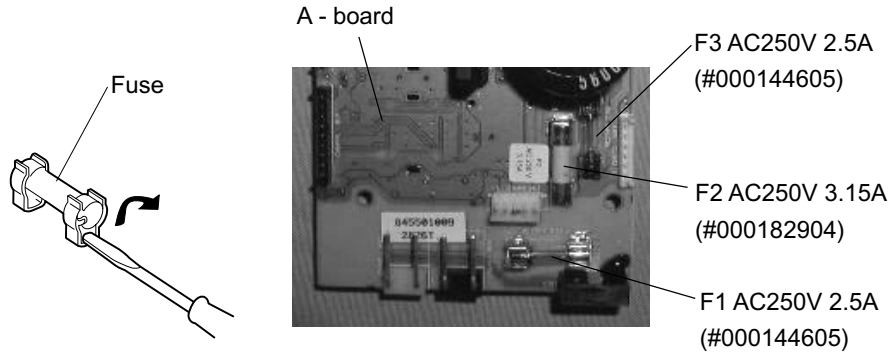

Connector Diagram

Machine socket connector (primary)
Transformer connector (primary)
DC motor connector
Transformer connector (secondary)
BH sensor connector
Lamp connector
F-board connector
Slide volume
Bobbin winder switch connector
Upper shaft sensor connector
Machine socket connector (secondary)
Zigzag motor connector
Feed motor connector

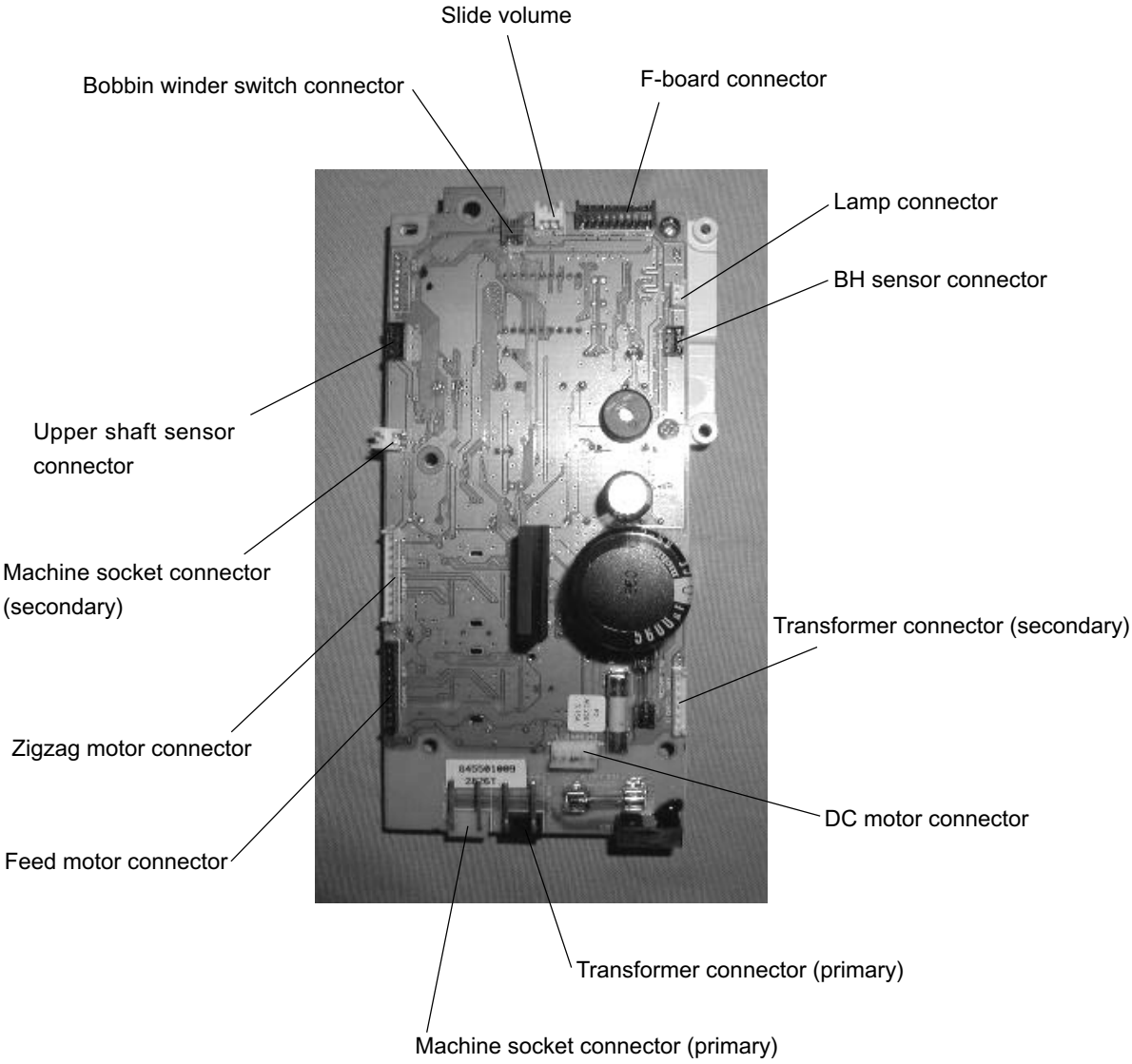

Replacing Machine Socket

To remove:

1. Remove the front cover (see page 8).
2. Remove the board supporter (see page 23) and unplug the machine socket connectors (both primary and secondary).
3. Remove the 2 setscrews (A) and remove the machine socket.

To attach:

4. Follow the above procedure in reverse.

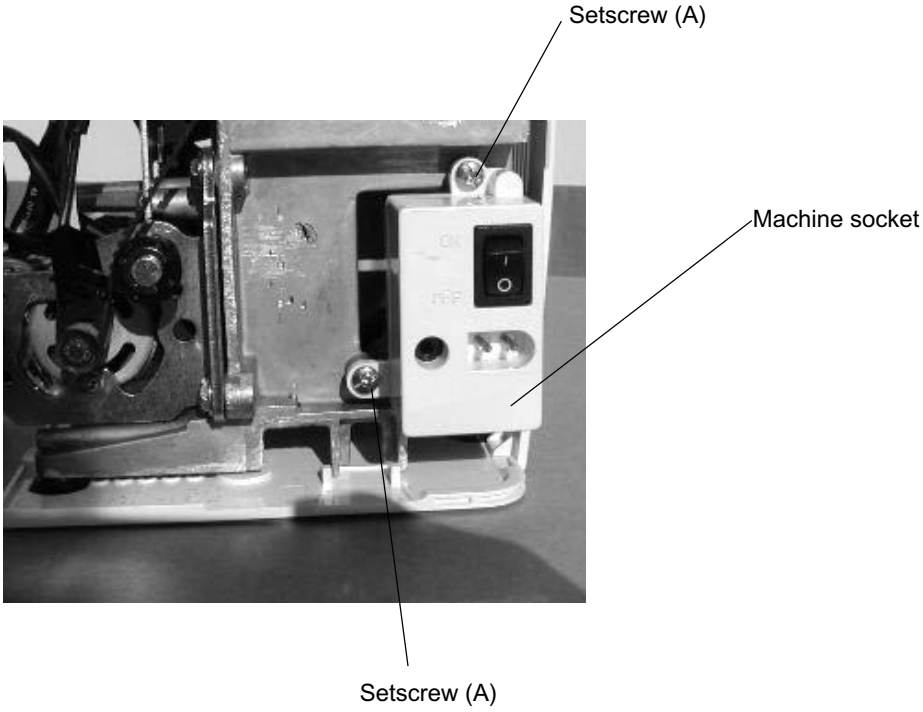

Replacing Transformer

To remove:

1. Remove the front cover (see page 8).
2. Remove the board suppoerter (see page 23) and unplug the transformer connectors (both primary and secondary).
3. Remove the 2 setscrews (A) and remove the transformer.

To attach:

4. Follow the above procedure in reverse.

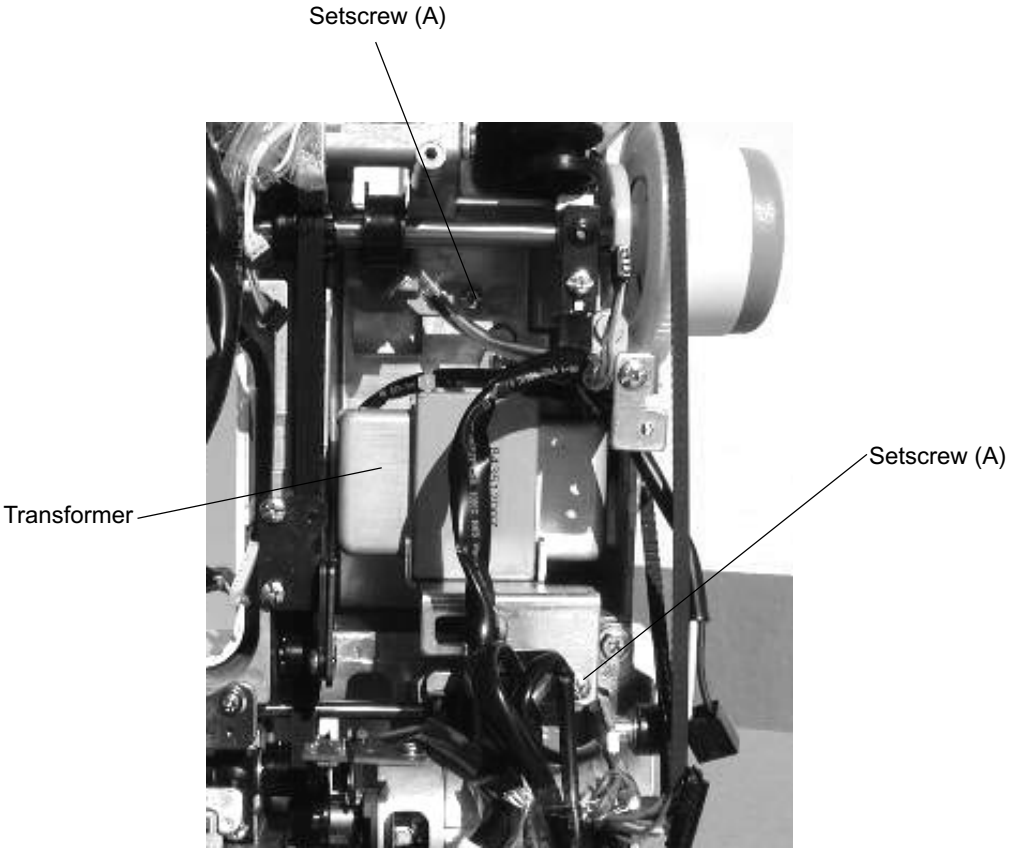

Replacement and Adjustment of Upper Shaft Sensor

During zigzag sewing, lateral movement of the needle should take place 7.4 to 9.8 mm above the needle plate.

Adjustment procedure:

1. Remove the top cover (see page 15).
2. Select the zigzag stitch “ ” and turn the handwheel to check the lateral movement of the needle.
   If the needle starts lateral movement higher than 9.8 mm: Loosen the setscrew (C) and turn the upper shaft shielding plate in the direction of (A).
   If the needle starts lateral movement lower than 7.4 mm: Loosen the setscrew (C) and turn the upper shaft shielding plate in the direction of (B).
3. Attach the top cover.

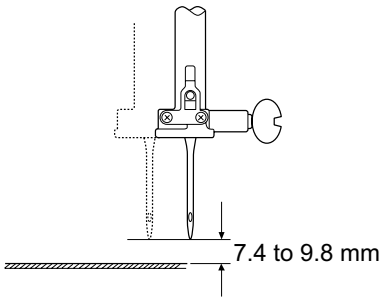

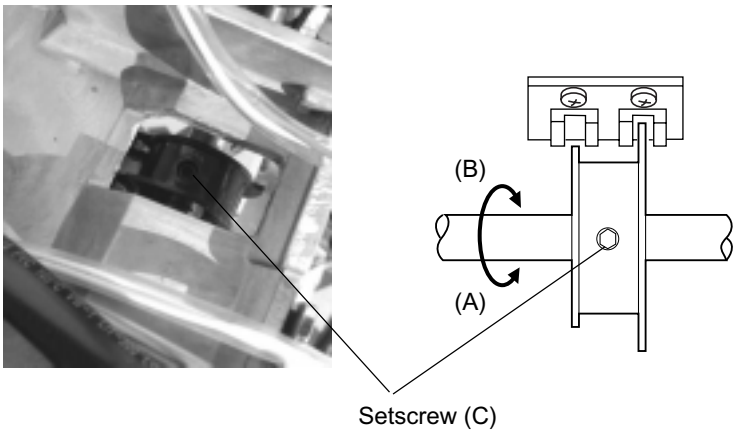

To replace the upper shaft sensor:

1. Remove the front cover (see page 8).
2. Remove the board supporter (see page 23) and unplug the upper shaft sensor connector.
3. Remove the 2 setscrews (D) and remove the sensor mounting.
4. Remove the 2 setscrews (E) and remove the upper shaft sensor.

To attach:

5. Follow the above procedure in reverse.

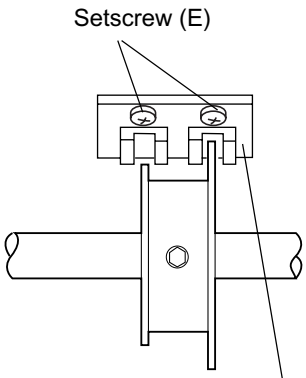

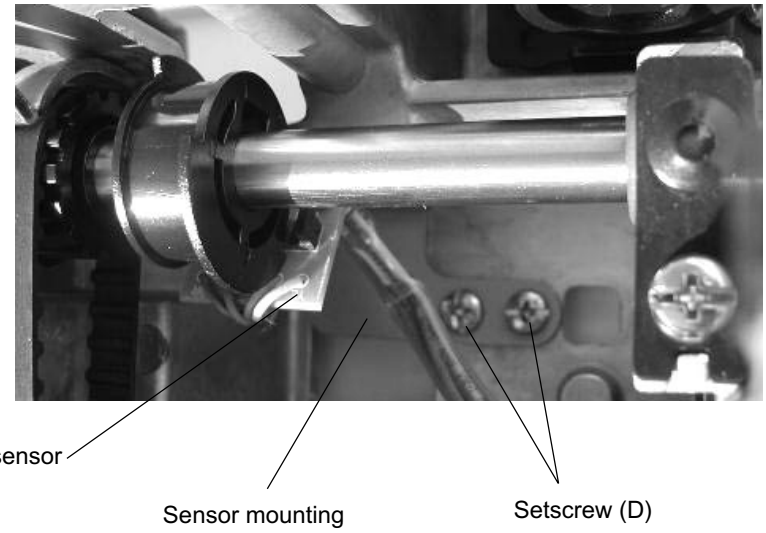

Replacing DC Motor

To remove:

1. Remove the front cover (See page 8.).
2. Remove the board supporter (see page 23) and unplug the DC motor connector.
3. Remove the 2 setscrews (A) and replace the DC motor.

To attach:

4. Follow the above procedure in reverse.

To adjust motor belt tension:

1. Slightly loosen the 2 setscrews (A). Move the motor to adjust the motor belt tension so that the belt is bent 7-9 mm when pressing the middle of the belt with approximately 300 grams of pressure.
2. Tighten the setscrews.

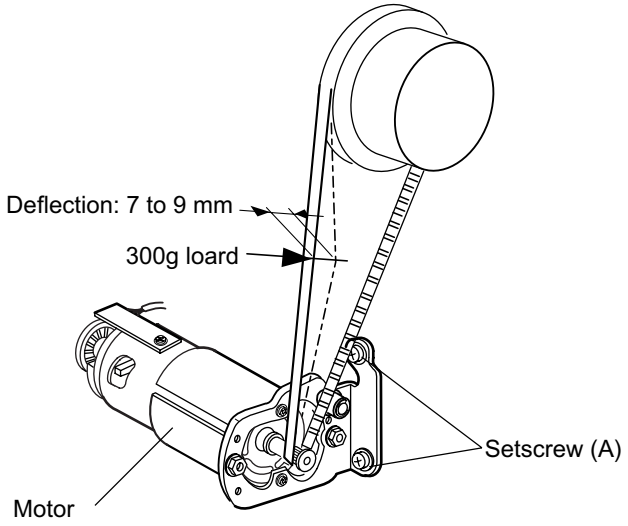

Replacing Slide Volume and F-Board

Replacing the slide volume control

To remove:

1. Remove the front cover (see page 8).
   Unplug the slide volume connector.
2. Remove the 6 CS rings and replace the slide volume.

Replacing the F-board

To remove:

1. Remove the front cover (see page 8).
   Unplug the F-board.
2. Remove the 5 CS rings.
3. Remove the 3 setscrews (A) and replace the F-board.

To attach:

4. Follow the above procedure in reverse.

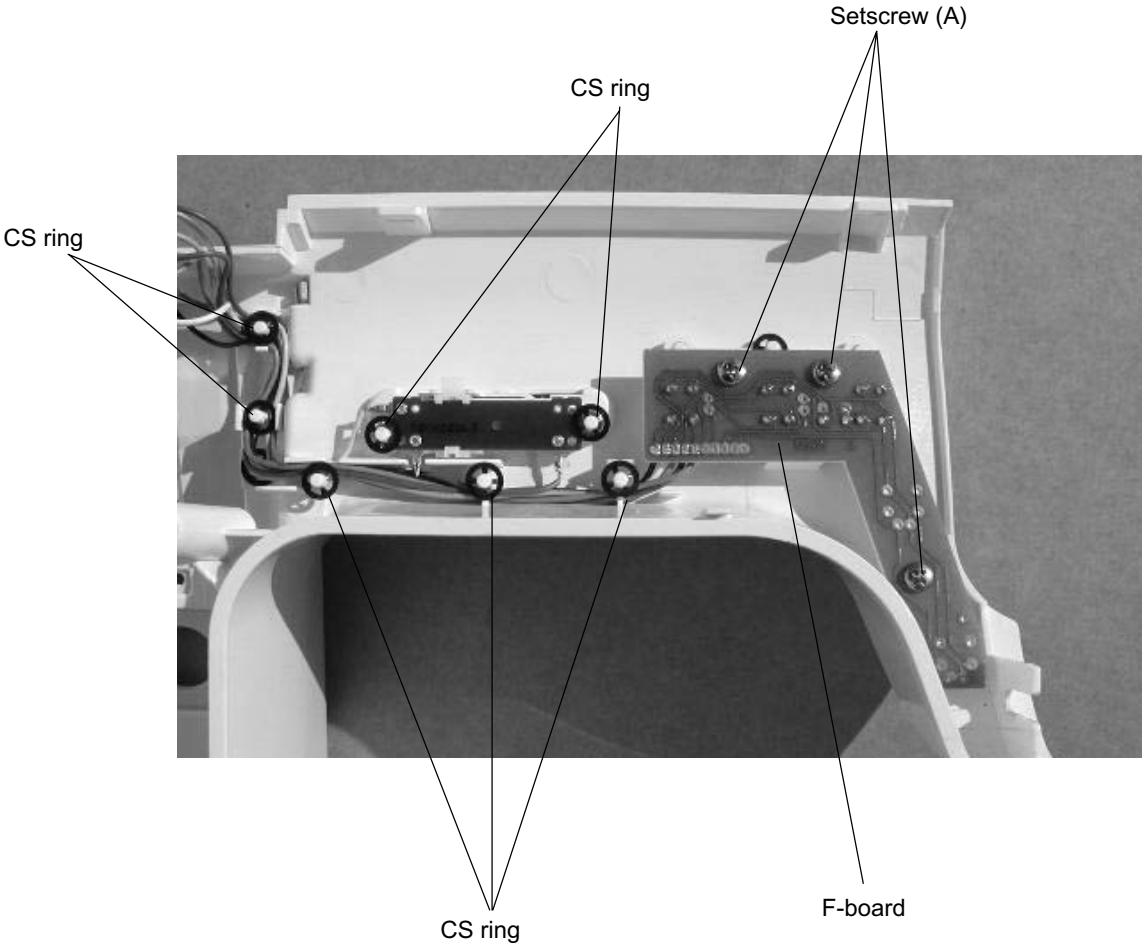

Replacing Zigzag Motor

To remove:

1. Remove the front cover (see page 8).
2. Unplug the zigzag motor connector.
3. Remove the 2 setscrews (A) and replace zigzag motor.

To attach:

4. Follow the above procedure in reverse.

Note:

After replacement, check the needle drop position and adjust it if necessary (see page 13).

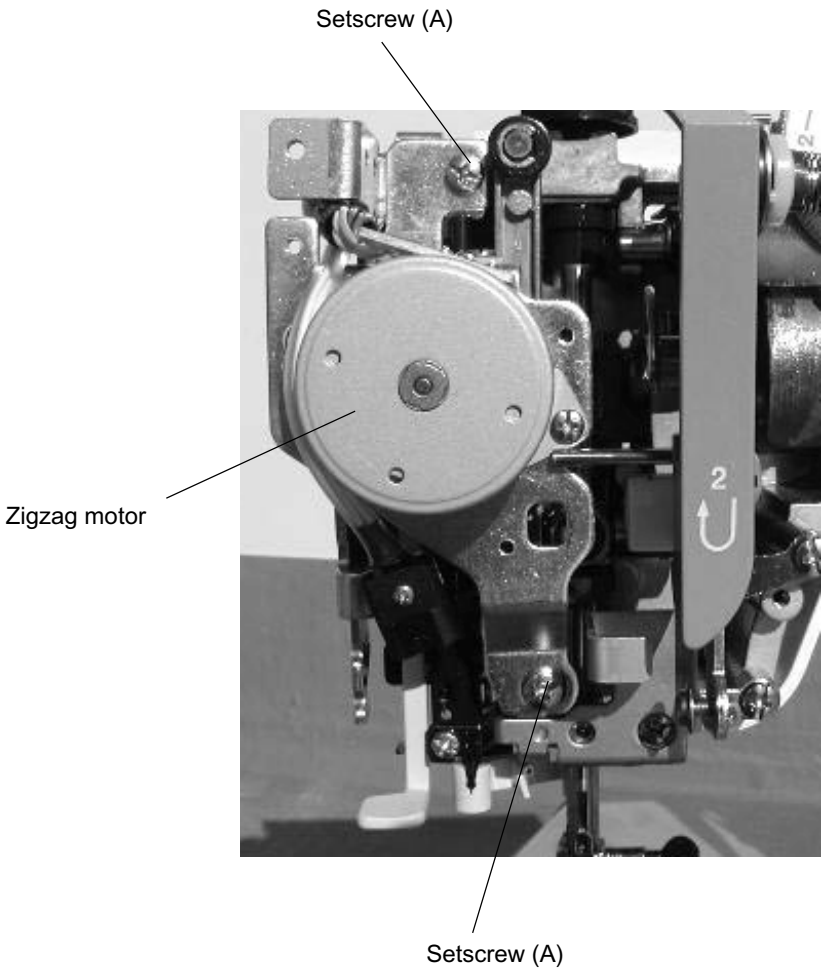

Replacing Feed Motor

To remove:

1. Remove the front cover (see page 8).
2. Unplug the feed motor connector.
3. Remove the 2 setscrews (A) and replace feed motor.

To attach:

4. Follow the above procedure in reverse.

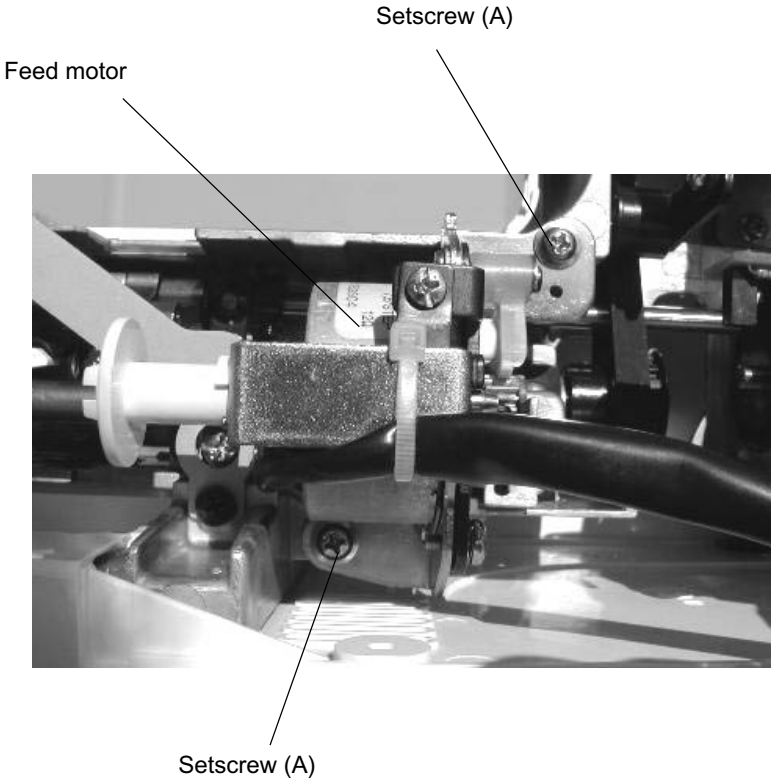

Adjusting Bobbin Winder Switch

The LED display shows “ 01 ” when the bobbin winder spindle is set to the left and “ JC “ when the bobbin winder spindle is set to the right.

Adjustment procedure:

1. Remove the top cover (see page 8).
2. Set the bobbin winder spindle in the sewing position and loosen the setscrew.
   Adjust the clearance between the bobbin winder arm and the switch mounting to 0.7-1.3 mm.
3. Tighten the setscrew.
4. Attach the top cover.

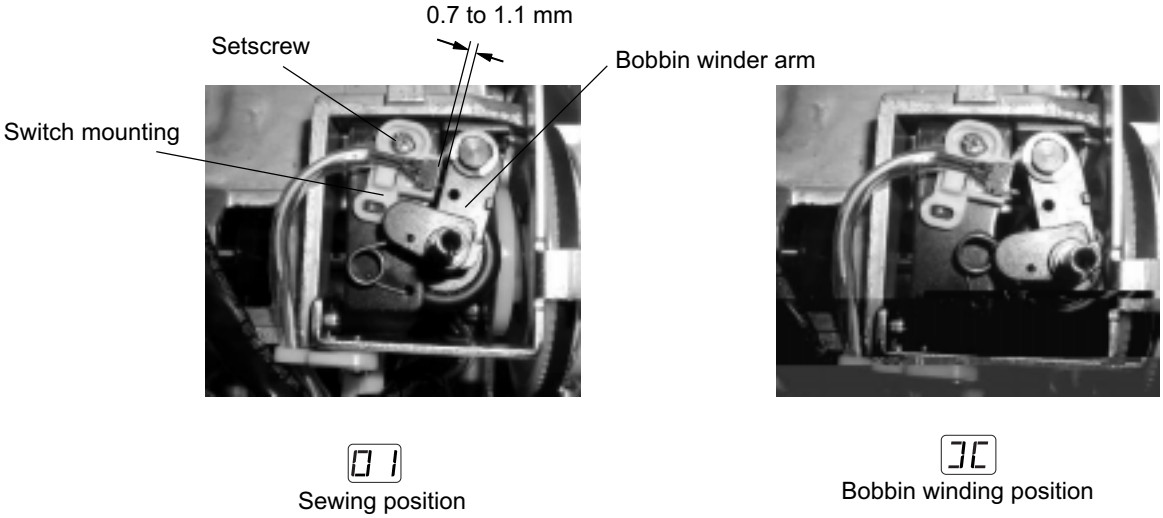

Adjusting Buttonhole Lever Position

To adjust the buttonhole lever guide:

1. Enter the buttonhole sensor adjusting mode. (See below. The LED should display “H” or “L”.)
2. Remove the face cover (see page 4) and loosen setscrew (A).
3. Move the buttonhole lever guide so the LED displays “L” when the buttonhole lever is lowered. Tighten setscrew (A).

To adjust the buttonhole sensor position:

4. Attach the buttonhole foot (R).
5. Lower the buttonhole lever to its lowest position and open a 1.6 mm gap between the slider and buttonhole foot.
6. Turn the adjusting screw (B) to the left until the LED display changes from “L” to “H”.
7. Next, turn the adjusting screw to the right until the LED display changes from ”H” to “L”.
8. When the gap of the buttonhole foot is 1.4 mm, the LED should display “H”. When the gap is 1.8 mm, the LED should display “L”.
9. Turn off the power switch.
10. Attach the face cover.

Note: If there is any lint or dust in the buttonhole sensor slit, clean it out with a swab.

To enter adjusting mode:

Turn the power ON while pressing the needle up/down button and reverse button simultaneously. (Hold both buttons down until the LED displays the adjusting mode window.)

Press the reverse button to select step number “_2”.
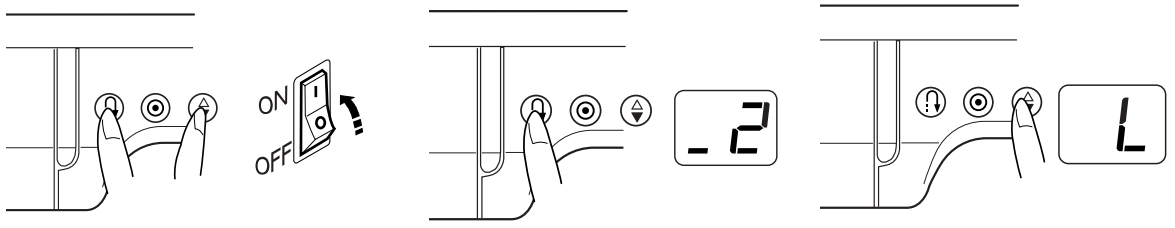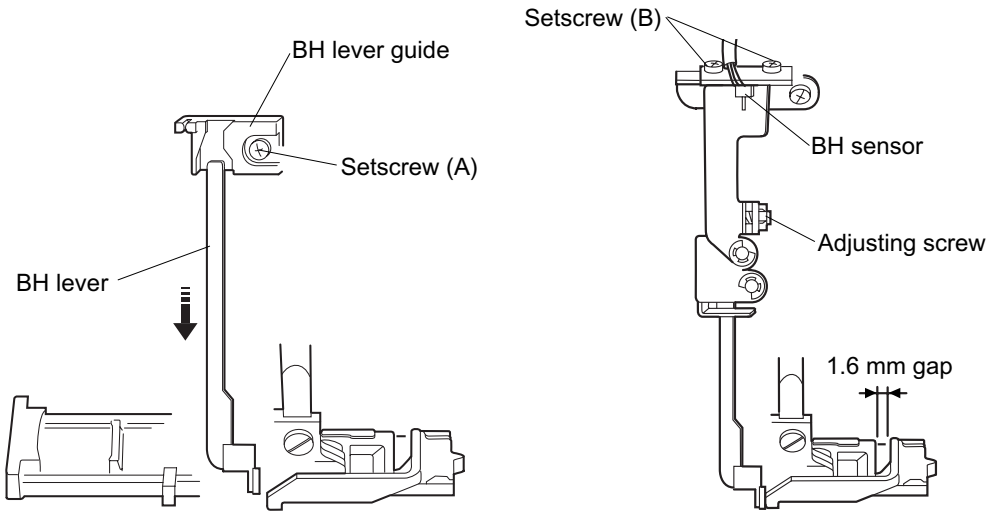
Press the needle up/down button.