PARTS CATALOGUE FOR

COMPUTERIZED SEWING MACHINE

NV1500D
NV1500

07.2005.

CONTENTS

(1) PRINCIPAL PARTS 2

LCD SUPPLY ASSEMBLY 6

(2) UPPER SHAFT / NEEDLE BAR, PRESSER MECHANISM 8

(3) FEED, ROTARY HOOK / SIDE FEED / THREAD CUTTING MECHANISM 10

(4) ROTARY HOOK DRIVE / BOBBIN WINDER MECHANISM 12

(5) THREAD GUIDE MECHANISM / THREAD HOOK MECHANISM 14

(6) ELECTRONIC PARTS / MOTOR UNIT 16

(7) EMBROIDERY UNIT 18

(8) ATTACHMENTS / PACKING MATERIALS / PRINTED MATTER 22

NEEDLE-PRESSER MODULE 24

FEED MODULE 28

THREAD CUTTER MODULE 32

(1) PRINCIPAL PARTS

No.	CODE	NAME	REMARKS
1	XD0304052	REAR COVER	
2	087411016	TAPTITE CUP B M4X10	
3	087411416	TAPTITE CUP B M4X14	
4	XC7717051	PLATE A	
5	XC7718051	PLATE B	
6	XC9376151	FACE PLATE ASSY	
7	X80321001	NT LOWER THREAD CUTTER	
8	146200051	RETAINING RING, CS4	
9	XC2747051	NEEDLE THREAD LEVER KNOB	
10	XC9386051	NEEDLE THREAD LEVER SHAFT	
11	XC9387051	NEEDLE THREAD LEVER	
12	XD0119050	NEEDLE THREAD LEVER SLIDER	
13	XA8390051	SCREW	
14	XC9388051	THREAD THROUGH LEVER SPRING	
15	XA6320050	SHAFT PRESSER PLATE	
16	XA5525051	WASHER,PLAIN	
17	138433051	TAPTITE,PAN B M3X6	
18	XC0508050	RUBBER WASHER	
19	X59629051	TAPTITE,BIND B M3X10	
20	0A6401206	SCREW PAN (T WASHER) M4X12	
21	XC7566051	SCREW, PAN(S/P WASHER)M4X8	
22	XD0314051	FRONT COVER	
23	XC7723051	SS-BUTTON	
24	XC7724051	BUTTON	
25	XC7728051	SV KEYTOP	
26	XC7729051	SV JOINT PLATE	
27	XC8199051	ASSY:SS PCB D6	
28	XC8202051	ASSY:VR PCB D6	
29	XC7981051	PCB UNIT:LED LAMP-D6R	
30	085311415	TAPTITE BIND B M3X14	
31	136681051	TAPTITE, BIND B M3X8	
32	X59629051	TAPTITE,BIND B M3X10	
33	XC7838051	PLATE C	
34	XC7839051	PLATE D	
35	X53169050	BAND	
36	137947001	CLIP	
37	087411016	TAPTITE CUP B M4X10	
38	XC8680050	S HOLDER	
39	XC4433051	SCREW,PAN(T WASHER)M3X6	
40	XC8478250	INVERTER COVER	
41	XA9400151	CONNECT COVER	
42	146200051	RETAINING RING, CS4	
43	XC7686051	HANDLE	
44	XC7731051	HANDLE HOLDER L ASSY	

No.	CODE	NAME	REMARKS
45	XC7733051	HANDLE HOLDER R ASSY	
46	048040346	RETAINING RING E4	
47	XC7736051	BASE PLATE	
48	XA1805051	BASE RUBBER A	
49	XA4687051	ADJUSTING SCREW ASSY	
50	XA4689051	BASE PLATE RUBBER	
51	XA9387050	BASE PLATE RUBBER	
52	062500816	SCREW PAN M5X8	
53	XA4689051	BASE PLATE RUBBER	
54	XC7737051	KNEE LIFTER ASSEMBLY	
55	XC7738051	LIFTER BASE	
56	XC7739051	SHAFT	
57	XA6215251	SPRING,PLATE	
58	060260316	SCREW BIND M2.6X3	
59	X51383050	WASHER,THRUST	
60	XC7740051	LIFTER LINK	
61	XA6252051	SCREW	
62	028040242	WASHER SPRING 2-4	
63	026040236	WASHER PLAIN M 4	
64	XC7741051	SPRING	
65	XC8208051	ASSY:KNEE LIFTER SENSOR	
66	XA6493051	PT LEVER	
67	012300632	SET SCREW SOCKET (FT) M3X6	
68	XC7742051	SPRING	
69	026060235	WASHER PLAIN M 6	
70	X52569001	NUT	
71	XC7743051	STOPPER PLATE ASSY	
72	0A5400806	SCREW PAN (S/P WASHER) M4X8	
73	XC8624051	KNEE LIFTER SPRING	
74	XC8573051	WASHER,WAVE SPRING	
75	060400616	SCREW BIND M4X6	
76	XC9511051	LEAD WIRE ASSY MAIN BODY D6M	
77	048030346	RETAINING RING E3	
78	XC7746051	CONNECTOR HOLDER ASSY	
79	XC7632051	INLET ASSY:D6 US (U.S.A., CAN)	
	XC8419051	INLET ASSY:D6 EU (OTHER)	
80	T31049001	COATING CLIP CS-6	
81	060300616	SCREW BIND M3X6	
82	060400616	SCREW BIND M4X6	
83	X57908051	TAPTITE,BIND S M4X10	
84	XD0529051	ACCESSORY TABLE	
85	XD0697051	ACC TABLE F COVER SUPPLY ASSY	
86	XC9398051	ACCESSORY TABLE REAR COVER	
87	138644051	NOTCHED SPRING	

(1) PRINCIPAL PARTS

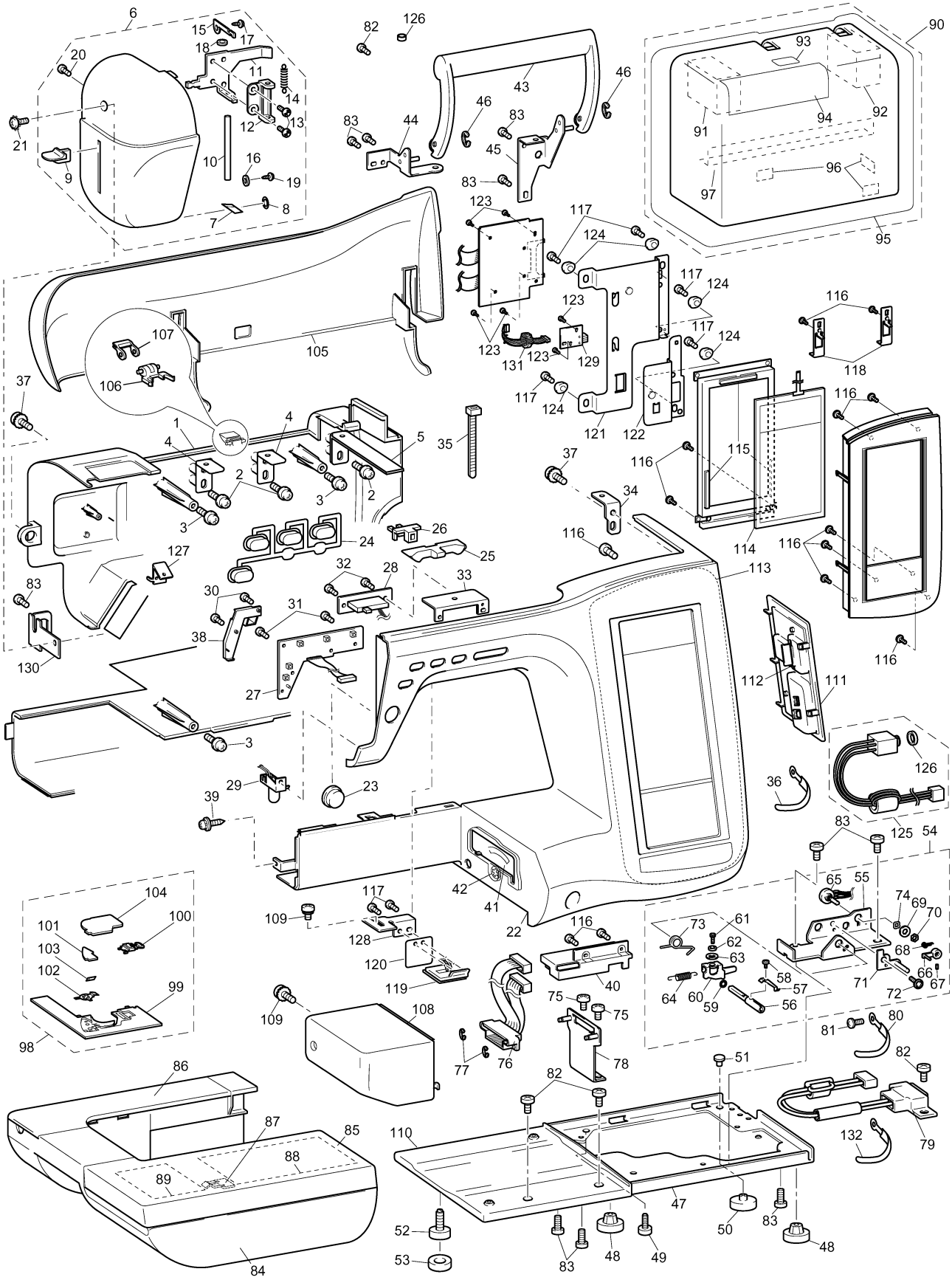

(1) PRINCIPAL PARTS

No.	CODE	NAME	REMARKS
88	XD0528050	SPONGE A	
89	XD0609050	SPONGE B	
90	XC9640151	CASE ASSEMBLY	
91	XC9400150	UNDER CASE POLYSTYRENE L	
92	XC8183150	UNDER CASE POLYSTYRENE R	
93	XA3028052	DECORATION PLATE	
94	XC8378051	CASE COVER	
95	XC8613051	BAG.900X600H	
96	125440050	CASE FELT	
97	XC7253051	SHEET FOR D6 HARDCASE	
98	XC2364052	NEEDLE PLATE B ASSY	
99	XC2365052	NEEDLE PLATE B	
100	XC2366152	SLIDE BUTTON	
101	XC2367052	CUTTER COVER	
102	XC2368051	SPRING PLATE	
103	X80321001	NT LOWER THREAD CUTTER	
104	XC2369051	NEEDLE PLATE COVER	
105	XC7690055	TOP COVER	
106	XZ0391051	UPPER COVER HOLDER	
107	XC3286001	UPPER COVER HINGE OEM	
108	XC7691051	FREE ARM COVER	
109	0A6400806	SCREW PAN (T WASHER) M4X8	
110	XC7692051	BASE PLATE COVER	
111	XC9402151	CARD PCB COVER	
112	XC7756051	PEN HOLDER	
113	XD0731051	LCD MODULE SUPPLY ASSY (U.S.A.)	
	XD0732051	LCD MODULE SUPPLY ASSY (OTHER)	
114	XC9408053	ASSY:TOUCH PANEL D6MID (U.S.A.)	
	XC9408054	ASSY:TOUCH PANEL D6MID (OTHER)	
115	XA6039051	FRONT COVER SPACER B	
116	136681051	TAPTITE, BIND B M3X8	
117	X59629051	TAPTITE,BIND B M3X10	
118	XC9410051	LCD PRESSER MID	
119	XD0504051	LED LAMP UNIT WORK AREA D6	
120	XC7759051	INSULATION SHEET	
121	XD0521051	CARD PCB HOLDER	
122	XD0522051	USB PCB HOLDER	
123	060300516	SCREW BIND M3X5	
124	XC4543051	BOARD PRESSER	
125	XC9930051	FC JACK SUPPLY ASSY	
126	X51271001	NUT	
127	XZ0407051	ADJUST PLATE A	
128	XC8431051	ADJUST PLATE B	
129	XC9508051	USB PCB ASSY D6M	

No.	CODE	NAME	REMARKS
130	XC9412051	FACE PLATE HOLDER	
131	XD0518151	LEAD WIRE ASSY USB D6M_E	
132	137947001	CLIP	

(1) PRINCIPAL PARTS

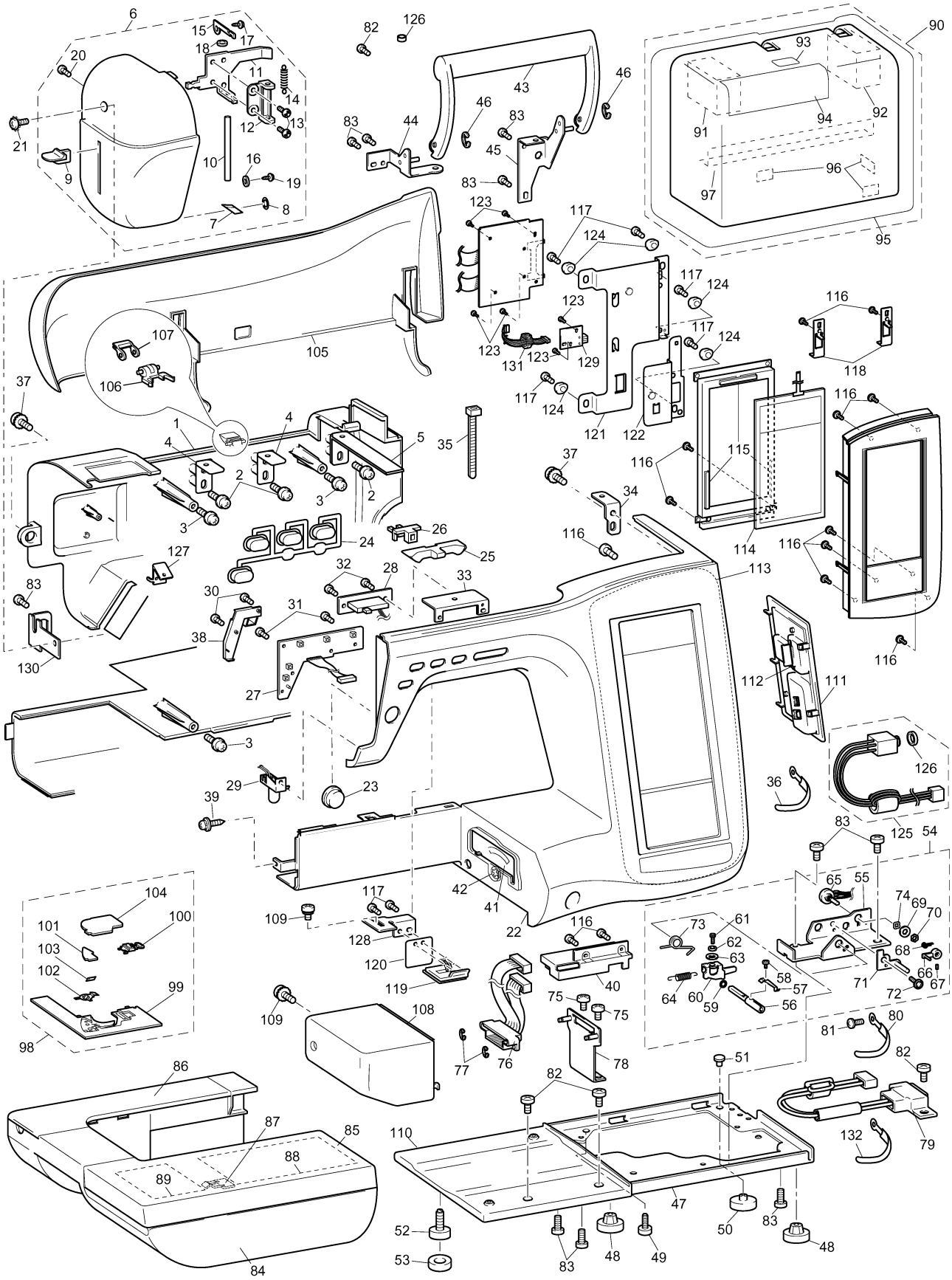

LCD SUPPLY ASSEMBLY

No.	CODE	NAME	REMARKS
1	XD0731051	LCD MODULE SUPPLY ASSY (U.S.A.)	
	XD0732051	LCD MODULE SUPPLY ASSY (OTHER)	
2	XD0734051	LCD HOLDER SUPPLY ASSY	
3	XD0736051	LCD SUPPLY ASSY (U.S.A., CAN)	
	XC9929051	LCD SUPPLY ASSY (OTHER)	
4	XC9408053	ASSY:TOUCH PANEL D6MID (U.S.A.)	
	XC9408054	ASSY:TOUCH PANEL D6MID (OTHER)	
5	136681051	TAPTITE, BIND B M3X8	
6	XC9410051	LCD PRESSER MID	
7	XA6039051	FRONT COVER SPACER B	

LCD SUPPLY ASSEMBLY

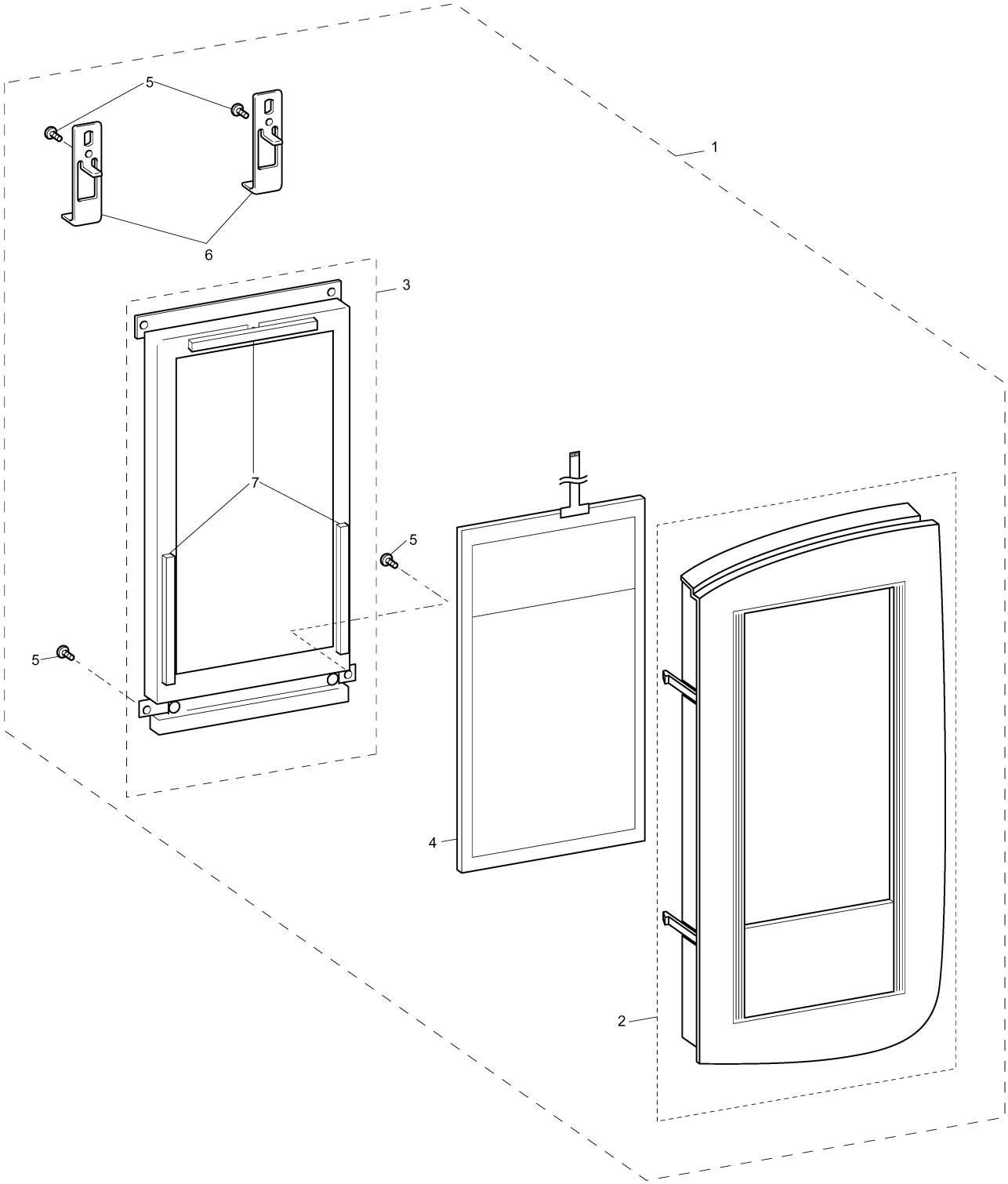

(2) UPPER SHAFT / NEEDLE BAR, PRESSER MECHANISM

No.	CODE	NAME	REMARKS
		UPPER SHAFT MECHANISM	
1	XC9933151	UPPER SHAFT SUPPLY ASSY	
2	048080346	RETAINING RING E8	
3	021300205	NUT 2 M3	
4	014300632	SET SCREW SOCKET (CP) M3X6	
5	XC7775051	FIXED JOINT	
6	012500532	SET SCREW SOCKET (FT) M5X5	
7	X52478051	BUSHING PRESSER	
8	X57908051	TAPTITE,BIND S M4X10	
9	XC7776051	TIMING BELT 440-5GT-6	
10	XC2385051	TENSION PULLEY ASSEMBLY	
11	0A5401005	SCREW PAN (S/P WASHER) M4X10	
12	XC8336051	UPPER SHAFT COVER	
13	060400616	SCREW BIND M4X6	
14	XC8219051	ASSY:NP PCB-D6	
15	136681051	TAPTITE, BIND B M3X8	
16	XC7777051	PCB HOLDER	
17	060400816	SCREW BIND M4X8	
18	014400432	SET SCREW SOCKET (CP) M4X4	
19	XC3183051	FELT	
20	XC7772051	PULLEY	

No.	CODE	NAME	REMARKS
		NEEDLE BAR, PRESSER MECHANISM	
21	XC2505050	PLATE SPRING	
22	060400516	SCREW BIND M4X5	
23	XC2297051	PRESSER PLATE A	
24	XC2298051	PRESSER PLATE B	
25	XC2503051	SHAFT	
26	XZ0380051	SCREW,PAN(WASHER)M3X18	
27	X57908051	TAPTITE,BIND S M4X10	
28	XC2504050	ADJUSTING SCREW	
29	XC8019051	PCB UNIT:LED LAMP-D6L	
30	048050346	RETAINING RING E5	
31	XC9439051	LAMP HOLDER	
32	XZ0149051	TAPTITE,PAN B 4X12	

(2) UPPER SHAFT / NEEDLE BAR, PRESSER MECHANISM

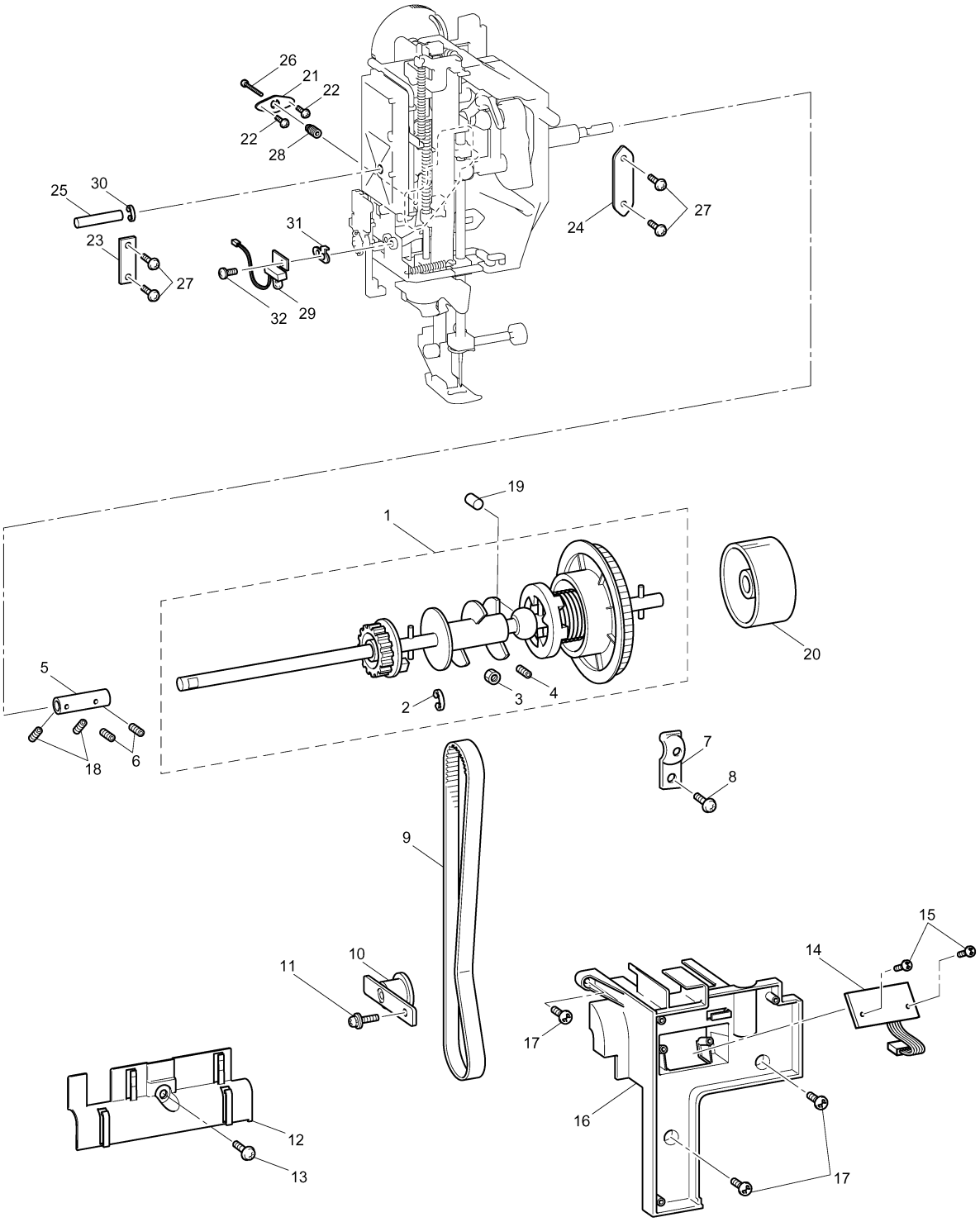

(3) FEED, ROTARY HOOK / SIDE FEED / THREAD CUTTING MECHANISM

No.	CODE	NAME	REMARKS
		FEED, ROTARY HOOK MECHANISM	
1	XC3153151	INNER ROTARY HOOK ASSY	
2	X52800150	BOBBIN	
3	060300416	SCREW BIND M3X4	
4	XC3096051	SCREW M4	
5	XC7876051	LEAD WIRE GUIDE HOLDER	
6	XZ0160051	SHEET	
7	XC7878051	DROP COVER	
8	X53169050	BAND	
		SIDE FEED MECHANISM	
9	X57908051	TAPTITE,BIND S M4X10	
10	XA2189050	RUBBER	
11	XA2401050	WASHER	
12	XA9506051	SIDE FEED GEAR	
13	XA9507050	SIDE FEED WASHER	
14	XA9508051	SPRING,EXTENSION	
15	048030346	RETAINING RING E3	
16	XA9514051	SPRING,PLATE A	
17	060300616	SCREW BIND M3X6	
18	XC0411051	S STOPPER	
19	XC8242051	ASSY:S PULSE MOTOR	
20	XC8243051	ASSY:SPM LEAD WIRE	
21	060300416	SCREW BIND M3X4	
22	XC6258051	SIDE FEED PLATE	
23	XC8418051	SPM HOLDER ASSY	
24	XC6259051	SIDE FEED ARM ASSY	
25	XC6263051	SIDE FEED ADJUST PLATE	
26	XC6264051	SPRING,PLATE B	
27	XA8390051	SCREW	
28	T31049001	COATING CLIP CS-6	

No.	CODE	NAME	REMARKS
		THREAD CUTTING MECHANISM	
29	XC8329151	PHOTO TRANSISTOR ASSY	
30	XC9199051	SENSOR HOLDER	
31	0A4300605	SCREW PAN (S/P WASHER) M3X6	
32	060400516	SCREW BIND M4X5	
33	060300516	SCREW BIND M3X5	
34	X53169050	BAND	

(3) FEED, ROTARY HOOK / SIDE FEED / THREAD CUTTING MECHANISM

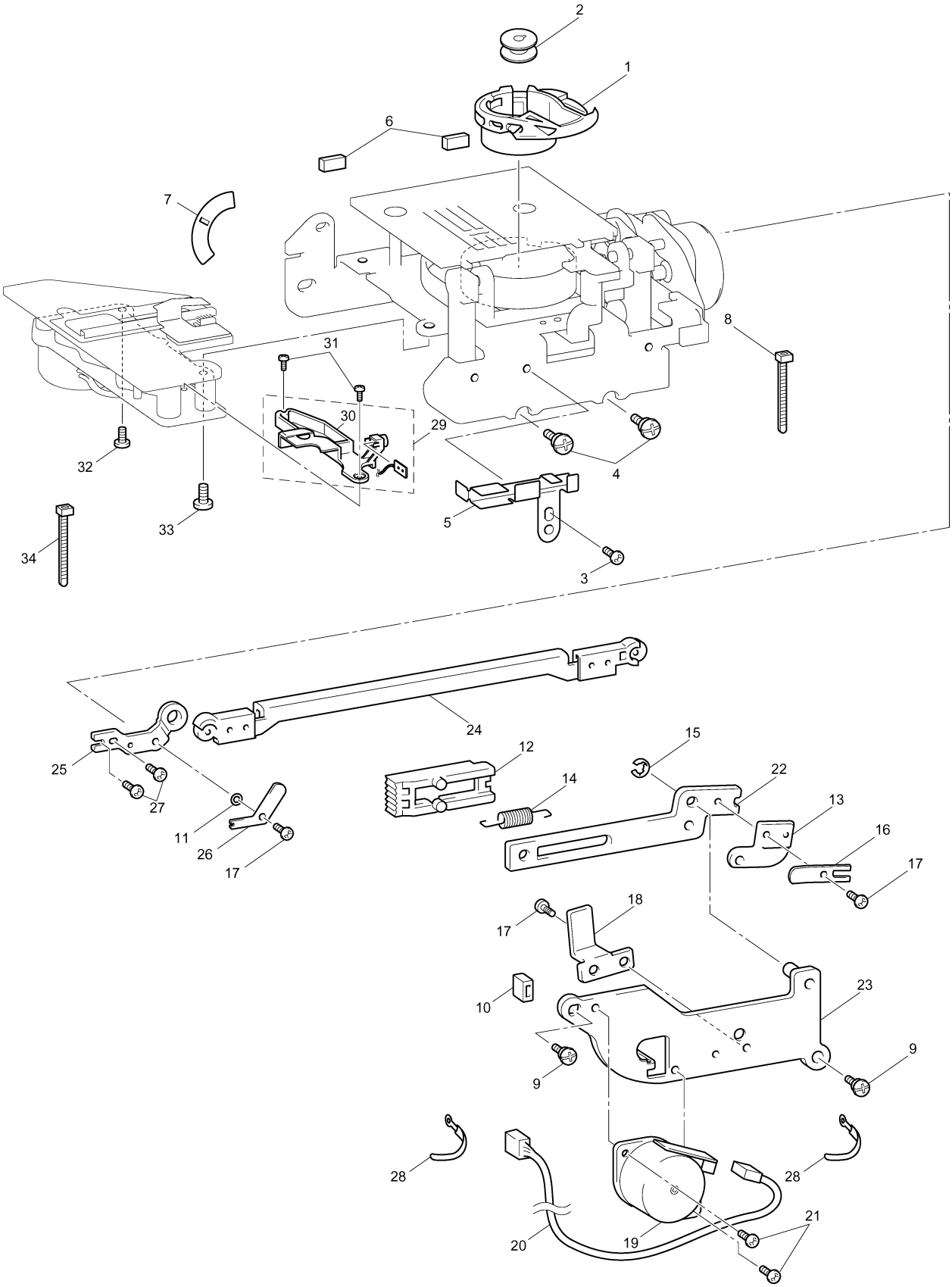

(4) ROTARY HOOK DRIVE / BOBBIN WINDER MECHANISM

No.	CODE	NAME	REMARKS
		ROTARY HOOK DRIVE MECHANISM	
1	XC7890051	LOWER SHAFT A	
2	XC2601051	TIMING PULLEY D	
3	014500532	SET SCREW SOCKET (CP) M5X5	
4	X52664050	LOWER SHAFT BUSHING	
5	X51383050	WASHER,THRUST	
6	048060346	RETAINING RING E6	
7	137768151	SET SCREW COLLAR	
8	014400432	SET SCREW SOCKET (CP) M4X4	
9	XC2602051	JOINT	
10	012500532	SET SCREW SOCKET (FT) M5X5	
11	XC2602051	JOINT	
12	012500532	SET SCREW SOCKET (FT) M5X5	
13	132421051	BUSHING PRESSER	
14	X57908051	TAPTITE,BIND S M4X10	
15	XC2603050	DISK	
16	XC3183051	FELT	

No.	CODE	NAME	REMARKS
		BOBBIN WINDER MECHANISM	
17	XC7696051	UPPER COVER	
18	XC7894051	BOBBIN WINDER HOLDER ASSY	
19	XC7898051	BW MOTOR ASSY	
20	125928050	BOBBIN WINDER SHAFT SPRING	
21	XC7902051	BOBBIN PRESSURE	
22	XC7903051	BOBBIN PRESSURE GUIDE ASSY	
23	137999050	POLYESTER SLIDER	
24	048030346	RETAINING RING E3	
25	XA9545051	SPRING	
26	XC8254051	ASSY:BWSW D6	
27	XC8194051	BW SWITCH HOLDER	
28	XC6055051	SCREW, BIND M3X3	
29	XC8371051	BOBBIN PRESSER COVER	
30	136681051	TAPTITE, BIND B M3X8	
31	137947001	CLIP	
32	XC7905051	TENSION GUIDE ASSY	
33	0A4300805	SCREW PAN (S/P WASHER) M3X8	
34	XC7907051	THREAD GUIDE PLATE	
35	XC7908051	SUB SPOOL STAND PIN	
36	XC7909051	SUB SPOOL PIN HOLDER	
37	XC7910051	NOTCH PLATE	
38	XA9371051	SHAFT	
39	XC6055051	SCREW, BIND M3X3	
40	XA1786053	SPOOL PIN	
41	X55260153	SPOOL PRESSER C	
42	XC7911051	SPOOL PIN HOLDER B ASSY	
43	136681051	TAPTITE, BIND B M3X8	
44	085411015	TAPTITE BIND B M4X10	
45	XC7912051	BOBBIN BASE ASSY	
46	X80321001	NT LOWER THREAD CUTTER	
47	XC7914051	BOBBIN THREAD CUTTER HOLDER	
48	XC8432051	THREAD GUARD PLATE	
49	087310816	TAPTITE CUP B M3X8	
50	060400516	SCREW BIND M4X5	
51	060400616	SCREW BIND M4X6	
	XD0597051	BOBBIN WINDER SUPPLY ASSY	

(4) ROTARY HOOK DRIVE / BOBBIN WINDER MECHANISM

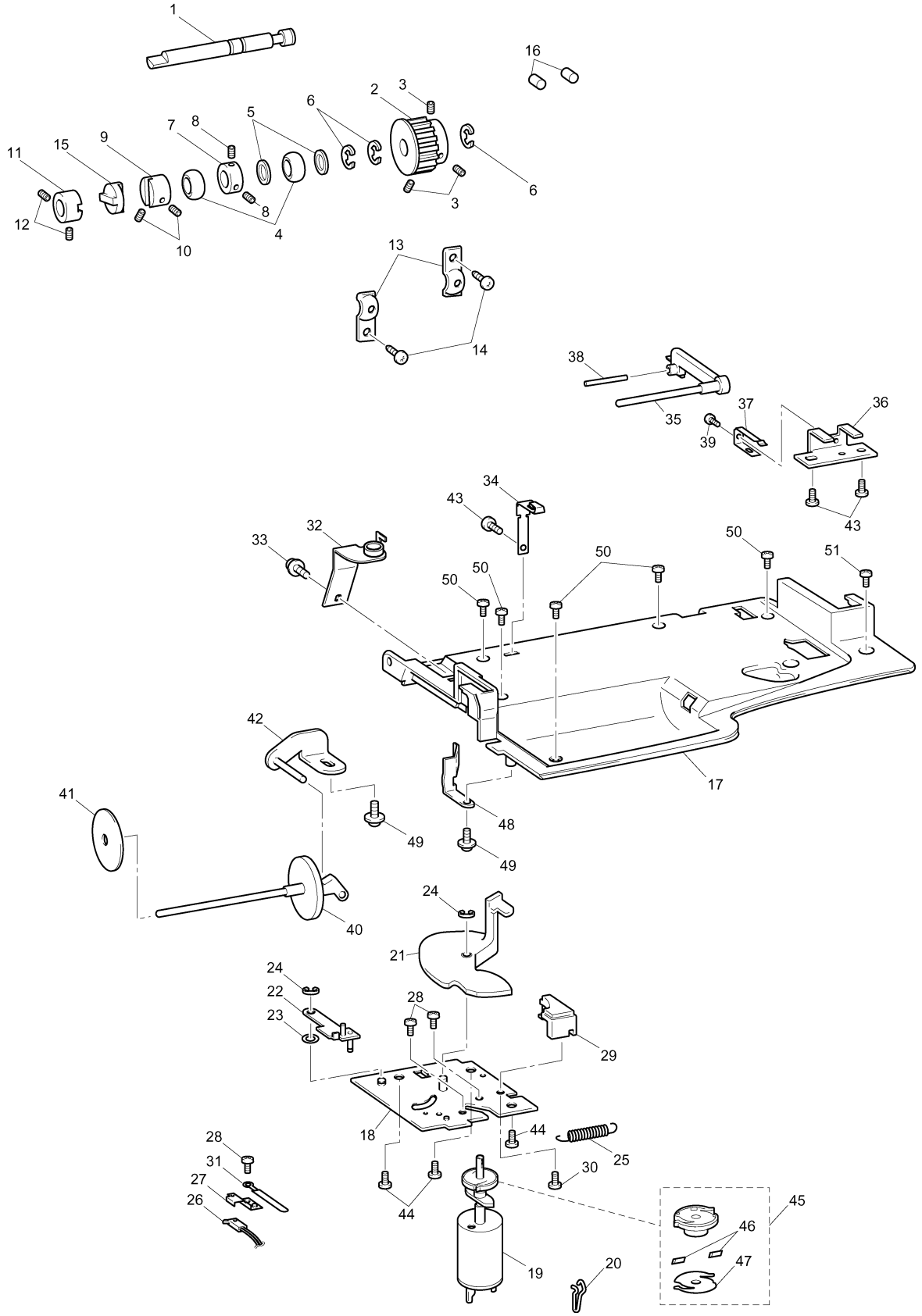

(5) THREAD GUIDE MECHANISM

No.	CODE	NAME	REMARKS
1	XC9442151	THREAD GUARD ASSEMBLY	
2	XA0083051	TENSION DISC A	
3	XC2626051	TENSION DISC B	
4	XC3437051	TENSION ADJUSTING SCREW	
5	XA1388051	TENSION DISC WASHER	
6	XC9444051	DISK WASHER HOLDER	
7	XA9900051	THREAD TENSION SPRING	
8	XD0573051	WASHER	
9	XA9562051	TENSION PLATE ASSY	
10	XC7922050	THREAD TENSION CAM	
11	048030346	RETAINING RING E3	
12	XC7923051	THREAD TENSION GEAR COVER	
13	XA9935050	SPRING TAPE	
14	X57605051	SPRING	
15	048020346	RETAINING RING E2	
16	026030136	WASHER PLAIN S 3	
17	XC9446051	TENSION RELEASE HOLDER ASSY	
18	XA9571051	TENSION RELEASER LINK	
19	048030346	RETAINING RING E3	
20	XC2638051	TENSION PRESSURE ASSY	
21	XC9115051	TENSION PLATE	
22	XC7927051	SPACER	
23	XA9577051	SPRING	
24	XC2640051	TENSION RELEASE CAM	
25	012300432	SET SCREW SOCKET (FT) M3X4	
26	X57363051	POWER LOCK 2X3	
27	X57605051	SPRING	
28	048020346	RETAINING RING E2	
29	XC9450051	LINK A SHAFT PLATE ASSY	
30	XC9453051	THREAD GUIDE SHUTTER LINK A	
31	XC9454051	THREAD GUIDE SHUTTER LINK B	
32	048030346	RETAINING RING E3	
33	XC9456151	THREAD GUIDE SHUTTER	
34	XC2644051	PLATE ASSEMBLY	
35	XC7928051	THREAD GUIDE	
36	XZ0386051	THREAD TAKE UP SPRING	
37	0A4301806	SCREW, PAN (S/P WASHE) M3X18	
38	XC7931050	THREAD GUIDE WIRE	
39	XA9996051	WASHER,PLAIN	
40	XC7564051	SCREW, PAN(S/P WASHER)M3X6	
41	060300416	SCREW BIND M3X4	
42	XC8258051	ASSY:AT PULSE MOTOR	
43	XC9515051	LEAD WIRE ASSY ATPM D6M	
44	XC7933051	ATPM SENSOR PLATE	
45	XC8260051	ASSY:AT INIT PCB	
46	X58316051	THREAD CUTTING SHUTTER	
47	XA9585151	THREAD CATCHING SPRING CASE	
48	XC8262051	ASSY:UPTHREAD PCB	
49	XC7934051	THREAD SENSOR HOLDER	
50	137947001	CLIP	
51	XC9271051	INSULATION SHEET FOR TGPM	
52	085411015	TAPTITE BIND B M4X10	
53	XC9458152	FRONT THREAD GUARD COVER	
54	0A5300606	SCREW PAN (S/P WASHER) M3X6	
55	XC9460151	THREAD GUIDE COVER	
56	XC9463051	THREAD GUIDE COVER	
57	XC9466151	THREAD GUIDE	
58	138433051	TAPTITE,PAN B M3X6	
59	052300606	SCREW, PAN (S/P WASHER) M3X6	
60	X53169050	BAND	

(5) THREAD GUIDE MECHANISM

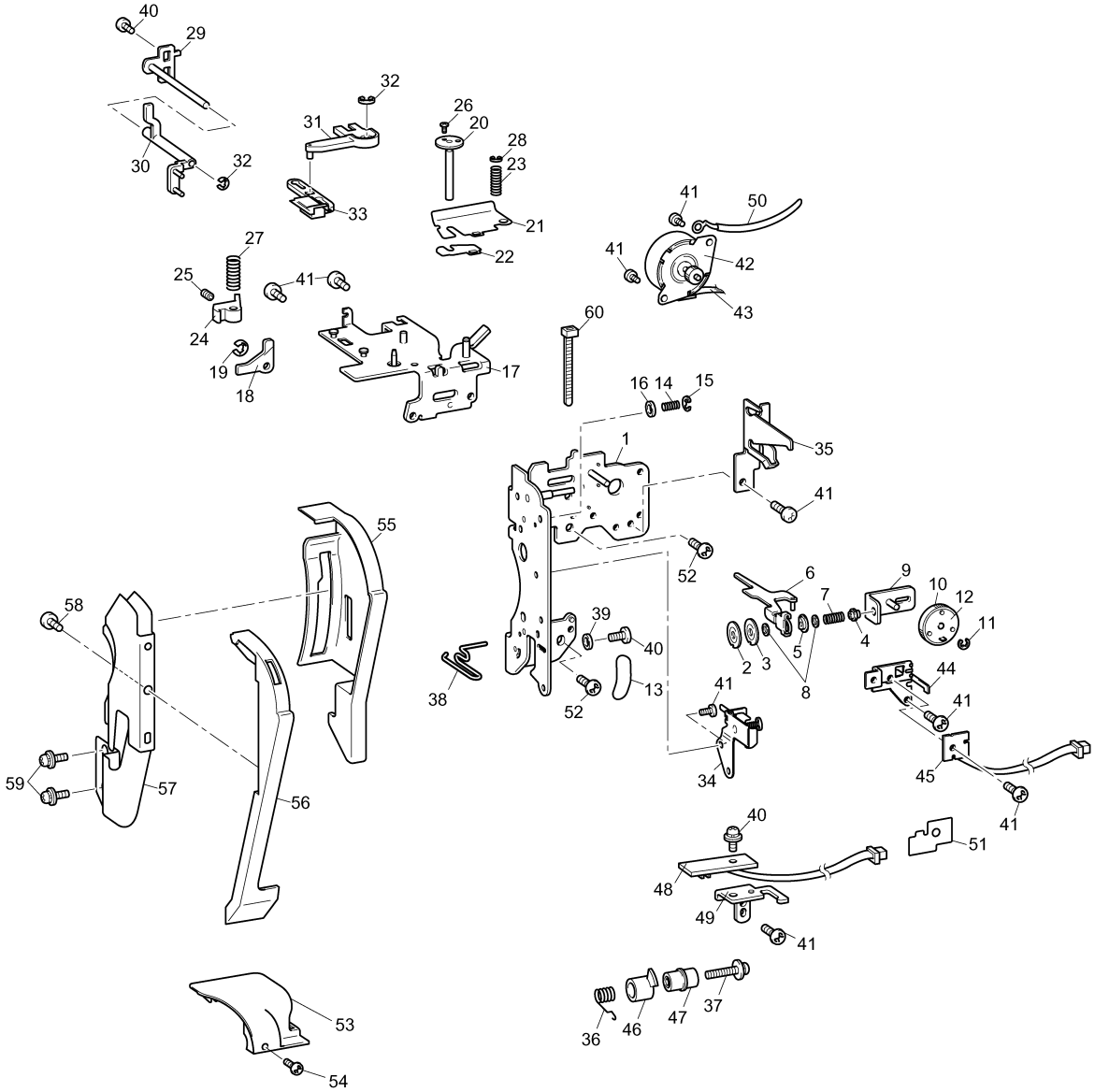

(6) ELECTRONIC PARTS / MOTOR UNIT

No.	CODE	NAME	REMARKS
		ELECTRONIC PARTS	
1	XD0737051	MAIN PCB SUPPLY ASSY	
2	136681051	TAPTITE, BIND B M3X8	
3	060300616	SCREW BIND M3X6	
4	XC9935151	CARD PCB SUPPLY ASSY	
5	XC9531051	INVERTER:ECXF6034M	
6	XC9532051	LEAD WIRE ASSY INVERTER D6M	
7	XC9533051	POWER SUPPLY UNIT 100V D6M (U.S.A., CAN)	
	XD0294051	POWER SUPPLY UNIT 230V D6M (OTHER)	
8	XC7630051	ASSY:POWER SWITCH D6	
9	XZ0389051	INSULATOR SHEET S	
10	XC7568051	SCREW, PAN(S/P WASHER)M4X14	
11	XC8902051	FERRITE CORE:E04SR200935A	
12	137947001	CLIP	
13	X53169050	BAND	
14	XC5069051	SPIRAL TUBE A	
15	T31049001	COATING CLIP CS-6	

No.	CODE	NAME	REMARKS
		MOTOR UNIT	
16	XA9644050	T BELT	
17	XC8294051	ASSY:MAIN MOTOR	
18	XC8027051	MOTOR HOLDER	
19	XA9649050	FENDER RUBBER	
20	XA9650051	MOTOR SPACER PRESSER	
21	XC0443051	SPACER 4X7	
22	052401605	SCREW, PAN (S/P WASHER) M4X16	
23	XC6481051	MOTOR CAP	
24	XC5763051	MOTOR HOLDER SPACER	
25	XA8474051	UPSET 4X12 DB	
26	XA9652150	MOTOR FAN	
27	XC9467051	MAIN PCB FIXED PLATE	
28	XC8816021	FOOT CONTROLLER:FC-322-81-LF (U.S.A., CAN, RUS, SIN, AUS)	
	XD0501021	FOOT CONTROLLER:FC-322-LF-EU (GER, U.K., FRA, SPA, ITA, SWI)	

(6) ELECTRONIC PARTS / MOTOR UNIT

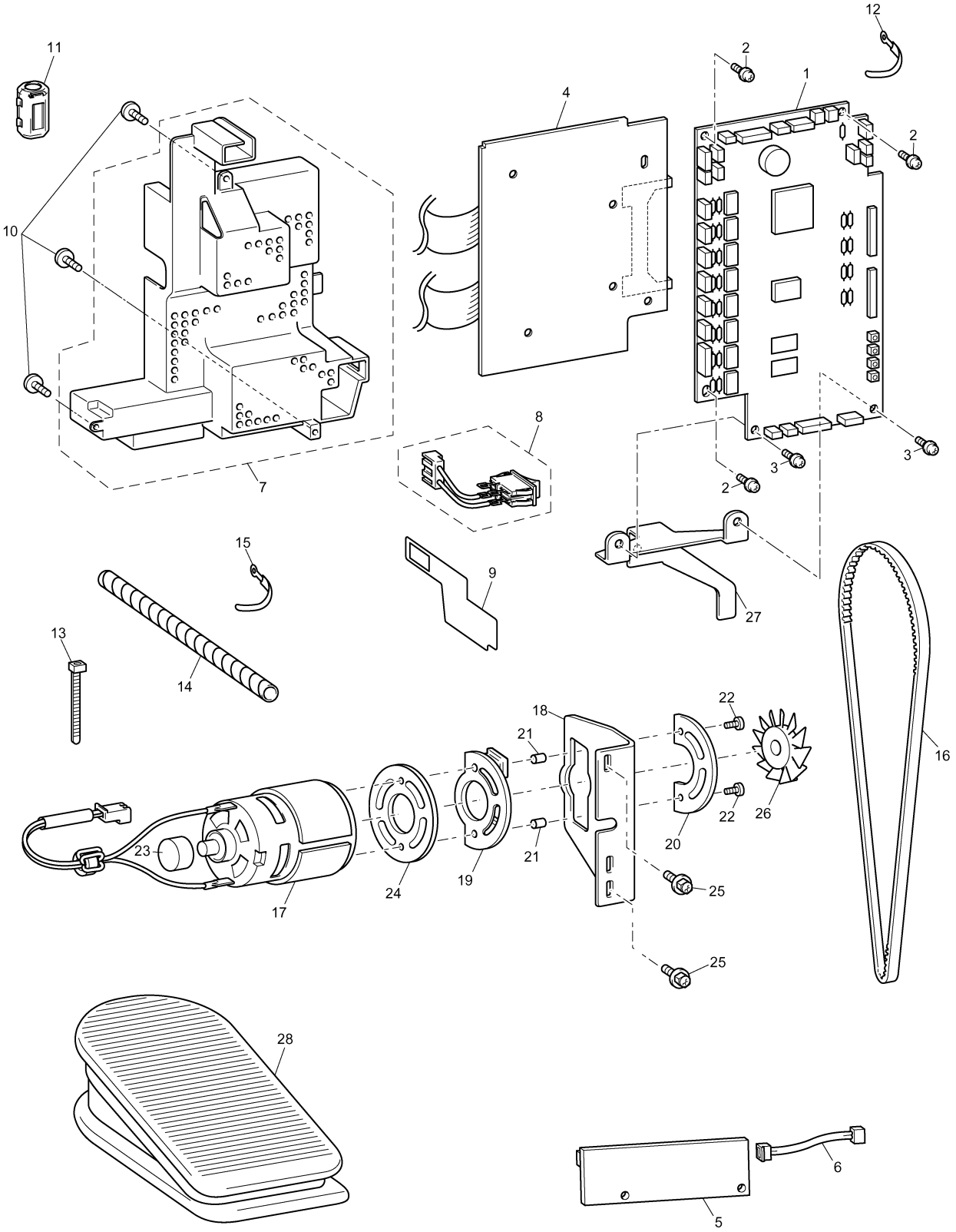

(7) EMBROIDERY UNIT

No.	CODE	NAME	REMARKS
1	XC8035051	MAIN FRAME SUD ASSY	
2	XC8038050	DRIVING PULLEY	
3	XC8039050	DRIVING GEAR	
4	XC8298051	ASSY:XY PULSE MOTOR	
5	XC8299051	ASSY:XPM LEAD WIRE	
6	XA8390051	SCREW	
7	XC8041051	TIMING BELT 40S2M530	
8	XC8042051	TENSION PULLEY ASSY	
9	XC8045050	TENSION PULLEY	
10	XC8046051	X GUIDE PLATE	
11	XC8047050	E CODE SUPPORTER	
12	T31049001	COATING CLIP CS-6	
13	XC7566051	SCREW, PAN(S/P WASHER)M4X8	
14	XC8300051	ASSY:X SENSOR PCB	
15	060300616	SCREW BIND M3X6	
16	X53169050	BAND	
17	XC9539051	EMB RELAY PCB ASSY D6M	
18	XC9473051	X CARRIAGE UNIT	
19	XC8038050	DRIVING PULLEY	
20	XC8039050	DRIVING GEAR	
21	XC8298051	ASSY:XY PULSE MOTOR	
22	XC8306051	ASSY:YPM LEAD WIRE	
23	XA8390051	SCREW	
24	XC9478050	FFC CODE GUIDE	
25	XC8586050	FFC CODE SUPPORTER	
26	060300616	SCREW BIND M3X6	
27	XC8042051	TENSION PULLEY ASSY	
28	XC8045050	TENSION PULLEY	
29	XC9479051	TIMING BELT 40S2M660	
30	XC8061051	Y SLIDER	
31	XC8062051	YT BELT PRESSER PLATE	
32	XC7566051	SCREW, PAN(S/P WASHER)M4X8	
33	XC8065051	Y CARRIAGE ASSY	
34	XC9482051	Y GUIDE SHAFT	
35	XC8070151	E HOOP STAY PLATE SUB ASSY	
36	XC8074051	E HOOP LOCK LEVER	
37	XC8075051	E HOOP LOCK LEVER SPRING	
38	048040346	RETAINING RING E4	
39	XC8307051	ASSY:FRAME PCB	
40	XC8076051	E HOOP PRESSURE PLATE	
41	XC8077051	E HOOP PRESSURE SPRING A	
42	XC8079051	E HOOP PRESSURE SPRING C	
43	060300416	SCREW BIND M3X4	
44	XA8390051	SCREW	

No.	CODE	NAME	REMARKS
45	XC8859051	INSULATOR SHEET	
46	060400616	SCREW BIND M4X6	
47	XC8080051	STOP RING 10.69	
48	XC8081051	WASHER	
49	XC8082050	WASHER,SPRING 12	
50	085301017	TAPTITE BIND P M3X10	
51	XC8084050	FFC SUPPORT	
52	XC8310051	FLEXIBLE FLAT CABLE:SML2CD-6	
53	060300616	SCREW BIND M3X6	
54	XC8085050	CORD CLIP	
55	XC8311051	ASSY:Y SENSOR PCB	
56	XC8086050	CODE GRIP	
57	XC8087051	X SLIDER	
58	XC7566051	SCREW, PAN(S/P WASHER)M4X8	
59	XC8898051	X GUIDE SHAFT PRESSER PLATE	
60	XC8899050	X GUIDE SHAFT PRESSER	
61	060300416	CREW BIND M3X4	
62	XC8088051	X BELT PRESSER	
63	XC7566051	SCREW, PAN(S/P WASHER)M4X8	
64	XC7697051	ES BASE COVER	
65	XC8093051	GROOVE COVER	
66	X59853050	RUBBER CUSHION	
67	XC8094051	RUBBER CUSHION COVER	
68	XC8095051	LOCK FINGER	
69	XC8096051	SPRING	
70	XC8097051	LOCK RELEASE LEVER	
71	XC9486051	DROP TRIGGER	
72	XC9540051	LEAD WIRE ASSY EMB UNIT D6M	
73	085301615	TAPTITE BIND P M3X16	
74	T31049001	COATING CLIP CS-6	
75	085300815	TAPTITE BIND P M3X8	
76	087411416	TAPTITE CUP B M4X14	
77	XC7566051	SCREW, PAN(S/P WASHER)M4X8	
78	XC9487052	ES MAIN COVER ASSY	
79	XC9488052	ES MAIN COVER	
80	XC8093051	GROOVE COVER	
81	XC8112051	XC SUB COVER	
82	XA8390051	SCREW	
83	XC9490052	X CARRIAGE COVER	
84	XC9492051	YPM COVER	
85	085301017	TAPTITE BIND P M3X10	
86	XC8089051	E HOOP STAY COVER	
87	060300416	SCREW BIND M3X4	
88	XC8137051	EMBROIDERY HOOP ASSY 130D6	

(7) EMBROIDERY UNIT

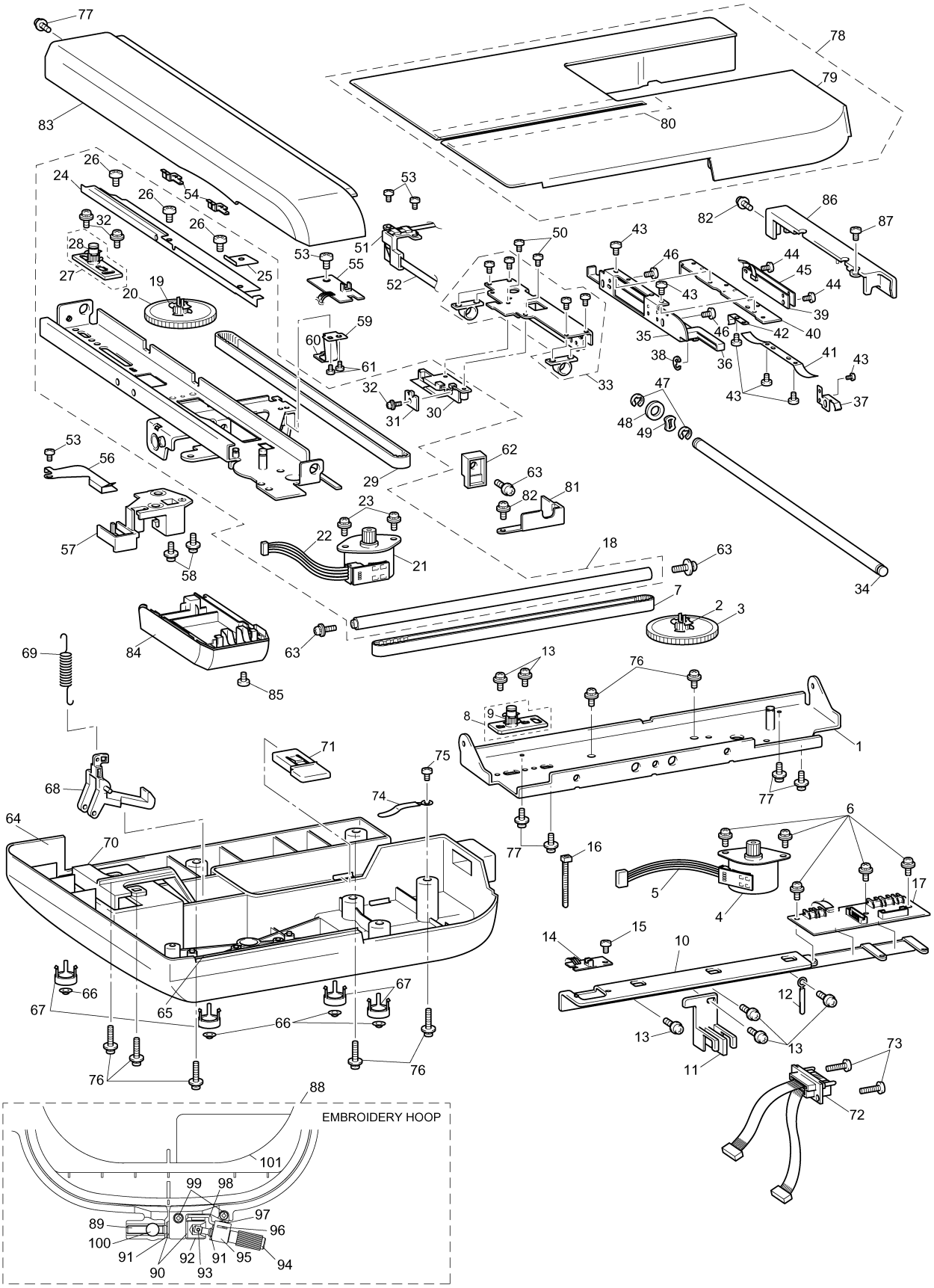

(7) EMBROIDERY UNIT

No.	CODE	NAME	REMARKS
89	XC8118051	THUMB SCREW	
90	026050136	WASHER PLAIN S 5	
91	048040346	RETAINING RING E4	
92	XC8119051	RING	
93	XC8120051	KNOB PIN	
94	XC8121051	KNOB SHAFT	
95	XC8122051	KNOB HOLDER	
96	XC8123051	KNOB FIXED PLATE	
97	060260316	SCREW BIND M2.6X3	
98	XC8124051	HOLDER ASSY	
99	0A4260806	SCREW PAN (S/P WASHER) M2.6X8	
100	XC8129051	OUTER HOOP NUT	
101	XC8359051	EMBROIDERY SHEET 130D6 ASSY	
	XC8151051	CARRIAGE PAD A D	
	X60439151	BAG,630X630T	
	XC9625151	ES OVER UNIT POLYSTYRENE	
	XC9626151	ES UNDER UNIT POLYSTYRENE	
	XC9627151	EMBROIDERY CARTON D	
	XC9628051	HANDLE	
	XC8890050	HANDLE PLATE	
	XC9468161	EMBROIDERY UNIT ASSEMBLY (SUPPLY ASSY)	

(7) EMBROIDERY UNIT

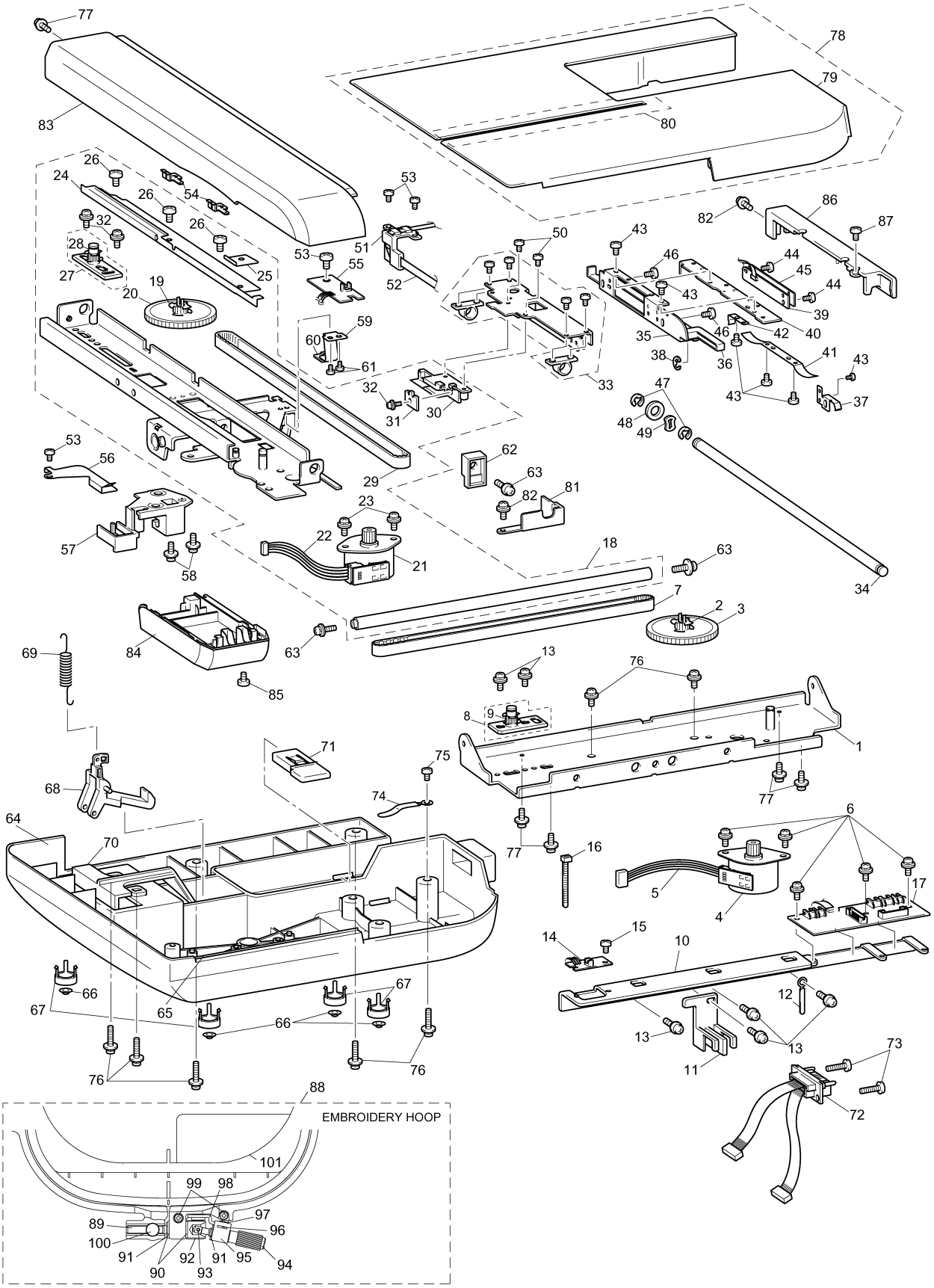

(8) ATTACHMENTS / PACKING MATERIALS / PRINTED MATTER

No.	CODE	NAME	REMARKS
		ATTACHMENTS	
1	XC4487051	ACCESSORY BAG	
2	X57789151	BH PRESSER FOOT	
3	X54243051	SEAM RIPPER	
4	X58358051	Z NEEDLE ASSY	
5	XC1807121	SCISSORS	
6	X52800150	BOBBIN	
7	X59476051	CLEANING BRUSH	
8	XC3098051	OVERCASTING STITCH FOOT ASSY	
9	130012054	SPOOL PRESSER A	
10	X56409051	BLIND STITCH FOOT ASSY	
11	X59370051	ZIPPER FOOT	
12	130013154	SPOOL PRESSER B	
13	X55467051	SCREW DRIVER	
14	135793001	PUNCH	
15	X53840351	TRANSPARENCY PRESSER FOOT	
16	XA4322001	QUILTING FOOT	
17	X59816103	WALKING FOOT ASSEMBLY	
18	XC3198001	SIDE CUTTER ASSY	
19	XA6941052	KNEE LIFTER LEVER ASSY	
20	130489001	BUTTONING FOOT	
21	X55260153	SPOOL PRESSER C	
22	XC8619051	EXTRA SPOOL PIN	
23	X57045051	SPOOL FELT	
24	XC4489051	ACCESSORY TRAY	
25	XA0188050	BAG	
26	XC8167251	INNER ROTARY HOOK ASSY	050212
27	XC6909050	PE BAG 90X100	
28	XD0313051	U PRESSER FOOT	
29	XC1074051	NEEDLE PLATE FIXING METAL	
30	XA9940051	TOUCH PEN	
31	184944001	CHALK PEN	
32	XD0745051	USB I/F CORE CABLE	
33	XA9939051	NEEDLE PLATE COVER	
34	X59296151	TWIN NEEDLE (1PC)	
35	XC9399051	BOBBIN HOLDER	
36	XA5523050	NET	
37	XC6052051	POWER SUPPLY CORD:UL CSA-LF (U.S.A, CAN, CHILE)	
	XA0070151	POWER SUPPLY CORD (OTHER)	
	X59354151	POWER SUPPLY CORD –BS (U.K.)	
	XC9548051	POWER SUPPLY CORD:SAA-LF (AUS)	
38	XC8661151	BOBBIN GUIDE SET (U.S.A.)	
	XD0897051	BOBBIN GUIDE SET (CAN)	

No.	CODE	NAME	REMARKS
39	XZ0126051	BAG,140X150C	
40	X55468051	SCREW DRIVER S	
		PRINTED MATTER	
41	XD0550051	INSTRUCTION BOOK ENG	
	XD0551051	INSTRUCTION BOOK FRA	
	XD0552051	INSTRUCTION BOOK GER	
	XD0553051	INSTRUCTION BOOK DUT	
	XD0554051	INSTRUCTION BOOK SPA	
	XD0555051	INSTRUCTION BOOK ITA	
	XD0823051	INSTRUCTION BOOK RUS	
42	XD0537051	INSTRUCTION BOOK:DISNEY (NV1500D)	
43	XD0556051	QUICK REFERENCE GUIDE	
44	XC8945051	WARRANTY CARD T (U.S.A.)	
	UH3851001	WARRANTY CARD EUR (GER, U.K., FRA, ITA, SWI)	
	XC6402051	WARRANTY CARD UK (U.K.)	
	XA6351151	WARRANTY CARD (ITA)	
45	XC7460051	ACCESSORY LEAFLET	
46	XD0231051	G.LEAFLET 13 (U.S.A., CAN)	
	X81264051	G.LEAFLET NO.24 (OTHER)	
	XD0576051	EMBROIDERY THREAD CATALOG (U.S.A., CAN)	
	XC1625051	BOUTIQUE INSERTION (U.S.A., CAN)	
	181401172	INSERTION WARRANTY COUPON (CAN)	
	XD0256021	INSERTION WEEE (GER, U.K., FRA, SPA, ITA, SWI)	
	XD0794051	SHEET OF LANGUAGE SETTING D6M (Except U.S.A., SIN, AUS)	
	XC9583151	ACC LEAFLET INSERTION D6MID	050220
		PACKING MATERIALS	
47	XC8175050	CARTON	
48	XC8176350	POLYSTYRENE FOAM PAD ASSY,BODY	
49	XC8179150	POLYSTYRENE FOAM PAD ASSY,CASE	
50	XC8535051	BAG,800X600T	
51	XD0558051	CARTON	
52	XZ0409050	PAD D	
53	XC9562250	OVER CARTON POLYSTYRENE B	
54	XZ0400150	SIDE PAD D	
55	XZ0402050	SHEET,150X530	
56	XZ0393050	PAD D MIDDLE	
57	XC8617050	CORD PAD D	
58	XC4762150	THREADER SUPPORT SF	
59	XC9671350	POLYSTYRENE FOAM PAD,ES	

(8) ATTACHMENTS / PACKING MATERIALS / PRINTED MATTER

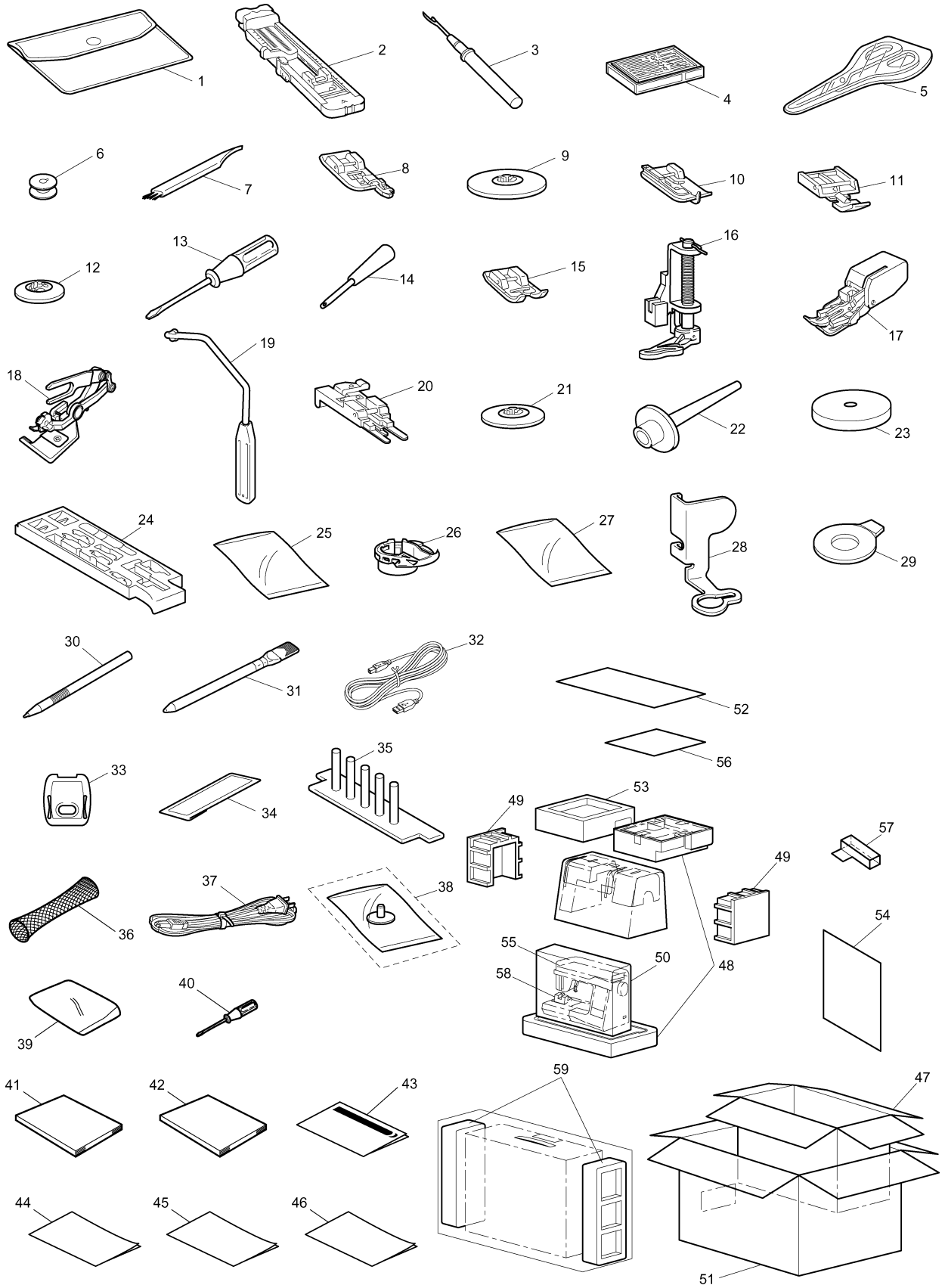

NEEDLE-PRESSER MODULE

No.	CODE	NAME	REMARKS
1	XC8275051	UPPER SHAFT HOLDER ASSY	
2	XC7568051	SCREW, PAN(S/P WASHER)M4X14	
3	XC2398020	SHAFT BUSHING A	
4	XC2399021	PRESSER BAR BUSHING	
5	136681051	TAPTITE, BIND B M3X8	
6	XC5362050	PLATE SPRING	
7	XC7784051	THREAD TAKE-UP COUNTER WEIGHT	
8	012500532	SET SCREW SOCKET (FT) M5X5	
9	XC7785051	UNIT SHAFT	
10	131976050	WASHER,THRUST	
11	048080346	RETAINING RING E8	
12	XC9415051	NEEDLE BAR SUPPORTER ASSY	
13	XC9422051	HOOK RELEASE PLATE	
14	060260516	SCREW BIND M2.6X5	
15	XC3446051	RELEASE LEVER	
16	XC3447051	RELEASE LEVER SHAFT	
17	XC3448051	RELEASE LEVER SPRING	
18	137977051	POLYESTER SLIDER	
19	0A2300606	SCREW PAN (P WASHER) M3X6	
20	XC2417021	SPRING	
21	XA5838051	THREADER HOOK ASSY	
22	XA3565021	LINK A ASSY	
23	XA3569021	LINK B	
24	XC9613051	THREAD GUIDE ASSY	
25	XC2419021	SHAFT	
26	000020415	SCREW BIND M2X4	
27	XC2420050	SHAFT	
28	XC2421121	PLATE	
29	060300516	SCREW BIND M3X5	
30	XC7799051	NEEDLE BAR	
31	XC2424021	NEEDLE BAR THREAD GUIDE	
32	X53053052	SCREW SM2.38	
33	XC2426020	NEEDLE THREAD PLATE	
34	XC2427051	NEEDLE BLOCK	
35	XZ0388051	NEEDLE CLAMP SCREW	
36	014401232	SET SCREW SOCKET (CP) M4X12	
37	X56851051	LOCK NUT	
38	XC2429021	SPRING	
39	XC6300151	NEEDLE BAR CRANK ROD ASSY	
40	132051052	SCREW, FLAT SM3.57-40X7 L	
41	012500532	SET SCREW SOCKET (FT) M5X5	
42	XC2434021	NEEDLE THREAD BLOCK	
43	012400432	SET SCREW SOCKET (FT) M4X4	
44	XC2435020	ZIGZAG ADJUSTING NUT	

No.	CODE	NAME	REMARKS
45	018301032	BOLT SOCKET M3X10	
46	XC2748021	SPRING-Z	
47	XC7802051	NEEDLE HOLDER BROCK	
48	XC2437021	SHAFT ASSY	
49	XC8374051	SHAFT	
50	014300532	SET SCREW SOCKET (CP) M3X5	
51	XC2441021	SPRING	
52	XC6239051	THREAD TAKE-UP LEVER ASSY	
53	XC2443020	THREAD TAKE-UP LEVER LINK	
54	XC7806051	PRESSER BAR	
55	048050346	RETAINING RING E5	
56	XC7807051	PRESSER BAR CLAMP ASSY	
57	014501032	SET SCREW SOCKET (CP) M5X10	
58	XC7810051	SPRING	
59	XC7811050	PRESSER FOOT RACK	
60	XC3015051	PRESSER FEED HOLDER ASSY	
61	XA4813051	SCREW	
62	XC3021051	Z FOOT	
63	XC7812051	PRESSER FOOT LIFTER	
64	XC2452021	PRESSER LIFT SHAFT	
65	XC7813051	SPRING	
66	048040346	RETAINING RING E4	
67	XC2453051	LEVER GUIDE SHAFT	
68	XC9427051	LEVER A ASSY	
69	XC9430051	LEVER B	
70	XC9618051	CAP	
71	XC9431051	TORSION SPRING	
72	048025346	RETAINING RING E2.5	
73	XC2461021	SPRING	
74	XC7817051	LEVER SUPPORTER PLATE	
75	138433051	TAPTITE,PAN B M3X6	
76	XC7787051	BH SWITCH ASSY	
77	XZ0149051	TAPTITE,PAN B 4X12	
78	XC7818150	Z ZIGZAG CAM	
79	XC7819051	Z ZIGZAG LEVER ASSY	
80	XC2480020	Z LEVER CUP	
81	XC9547051	LEAD WIRE ASSY ZPM D6M	
82	X59629051	TAPTITE,BIND B M3X10	
83	XC2483020	T CAM	
84	XC7822051	TENSION RELEASE ROD ASSY	
85	XC5985051	THREAD RELEASE LEVER ASSY D6	
86	XC9432051	ADJUSTING PLATE ASSY	
87	XC9434051	SWITCH LEVER	
88	XC9435051	SPRING	

NEEDLE-PRESSER MODULE

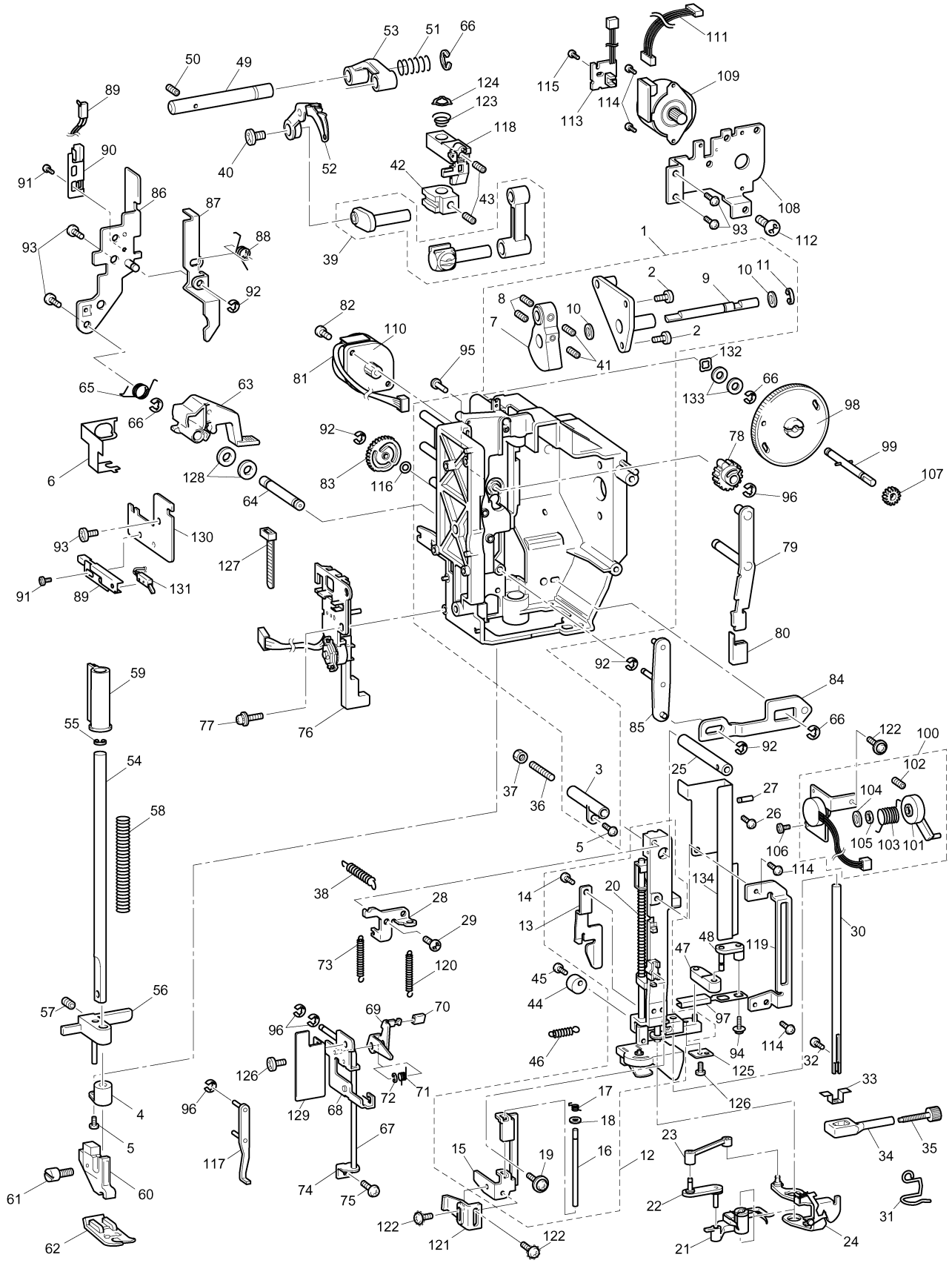

NEEDLE-PRESSER MODULE

No.	CODE	NAME	REMARKS
89	XC2641051	PRESSER SWITCH HOLDER	
90	XC9514051	PF SWITCH ASSY D6M	
91	060300416	SCREW BIND M3X4	
92	048030346	RETAINING RING E3	
93	085411015	TAPTITE BIND B M4X10	
94	XC3037051	SCREW3X10	
95	XC2475051	SHAFT	
96	048020346	RETAINING RING E2	
97	XC9436051	THREAD GUIDE PLATE	
98	XC7827051	PRESSER DIAL	
99	XC8372051	PRESSER DIAL SHAFT ASSY	
100	XC7828051	PT HOLDER ASSEMBLY	
101	XA6493051	PT LEVER	
102	012300632	SET SCREW SOCKET (FT) M3X6	
103	XA1894051	SPRING	
104	026060235	WASHER PLAIN M 6	
105	X52569001	NUT	
106	136681051	TAPTITE, BIND B M3X8	
107	XC7830050	PRESSER DIAL GEAR	
108	XC7831151	PRESSER PM HOLDER	
109	XC8228051	ASSY:PF PULSE MOTOR	
110	XC8678051	ZPM INSULATION ASSY	
111	XC9512051	LEAD WIRE ASSY PFPM D6M	
112	060400616	SCREW BIND M4X6	
113	XC8230051	ASSY:ATPF INIT PCB	
114	060300616	SCREW BIND M3X6	
115	XC7644051	SCREW, PAM (S/P WASHER) M3X5	
116	XZ0155051	POLYESTER SLIDER	
117	XC6241151	RELEASE PLATE ASSY	
118	XC6245051	NEEDLE BAR HOOK STAND ASSY	
119	XC6251051	RELEASE GUIDE PLATE	
120	XC6252051	SPRING	
121	XC6253050	RELEASE ADJUSTER	
122	XC4433051	SCREW,PAN(T WASHER)M3X6	
123	XC6254051	NEEDLE BAR PRESSER SPRING	
124	XC6255050	WASHER,THRUST	
125	XC7832051	ADJUST PLATE	
126	060260516	SCREW BIND M2.6X5	
127	X53169050	BAND	
128	XA1860150	WASHER	
129	XC9437051	NEEDLE THREADER SWITCH LEVER	
130	XC9438051	SWITCH BASE PLATE	
131	XC9513051	THREADER LEVER SWITCH ASSY	
132	103810052	WASHER, WAVE SPRING	

No.	CODE	NAME	REMARKS
133	XA0362051	WASHER	
134	XD0604050	SPRING GUARD	
	XC9931151	NEEDLE UNIT SUPPLY ASSY (OTHER)	
	XC9931152	NEEDLE UNIT SUPPLY ASSY (U.S.A., CAN)	

NEEDLE-PRESSER MODULE

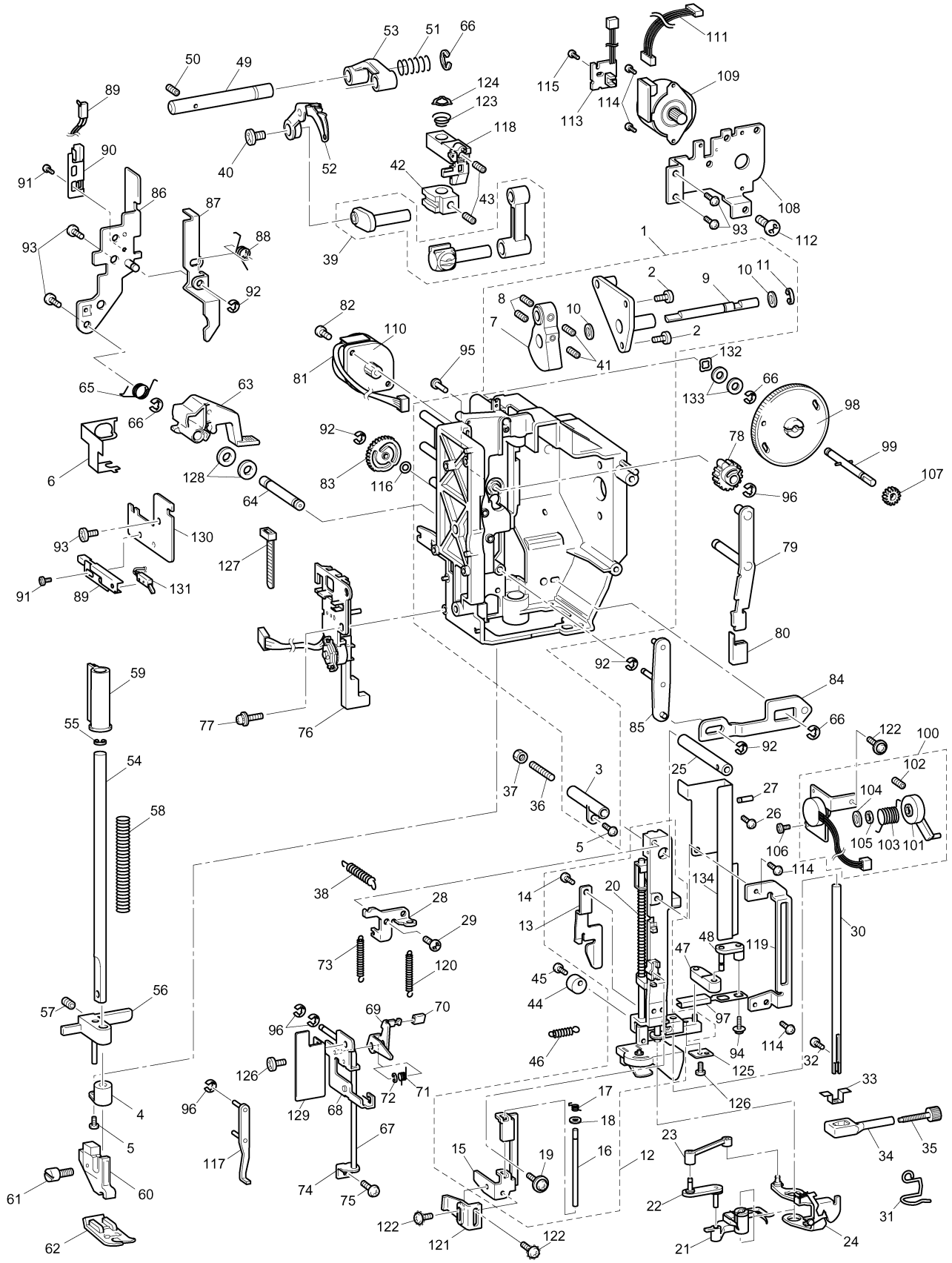

FEED MODULE

No.	CODE	NAME	REMARKS
1	XC7638051	BASE PLATE	
2	XC7837051	F GEAR STOPPER PLATE	
3	060400416	SCREW, BIND M4X4	
4	XC7841151	FEED BAR ASSY	
5	XC7842151	FEED BAR	
6	XC8530051	FEED DOG BASE ASSY	
7	XC7846151	FEED DOG	
8	060300616	SCREW BIND M3X6	
9	XC7847051	FEED DOG CORRECTION PLATE	
10	XC3338021	SCREW3X8	
11	XC7848051	FEED DOG BASE SHAFT A	
12	137999050	POLYESTER SLIDER	
13	014400432	SET SCREW SOCKET (CP) M4X4	
14	XC7849051	FEED DOG BASE SHAFT B	
15	012400432	SET SCREW SOCKET (FT) M4X4	
16	XC2512051	FEED BAR SHAFT A	
17	XC8337021	FEED ARM A	
18	XC2517021	FEED ARM B ASSY	
19	XC2521021	FEED SUPPORTING PLATE ASSY	
20	048020346	RETAINING RING E2	
21	048030346	RETAINING RING E3	
22	137999050	POLYESTER SLIDER	
23	XC9277051	SPRING	
24	XC7835051	HORIZONTAL FEED SHAFT	
25	XC8195051	SHAFT STOPPER PLATE	
26	048050346	RETAINING RING E5	
27	X50546050	WASHER,THRUST	
28	130676151	SET SCREW COLLAR	
29	XC2527021	FEED ADJUSTER	
30	XC2529020	F GEAR	
31	XC2530021	SPRING	
32	137713050	POLYESTER SLIDER	
33	XC2531021	SPRING	
34	XZ0397051	FPM HOLDER ASSY	
35	XC9759051	FPM INSULATION ASSY	
36	XC8236051	ASSY:FPM LEAD WIRE	
37	XC2587050	RUBBER	
38	060300516	SCREW BIND M3X5	
39	XC3338021	SCREW3X8	
40	018402532	BOLT SOCKET M4X25	
41	XC2537021	SPRING	
42	XC2538021	SPRING	
43	XC2539021	BUSHING SUPPORTER ASSY	
44	060400616	SCREW BIND M4X6	
45	XC2542021	BUSHING PRESSER B	
46	060300516	SCREW BIND M3X5	
47	012401032	SET SCREW SOCKET (FT) M4X10	
48	XC7853150	CAP	
49	XC7854051	VERTICAL ROD	
50	X56851051	LOCK NUT	
51	XZ0385051	SPRING	
52	XC8361051	VERTICAL FEED SHAFT	
53	XC7856051	SPRING	
54	XC7857050	FEED DOG CORRECTION LEVER	
55	XC7858050	VERTICAL LEVER	
56	XC2552051	SET SCREW COLLAR	
57	014400432	SET SCREW SOCKET (CP) M4X4	
58	048030346	RETAINING RING E3	
59	XC7859051	VERTICAL SUPPORTING PLATE	
60	137713050	POLYESTER SLIDER	
61	XC2210051	OUTER ROTALY HOOK ASSY	
62	XC2230051	OUTER ROTARY HOOK SHAFT	
63	137805052	SPACER	
64	137976051	WASHER 6	
65	014400632	SET SCREW SOCKET (CP) M4X6	
66	XC8406251	INNER ROTARY HOOK BRACKET ASSY	
67	XC8350051	PHOTO DIODE HOLDER ASSY	
68	XC8240051	ASSY:PLTSW D6	
69	XC7865050	NEEDLE PLATE SW HOLDER	
70	XC7866251	CORD HOLDER	
71	060260316	SCREW BIND M2.6X3	
72	000020415	SCREW BIND M2X4	
73	XZ0181021	STOPPER PLATE BLOCK ASSY	
74	060400516	SCREW BIND M4X5	
75	060300816	SCREW BIND M3X8	
76	XC7867051	LOWER SHAFT B ASSY	
77	X52664050	LOWER SHAFT BUSHING	
78	X51383050	WASHER,THRUST	
79	048060346	RETAINING RING E6	
80	137768151	SET SCREW COLLAR	
81	014400432	SET SCREW SOCKET (CP) M4X4	
82	XC2566021	BUSHING SUPPORTER A	
83	XC2567021	BUSHING PRESSER A	
84	060401616	SCREW BIND M4X16	
85	XC7872151	NEEDLE PLATE A	
86	XC2570021	STOPPER PLATE	
87	XC7873051	STOPPER PLATE	
88	060260316	SCREW BIND M2.6X3	

FEED MODULE

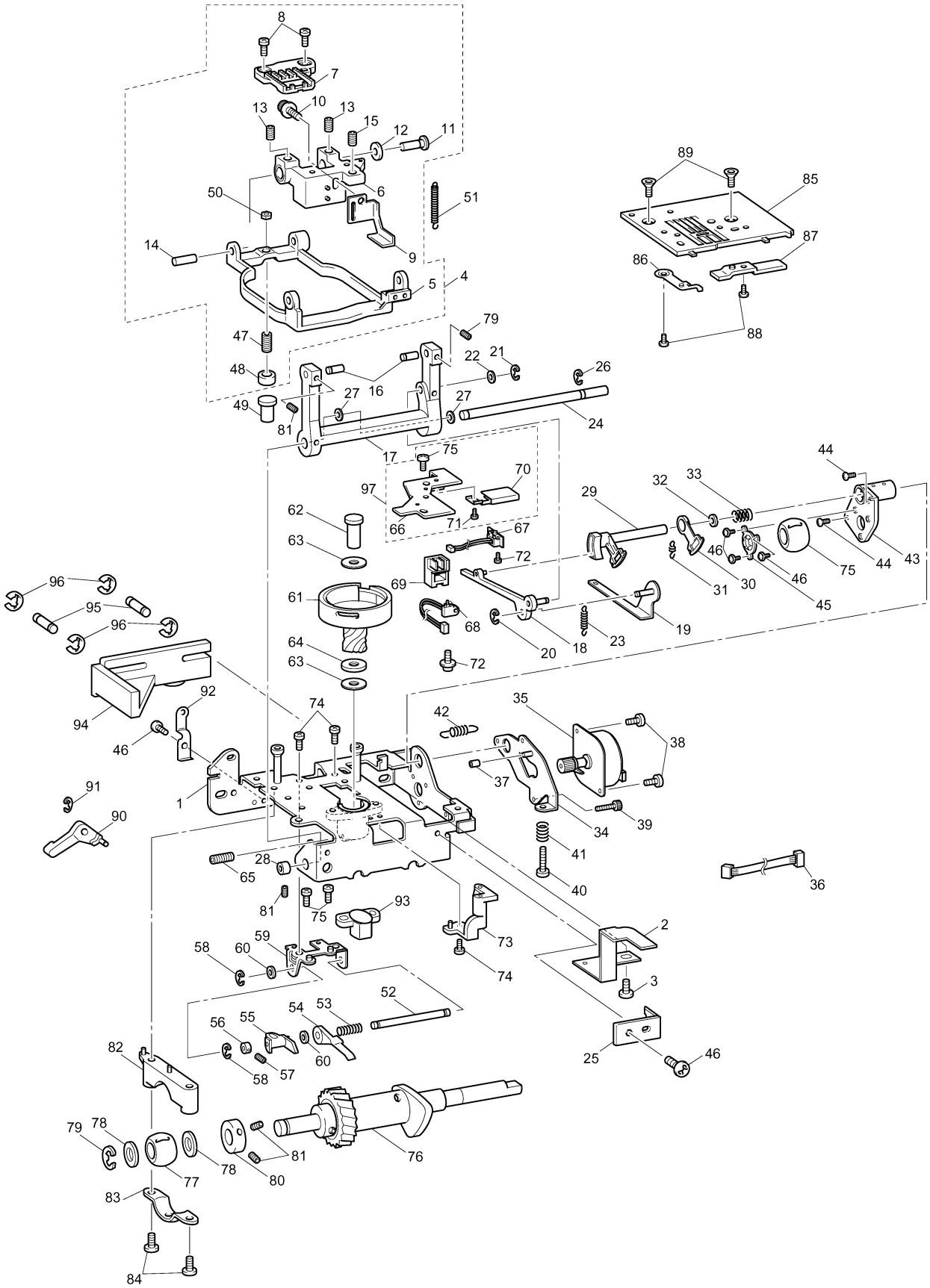
8
7
10
13
13
15
12
11
6
50
51
14
9
5
4
89
85
87
86
88
79
47
22
21
26
48
16
27
27
49
81
24
17
75
70
97
44
32
33
29
62
66
71
67
63
72
46
75
44
43
96
69
31
30
46
45
95
61
68
19
96
20
18
23
64
63
72
92
74
35
42
94
38
46
37
91
1
34
39
90
41
28
65
40
36
81
75
93
2
59
73
58
60
74
3
52
54
53
56
55
60
25
46
82
58
57
79
78
81
76
78
77
80
83
84

FEED MODULE

No.	CODE	NAME	REMARKS
89	X50487051	SCREW M4	
90	XC7874050	DROP KNOB	
91	048030346	RETAINING RING E3	
92	XC7875051	SPRING PLATE	
93	XC7862051	VERTICAL FEED BUSH	
94	XC7877051	DROP LEVER	
95	XC3587021	SLIDE SHAFT A	
96	048020346	RETAINING RING E2	
97	XC9987051	I R HOOK BRACKET SUPPLY ASSY	
	XC8673051	FEED SUPPLY UNIT ASSY (OTHER)	
	XC8673052	FEED SUPPLY UNIT ASSY (U.S.A., CAN)	

FEED MODULE

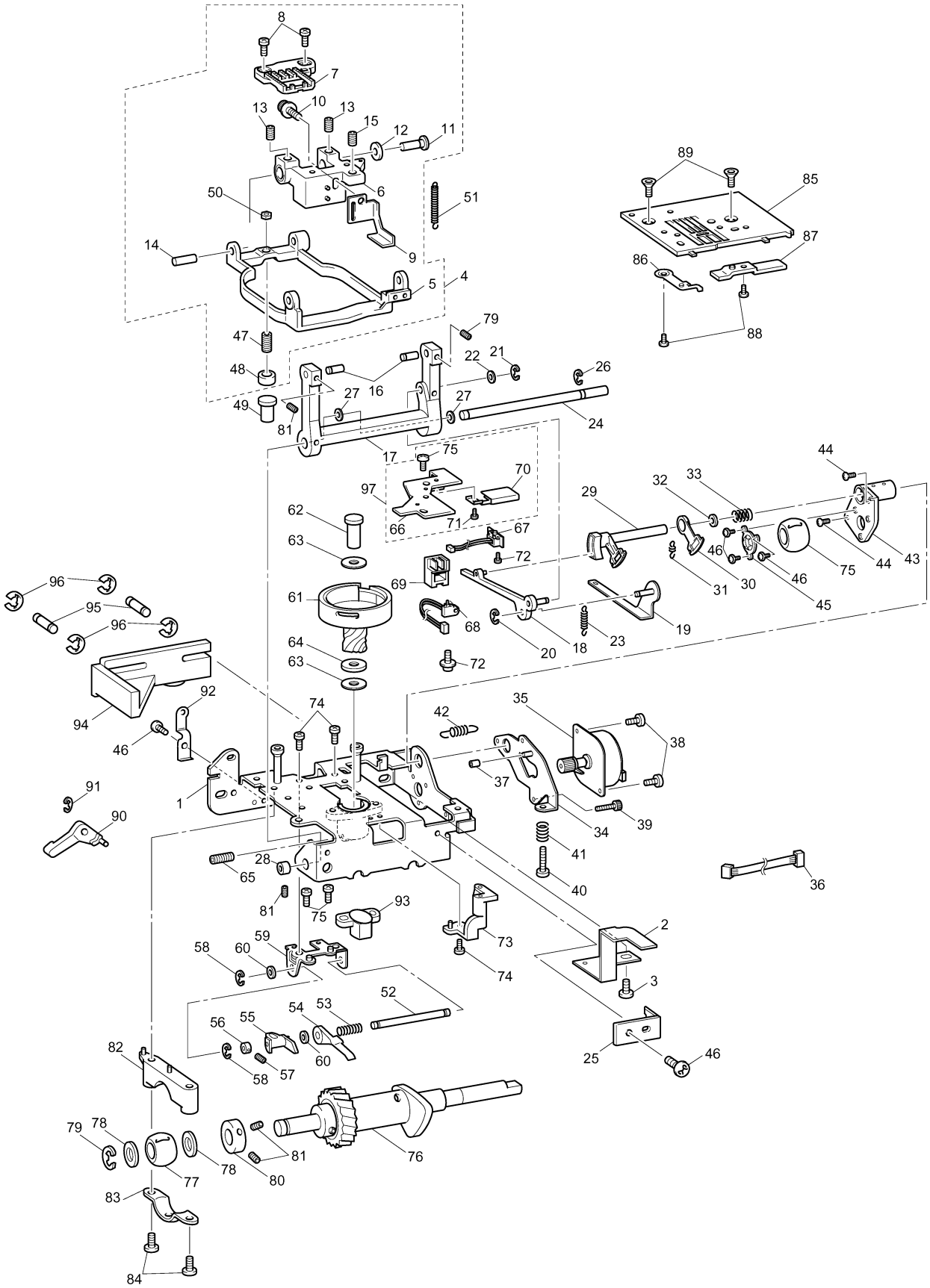

8
7
10
13
13
15
12
11
6
50
51
14
9
5
4
89
85
87
86
88
79
47
22
21
26
48
16
27
27
49
81
24
17
75
70
97
44
32
33
29
62
66
71
67
63
72
46
75
44
43
96
69
31
30
46
45
95
61
68
19
96
20
18
23
64
63
72
92
74
42
35
94
38
46
37
91
1
34
39
90
41
28
65
40
36
81
75
93
2
59
73
58
60
74
3
52
54
53
56
55
60
82
58
57
25
46
79
78
81
76
78
77
80
83
84

THREAD CUTTER MODULE

No.	CODE	NAME	REMARKS
1	XC2576021	THREAD CUTTER FRAME ASSY	
2	XC2579020	SPACER	
3	X80321001	NT LOWER THREAD CUTTER	
4	XC2595121	PRESSER PLATE ASSY	
5	060300416	SCREW BIND M3X4	
6	XC2598120	SPRING PLATE	
7	XC2587050	RUBBER	
8	048030346	RETAINING RING E3	
9	XC2583121	THREAD HOOK ASSY	
10	137713050	POLYESTER SLIDER	
11	X56731050	WASHER	
12	048040346	RETAINING RING E4	
13	XC2581121	THREAD CUTTER LEVER	
14	XC2582020	THREAD CUTTER LEVER GEAR	
15	0A4300605	SCREW PAN (S/P WASHER) M3X6	
16	XC8416051	MOTOR HOLDER ASSY	
17	XC2592020	IDLE GEAR A	
18	XC2593020	IDLE GEAR B	
19	X56323021	SPRING	
20	048020346	RETAINING RING E2	
21	XC8678051	ZPM INSULATION ASSY	
22	XC8244051	ASSY:CPM LEAD WIRE	
23	060300416	SCREW BIND M3X4	
24	XC2594051	COLLAR	
25	060402016	SCREW BIND M4X20	
26	X53169050	BAND	
27	137713050	POLYESTER SLIDER	
28	XC8407050	WAVE-SHAPE SPRING WASHER	
	XC8674251	THREAD CUTTER SUPPLY ASSY (OTHER)	
	XC8674252	THREAD CUTTER SUPPLY ASSY (U.S.A., CAN)	

THREAD CUTTER MODULE

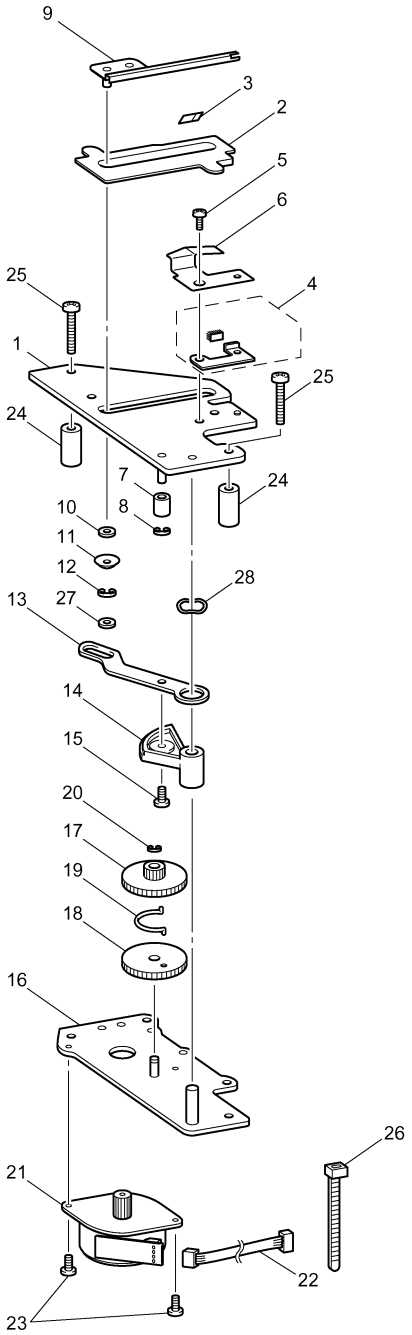

NV1500D/ NV1500
05G05HF882U70