PARTS CATALOGUE FOR

COMPUTERIZED SEWING MACHINE

NX400

3. 2003.

CONTENTS

(1) PRINCIPAL PARTS 2

(2) UPPER SHAFT MECHANISM 4

(3) NEEDLE BAR, PRESSER / FEED, ROTARY HOOK / THREAD CUTTING MECHANISM 6

(4) ROTARY HOOK DRIVE / BOBBIN WINDER MECHANISM 8

(5) THREAD GUIDE MECHANISM 10

(6) ELECTRONIC PARTS / MOTOR UNIT 12

(7) ATTACHMENTS / PRINTED MATTER / PACKING MATERIALS 14

NEEDLE-PRESSER MODULE 16

FEED MODULE 20

THREAD CUTTER MODULE 22

(1) PRINCIPAL PARTS

No.	CODE	NAME	REMARKS
1	XC4617052	REAR COVER	
2	060400816	SCREW, BIND M4 × 8	
3	XC2306052	FACE PLATE	
4	X80321001	NT LOWER THREAD CUTTER	
5	138384051	RETAINING RING,CS5	
6	XC2747051	NEEDLE THREAD LEVER KNOB	
7	XA5825051	NEEDLE THREAD LEVER SHAFT	
8	XC3039051	NEEDLE THREAD LEVER	
9	138260051	THREAD THROUGH LEVER SPRING	
10	XA6320050	SHAFT PRESSER PLATE	
11	XA5525051	WASHER,PLAIN	
12	138433051	TAPTITE,PAN B M3 × 6	
13	XC0508050	RUBBER WASHER	
14	X59629051	TAPTITE,BIND B M3 × 10	
15	052401406	SCREW PAN (S/P WASHER) M4 × 14	
16	XC4441053	FRONT COVER	
17	XC2312053	SS-BUTTON	
18	XC2313051	REVERSE BUTTON	
19	XC2314051	THREAD CUT BUTTON	
20	XC2315051	SV KEYTOP	
21	XC2316050	SV JOINT PLATE	
22	XC2317051	PCB ASSY:SS-VR F2	
23	XC4442052	RUBBER KEY F3	
24	XC4403051	PCB ASSY:OPERATION F3	
25	XC4444051	OPERATION PCB HOLDER	
26	XA1786053	SPOOL PIN	
27	XC2337051	SPOOL PIN HOLDER ASSY	
28	XC4531051	PCB UNIT:LED LAMP-FR	
29	XC2345051	LED LAMP HOLDER R SUPPORTER	
30	XZ0150051	TAPTITE,PAN B M2.6 × 10	
31	XC2346051	THREAD BOBBIN COVER	
32	136681051	TAPTITE, BIND B M3 × 8	
33	087311015	TAPTITE, CUP B M3 × 10	
34	XC2620051	BOBBIN WINDER GUIDE ASSY	
35	XA8390051	SCREW	
36	XZ0143050	SSVR INSULATION SHEET	
37	XC4418051	SINGLE LIGHT GUIDE ASSY	
38	XC4543051	BOARD PRESSER	
39	X59629051	TAPTITE,BIND B M3 × 10	
40	087411416	TAPTITE, CUP B M4 × 14	
41	XA3337052	TAPTITE,CUP P M4 × 20	
42	XC2348051	HANDLE	
43	XC2349051	HANDLE HOLDER	
44	XC2350051	HANDLE SHAFT	

No.	CODE	NAME	REMARKS
45	048040346	RETAINING RING, E4	
46	137713050	POLYESTER SLIDER	
47	XC2353051	BASE PLATE	
48	XA1805051	BASE RUBBER A	
49	XA4687051	REGULATOR ADJUSTING SCREW ASSY	
50	XC2354051	BASE PLATE COVER	
51	060300516	SCREW, BIND M3 × 5	
52	XC4447051	KNEE LIFTER ASSEMBLY	
53	XA6215151	SPRING,PLATE	
54	060260316	SCREW, BIND M2.6 × 3	
55	062400616	SCREW, PAN M4 × 6	
56	X57908051	TAPTITE,BIND S M4 × 10	
57	XC2358151	ACCESSORY TABLE	
58	XC2359052	ACCESSORY TABLE DOOR	
59	XC2360152	CASE ASSEMBLY	
60	125440050	CASE FELT	
61	XC2702150	HEAD SUPPORT SF-L	
62	XC2703050	HEAD SUPPORT SF-R	
63	XZ0161051	BLIND PLATE	
64	XC2365051	NEEDLE PLATE B	
65	XC2366051	SLIDE BUTTON	
66	XC2367051	CUTTER COVER	
67	XC2368051	SPRING PLATE	
68	X80321001	NT LOWER THREAD CUTTER	
69	XC2369051	NEEDLE PLATE COVER	
70	XC2304062	TOP COVER (U.S.A., CANADA)	
	XC2304061	TOP COVER	
71	XC4325055	INDICATION PLATE ASSY	
72	XC4433051	SCREW,PAN(T WASHER)M3 × 6	

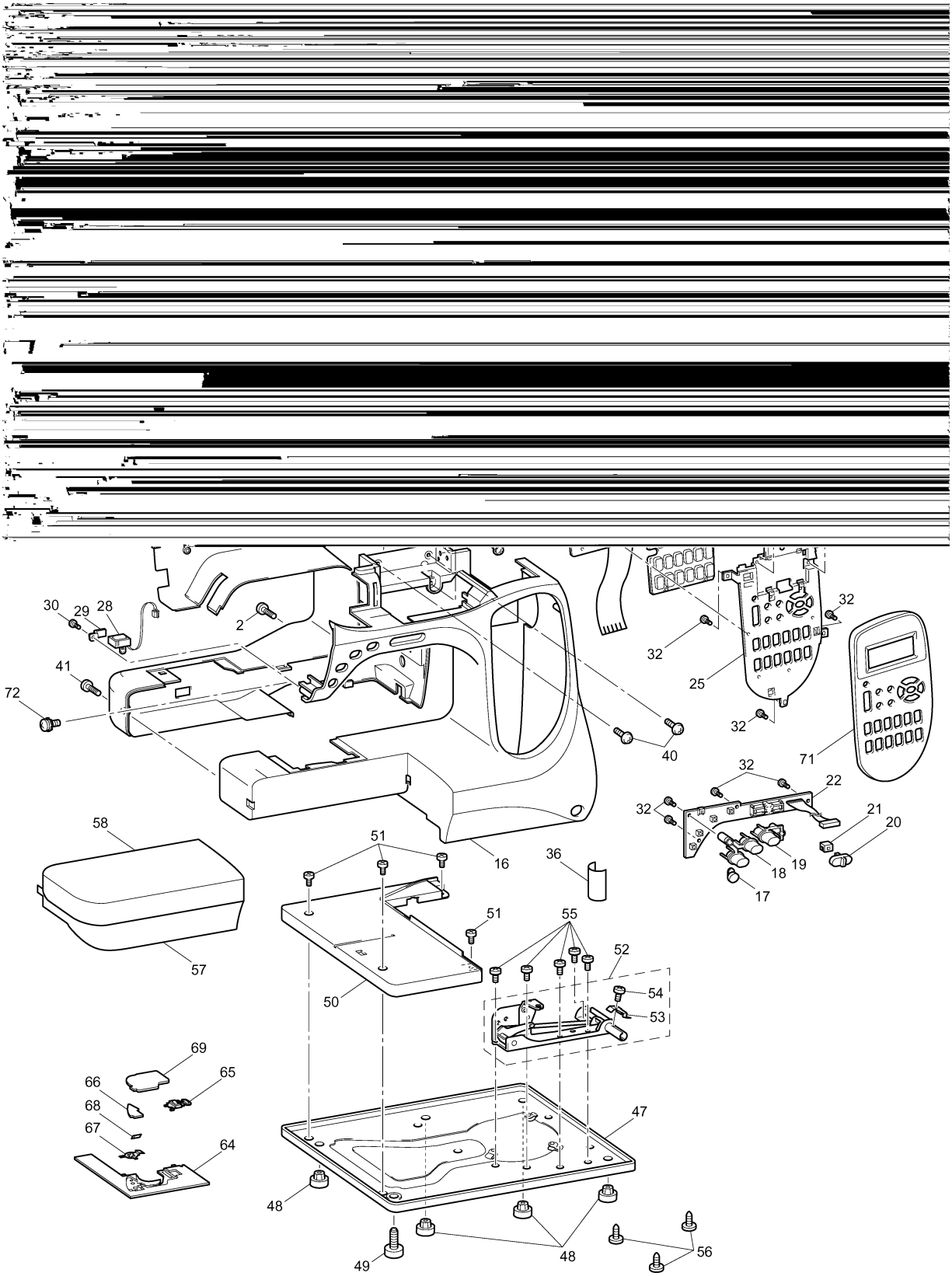
30
29
28
2
41
72
32
32
25
32
40
71
32
22
32
21
20
19
18
17
16
36
58
51
51
55
52
57
50
54
53
69
65
66
68
67
64
47
48
49
48
56

(2) UPPER SHAFT MECHANISM

No.	CODE	NAME	REMARKS
1	XC3246051	UPPER SHAFT ASSY	
2	XC2375051	PULLEY	
3	048060346	RETAINING RING, E6	
4	XC2380050	UPPER SHAFT PULLEY	
5	XC2383051	FIXED JOINT	
6	012500532	SET SCREW, SOCKET (FT) M5 × 5	
7	132421051	BUSHING PRESSER	
8	X57908051	TAPTITE,BIND S M4 × 10	
9	XC2384051	TIMING BELT 420-5GT-6	
10	XC2385051	TENSION PULLEY ASSEMBLY	
11	138172051	SCREW,PAN(S/P WASHER)M4 × 10	
12	XC2387051	PCB ASSY:NP-F2	
13	136681051	TAPTITE, BIND B M3 × 8	
14	XC2390051	PCB HOLDER	
15	060400816	SCREW, BIND M4 × 8	
16	XC3028051	INSULATION SHEET	
17	014400432	SET SCREW, SOCKET (CP) M4 × 4	

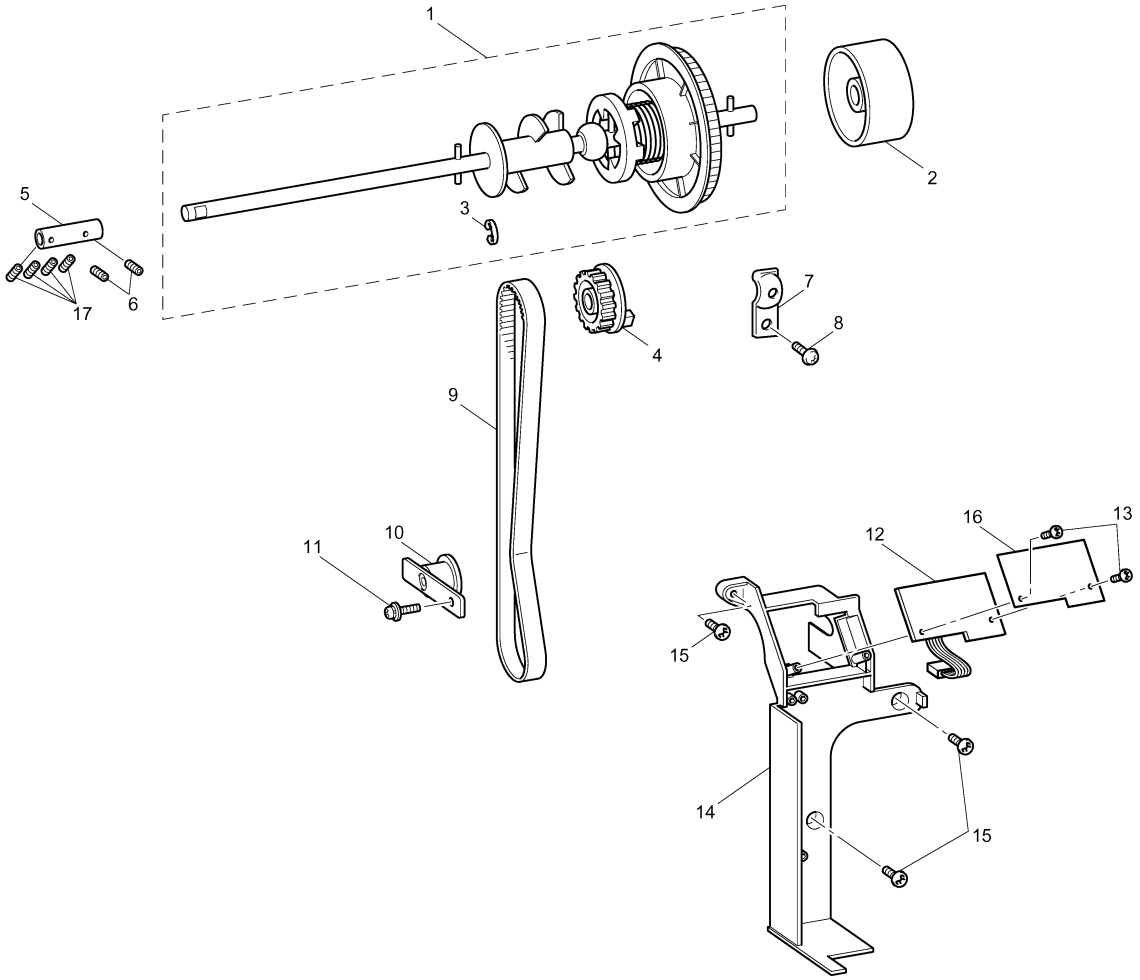
1
2
3
4
5
6
7
8
9
10
11
12
13
14
15
15
16
17

(3) NEEDLE BAR, PRESSER / FEED, ROTARY HOOK / THREAD CUTTING MECHANISM

No.	CODE	NAME	REMARKS
NEEDLE BAR / PRESSER MECHANISM			
1	XC2503051	SHAFT	
2	XC2297051	PRESSER PLATE A	
3	XC2298051	PRESSER PLATE B	
4	X57908051	TAPTITE,BIND S M4 × 10	
5	XC2504050	ADJUSTING SCREW	
6	0A1301606	SCREW,PAN(P WASHER)M3 × 16	
7	XC2505050	PLATE SPRING	
8	060400516	SCREW, BIND M4 × 5	
9	XC4532051	PCB UNIT:LED LAMP-FL	
10	XZ0149051	TAPTITE,PAN B 4 × 12	
11	048050346	RETAINING RING, E5	
12	XC4473001	WIRE ASSY	
13	048040346	RETAINING RING, E4	
14	048030346	RETAINING RING, E3	
FEED / ROTARY HOOK MECHANISM			
15	XC3153051	INNER ROTARY HOOK ASSY	
16	X52800150	BOBBIN	
17	060300416	SCREW, BIND M3 × 4	
18	XC3096051	SCREW M4	
19	XC3095050	LEADLINE GUIDE HOLDER	
20	XZ0160051	SHEET	
THREAD CUTTING MECHANISM			
21	060400516	SCREW, BIND M4 × 5	
22	060300516	SCREW, BIND M3 × 5	

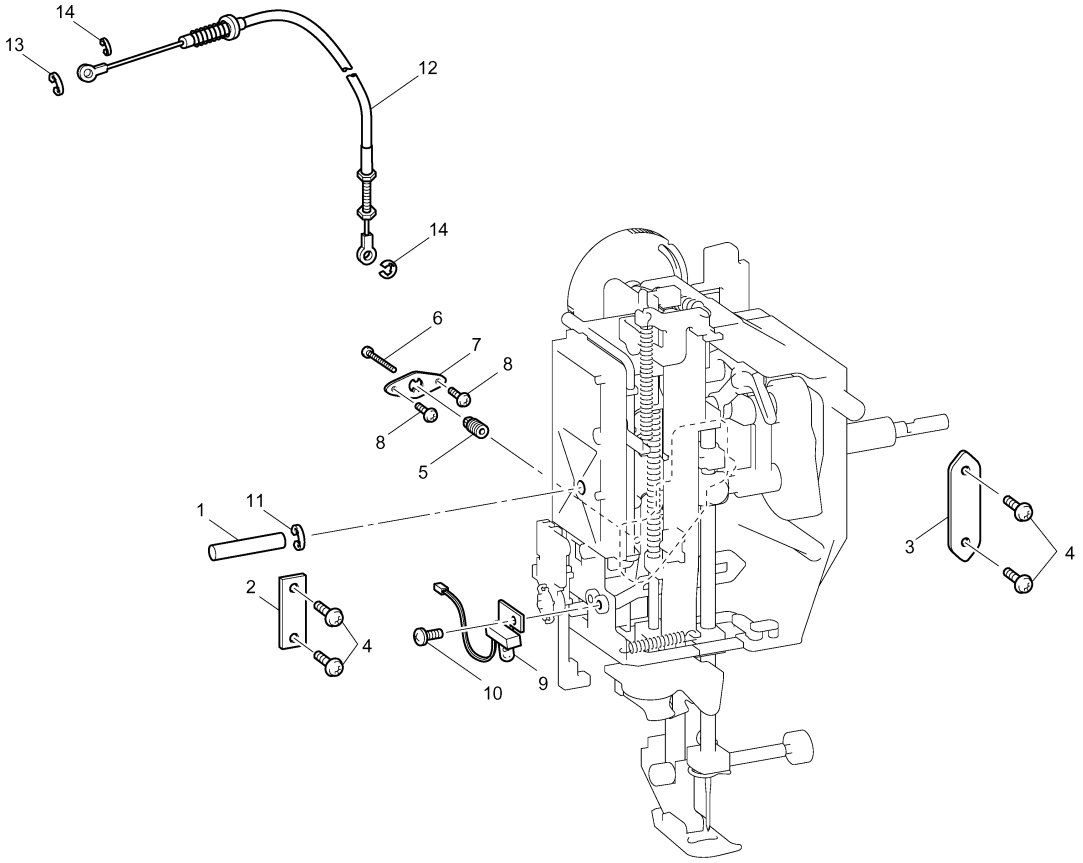
14
13
12
14
6
7
8
8
5
1
11
3
4
2
4
10
9

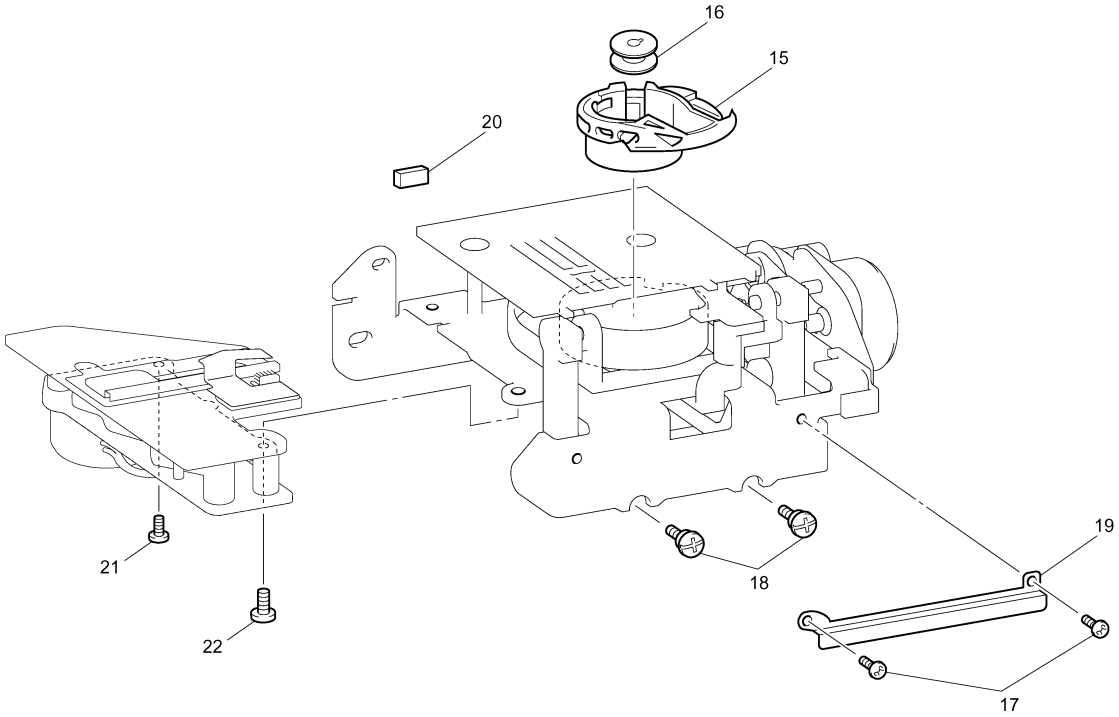
16
15
20
21
22
18
19
17

(4) ROTARY HOOK DRIVE / BOBBIN WINDER MECHANISM

No.	CODE	NAME	REMARKS
		ROTARY HOOK DRIVE MECHANISM	
1	XC2600050	LOWER SHAFT A	
2	XC2601051	TIMING PULLEY D	
3	014500532	SET SCREW, SOCKET (CP) M5 × 5	
4	X52664050	LOWER SHAFT BUSHING	
5	X51383050	WASHER,THRUST	
6	048060346	RETAINING RING, E6	
7	137768151	SET SCREW COLLAR	
8	014400432	SET SCREW, SOCKET (CP) M4 × 4	
9	XC2602051	JOINT	
10	012500532	SET SCREW, SOCKET (FT) M5 × 5	
11	XC2602051	JOINT	
12	012500532	SET SCREW, SOCKET (FT) M5 × 5	
13	132421051	BUSHING PRESSER	
14	X57908051	TAPTITE,BIND S M4 × 10	
15	XC2603050	DISK	
		BOBBIN WINDER MECHANISM	
16	XC2605051	BOBBIN WINDER ASSEMBLY HOLDER	
17	XC2606051	BW SHAFT HOLDER ASSEMBLY	
18	X55238051	RUBBER RING	
19	125928050	BOBBIN WINDER SHAFT SPRING	
20	XA2862051	BOBBIN WINDER SHAFT STOPPER	
21	XZ0070051	BOBBIN WINDER SPRING	
22	XC2614051	SW ADJUST PLATE	
23	060300616	SCREW, BIND M3 × 6	
24	XC2612051	SW ASSY:BW-F	
25	XC4672051	BOBBIN BASE ASSY	
26	XC2616051	BOBBIN BASE	
27	XA5877051	BOBBIN THREAD CUTTER HOLDER	
28	X80321001	NT LOWER THREAD CUTTER	
29	XC2618051	BOBBIN WINDER COVER	
30	XA8390051	SCREW	
31	XC4517051	BOBBIN PRESSER	
32	0A4302006	SCREW	
33	021300106	NUT, 1 M3	
34	XC2615051	BW HOLDER SUPPORTER	
35	X57908051	TAPTITE,BIND S M4 × 10	
36	060400816	SCREW, BIND M4 × 8	

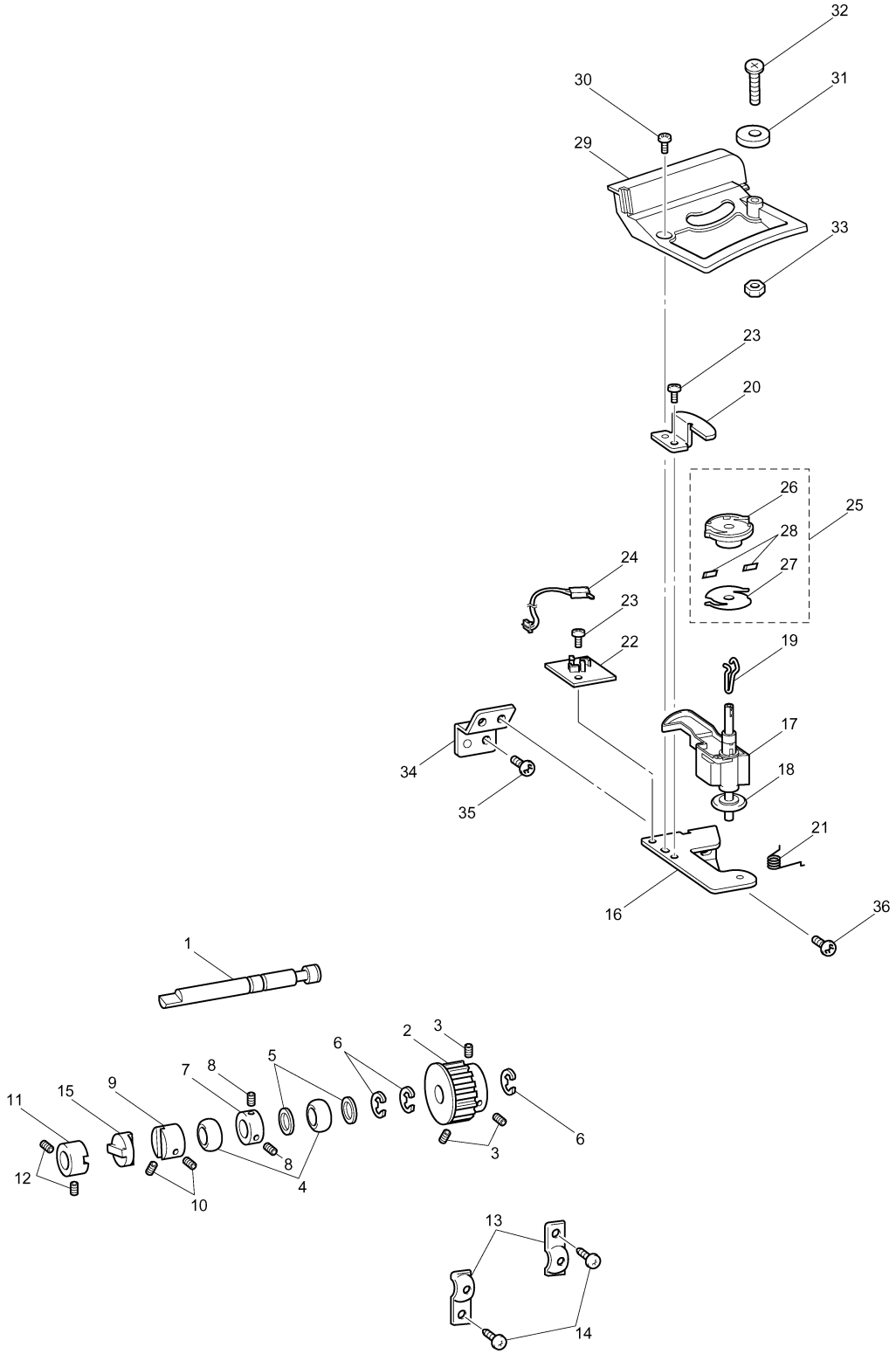
32
30
31
29
33
23
20
26
25
28
24
27
23
22
19
17
34
18
35
21
16
36
1
2
3
6
5
7
8
9
15
11
6
3
8
12
4
10
13
14

(5) THREAD GUIDE MECHANISM

No.	CODE	NAME	REMARKS
1	XC2624151	THREAD GUARD ASSEMBLY	
2	XA0083051	TENSION DISC A	
3	XC2626051	TENSION DISC B	
4	XC3437051	TENSION ADJUSTING SCREW	
5	XA1388051	TENSION DISC WASHER	
6	XC2627051	TENSION RELEASE PLATE ASSY	
7	XA9900051	THREAD TENSIONSPRING	
8	109763053	WASHER	
9	XC2629051	TENSION PLATE ASSY F2	
10	XC2630054	THREAD TENSION DIAL	
11	137999050	POLYESTER SLIDER	
12	048030346	RETAINING RING, E3	
13	XC2633051	SPRING PLATE	
14	060300416	SCREW, BIND M3 × 4	
15	XA9935050	SPRING TAPE	
16	XC2635051	TENSION RELEASE HOLDER ASSY	
17	XA9571051	TENSION RELEASERLINK	
18	048030346	RETAINING RING, E3	
19	XC2638051	TENSION PRESSURE ASSY	
20	XA9575051	TENSION PLATE	
21	XA9576051	SPACER	
22	XA9577051	SPRING	
23	XC2640051	TENSION RELEASE CAM	
24	012300432	SET SCREW, SOCKET (FT) M3 × 4	
25	X57363051	POWER LOCK 2 × 3	
26	X57605051	SPRING	
27	048020346	RETAINING RING, E2	
28	XC2644051	PLATE ASSEMBLY	
29	XC2647051	THREAD GUIDE SHUTTER	
30	XC2749051	THREAD GUIDE	
31	XZ0145051	THREAD TAKE UP SPRING	
32	XC2648051	THREAD CATCHING SPRING CASE	
33	0A4301806	SCREW, PAN S/P WASHER M3 × 18	
34	XC2649050	THREAD GUIDE SHUTTER LINK	
35	048030346	RETAINING RING, E3	
36	XC2650051	SPRING	
37	XC2651050	THREAD GUIDE WIRE	
38	XA9996051	WASHER,PLAIN	
39	052300606	SCREW, PAN (S/P WASHER) M3 × 6	
40	060300416	SCREW, BIND M3 × 4	
41	XC2641051	PRESSER SWITCH HOLDER	
42	XC2642051	SW ASSY:PF-F	
43	X55260153	SPOOL PRESSER C	
44	XA9787051	SPRING	
45	085411015	TAPTITE, BIND B M4 × 10	
46	XC2652152	THREAD GUIDE COVER	
47	XC2655053	FRONT THREAD GUARD COVER	
48	XC4203151	THREAD GUIDE ASSY	
49	060300416	SCREW, BIND M3 × 4	
50	XC2659052	THREAD GUIDE COVER	
51	085310615	TAPTITE, BIND B M3 × 6	
52	052300606	SCREW, PAN (S/P WASHER) M3 × 6	

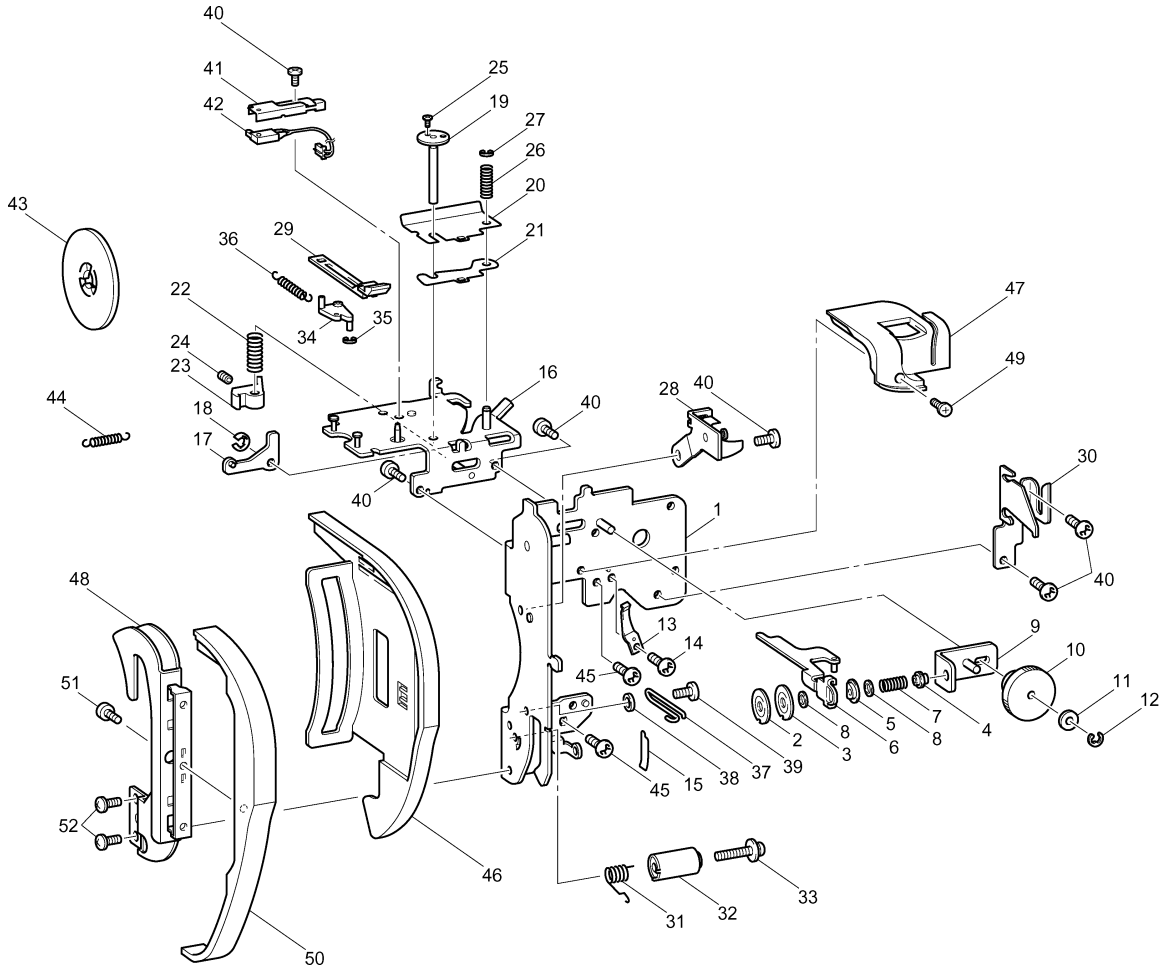
40
41
42
25
19
27
26
20
21
43
36
29
22
35
34
24
23
16
44
18
17
40
28
40
47
49
30
40
1
48
13
14
9
10
11
12
51
45
2
8
3
5
6
7
8
4
39
37
38
15
45
52
46
33
32
31
50

(6) ELECTRONIC PARTS / MOTOR UNIT

No.	CODE	NAME	REMARKS
		ELECTRONIC PARTS	
1	XC4388051	PCB ASSY:MAIN F1D-B	
2	136681051	TAPTITE, BIND B M3 × 8	
3	060400816	SCREW, BIND M4 × 8	
4	XC2672051	LEAD ASSY:BH CABLE-F	
5	XA0286051	WIRE CLIP	
6	X57908051	TAPTITE,BIND S M4 × 10	
7	X53169050	BAND	
8	XC2675252	POWER SUPPLY UNIT,F (U.S.A., CANADA)	
	XC2675251	POWER SUPPLY UNIT,F	
9	XC4488051	FC JACK-F SUPPLY ASSY	CHG
10	X51271001	NUT	
11	136681051	TAPTITE, BIND B M3 × 8	
12	052401406	SCREW PAN (S/P WASHER) M4 × 14	
13	XC4412051	INLET ASSY:F1D-US (U.S.A., CANADA)	
	XC4417051	INLET ASSY:F1D-EU	
14	060400616	SCREW, BIND M4 × 6	
15	XA2815151	POWER SUPLY CORD FOR UL,CS (U.S.A., CANADA)	
	XA0070151	POWER SUPPLY CORD (EUROPE)	
	X59354051	POWER SUPPLY CORD (U.K.)	
	X59328151	POWER SUPPLY CORD (AUSTRALIA)	
		MOTOR UNIT	
16	XC2685051	T BELT494-2GT-6	
17	XC2687051	ASSY:MAIN MOTOR-F	
18	XC2690051	MOTOR HOLDER	
19	XA9649050	FENDER RUBBER	
20	XA9650051	MOTOR SPACER PRESSER	
21	XC3027051	SPACER 4 × 6	
22	052401406	SCREW PAN (S/P WASHER) M4 × 14	
23	XA8474051	UPSET 4 × 12 DB	
24	XA9652150	MOTOR FAN	
25	XC1154051	CONTOROLLER:FC-309-81	

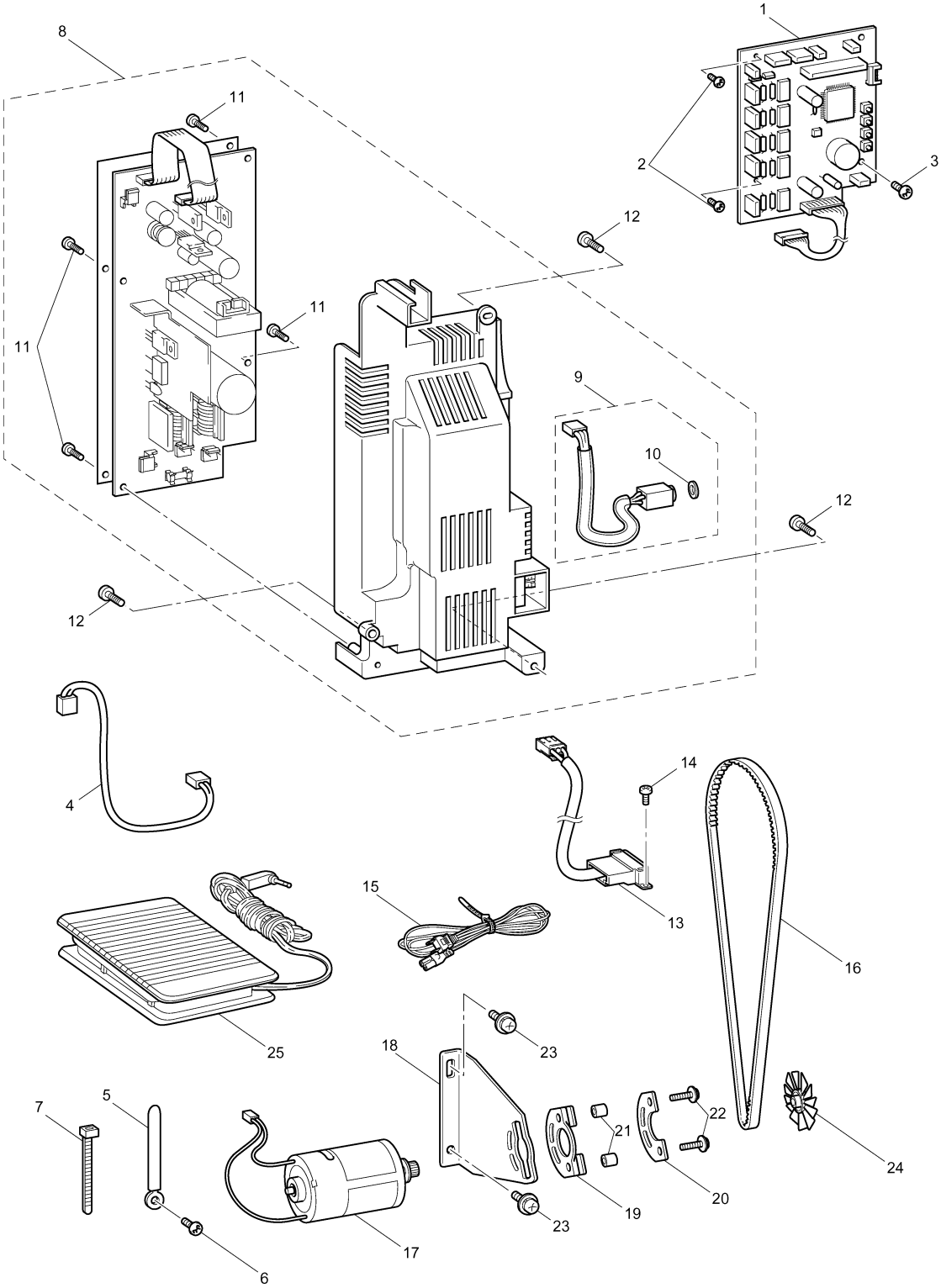
1
2
3
4
5
6
7
8
9
10
11
11
11
12
12
12
13
14
15
16
17
18
19
20
21
22
23
23
24
25

(7) ATTACHMENTS / PRINTED MATTER / PACKING MATERIALS

No.	CODE	NAME	REMARKS
		ATTACHMENTS	
1	XC4487051	ACCESSORY BAG	
2	XC2691051	BH PRESSER FOOT ASSY	
3	X54243001	SEAM RIPPER	
4	X58358051	Z NEEDLE ASSY	
5	X52800150	BOBBIN	
6	X59476051	CLEANING BRUSH	
7	XC3098051	OVERCASTING STITCH FOOT ASSY	
8	130012054	SPOOL PRESSER A	
9	X56409051	BLIND STITCH FOOT ASSY	
10	X59370051	ZIPPER FOOT	
11	130013154	SPOOL PRESSER B	
12	XA5523050	NET	
13	X55466051	SCREW DRIVER	
14	X55467051	SCREW DRIVER	
15	X55468051	SCREW DRIVER S	
16	135793051	PUNCH	
17	X53840351	TRANSPARENCY PRESSER FOOT	
18	130489001	BUTTONING FOOT	
19	XC4654051	EXTRA SPOOL PIN ASSY	
20	X55260153	SPOOL PRESSER C	
21	X57367051	BAG,135 × 150	
22	X59296151	TWIN NEEDLE (1PC)	
23	XC4489051	ACCESSORY TRAY	
24	XC4490050	SPONGE	
25	XA6941052	KNEE LIFTER LEVER ASSY	
26	XA4322001	QUILTING FOOT	
27	X59816001	WALKING FOOT ASSEMBLY	
28	X51804001	STITCH FOOT	
29	103561002	ZIPPER FOOT	
30	XA4783001	NO STICK FOOT H	
31	XA7869001	APPLIQUE FOOT	
32	XC4549050	GRID SHEET SET	
33	XA0188050	BAG	
		PRINTED MATTER	
34	XC4547051	INSTRUCTION BOOK (English)	
	XC4582051	INSTRUCTION BOOK (French)	
	XC4583051	INSTRUCTION BOOK (German)	
	XC4584051	INSTRUCTION BOOK (Dutch)	
	XC4585051	INSTRUCTION BOOK (Spanish)	
	XC4586051	INSTRUCTION BOOK (Italian)	
35	XC0378051	WARRANTY CARD (U.S.A.)	
	UH385100	WARRANTY CARD EUR (EUROPE)	
	XA6351151	WARRANTY CARD (ITALY)	

No.	CODE	NAME	REMARKS
36	181401172	INSERTION WARRANTY COUPON (CANADA)	
	181401137	INSERTION WARRANTY COUPON (U.K.)	
37	XC4546051	QUICK REFERENCE GUIDE	
38	XC4589051	QUICK REFERENCE GUIDE (Pattern selecting)	
39	XC4545051	CAUTION SHEET	
40	XC4544051	LANGUAGE SETTING SHEET	
41	130800051	BAG,220 × 310	
		PACKING MATERIALS	
42	XC2704150	BODY SUPPORT SF	
43	XC2705050	CASE SUPPORT	
44	XC2706050	CASE SUPPORT SF-R	
45	X60439151	BAG,630 × 630T	
46	XC4623051	CARTON (U.S.A., CANADA)	
	XC4623052	CARTON	
47	XC4631051	PAD	
48	XC4515050	BAG, BUBBLE PACK 250 × 250	
49	X57847051	PLUG LABEL	
50	XC4762050	THREADER SUPPORT SF	
51	XC4726051	CANADA CLEAR SEAL	
52	X61319051	BAG,750 × 600H	

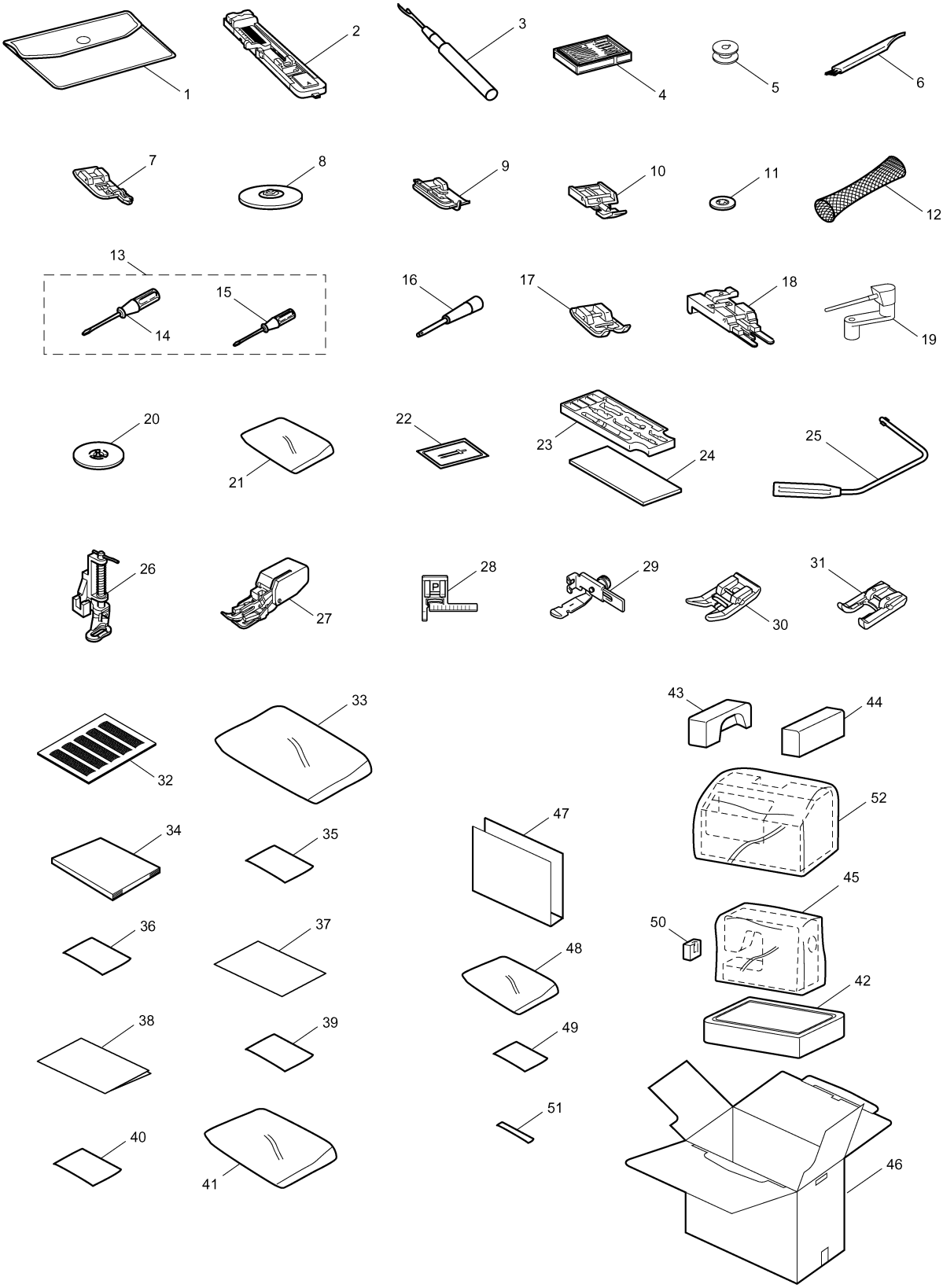
1
2
3
4
5
6
7
8
9
10
11
12
13
14
15
16
17
18
19
20
21
22
23
24
25
26
27
28
29
30
31
32
33
34
35
36
37
38
39
40
41
42
43
44
45
46
47
48
49
50
51
52

NEEDLE-PRESSER MODULE

No.	CODE	NAME	REMARKS
1	XC2394121	UPPER UNIT HOLDER	
2	XC2395121	SHAFT BUSHING ASSEMBLY	
3	0A5401405	SCREW,PAN(S/P WASHER)M4 × 14DB	
4	XC2398020	SHAFT BUSHING A	
5	XC2399021	PRESSER BAR BUSHING	
6	085310815	TAPTITE, BIND B M3 × 8	
7	XC5362020	PLATE SPRING	
8	XC2400021	THREAD TAKE-UP COUNTER WEIGHT	
9	012500532	SET SCREW, SOCKET (FT) M5 × 5	
10	XC2401021	UNIT SHAFT	
11	132434050	WASHER	
12	048060346	RETAINING RING, E6	
13	XC2402021	NEEDLE BAR SUPPORTER ASSY	
14	XC2418020	HOOK RELEASE PLATE	
15	060260516	SCREW, BIND M2.6 × 5	
16	XC3032051	THREADER HOOK ASSY	
17	XA3565021	LINK A ASSY	
18	XA3569021	LINK B	
19	XC2415021	THREAD GUIDE ASSY	
20	XC2419021	SHAFT	
21	000020415	SCREW,BIND M2 × 4	
22	XC2420020	SHAFT	
23	XC2421021	PLATE	
24	060300516	SCREW, BIND M3 × 5	
25	XC2423051	NEEDLE BAR	
26	XC2424021	NEEDLE BAR THREAD GUIDE	
27	X53053052	SCREW SM2.38	
28	XC2426020	NEEDLE THREAD PLATE	
29	XC2427051	NEEDLE BROCK	
30	XC2428021	NEEDLE CLAMP SCREW	
31	014401232	SET SCREW, SOCKET (FT) M4 × 12	
32	X56851051	LOCK NUT	
33	XC2429021	SPRING	
34	XZ0152051	NEEDLE BAR CRANK ROD ASSY	
35	132051052	SCREW, FLAT SM3.57-40 × 7 L	
36	012500532	SET SCREW, SOCKET (FT) M5 × 5	
37	014400432	SET SCREW, SOCKET (CP) M4 × 4	
38	XC2434021	NEEDLE THREAD BLOCK	
39	012400432	SET SCREW, SOCKET (FT) M4 × 4	
40	XC2435020	ZIGZAG ADJUSTING NUT	
41	018301032	BOLT,SOCKET M3 × 10	
42	XC2748021	SPRING-Z	
43	XC2436021	NEEDLE HOLDER BROCK	
44	XC2437021	SHAFT ASSY	

No.	CODE	NAME	REMARKS
45	XC2440021	SHAFT	
46	014300532	SET SCREW, SOCKET (CP) M3 × 5	
47	XC2441021	SPRING	
48	XC2442051	THREAD TAKE-UP LEVER	
49	XC2443020	THREAD TAKE-UP LEVER LINK	
50	XC2444021	PRESSER BAR	
51	XC2445021	PRESSER BAR CLAMP ASSY	
52	014501032	SET SCREW,SOCKET(CP)M5 × 10	
53	XC4457051	SPRING	
54	XC4458050	PRESSER SPRING SUPPORTER	
55	XC3015051	PRESSER FEED HOLDER ASSY	
56	XA4813051	SCREW	
57	XC3021051	Z FOOT	
58	XC2451021	PRESSER FOOT LIFTER	
59	XC4459051	PRESSER LIFT SHAFT	
60	XC4460051	LIFTER ASSY	
61	XA1860150	WASHER	
62	048040346	RETAINING RING, E4	
63	XC2453021	LEVER GUIDE SHAFT	
64	XC2455021	LEVER A ASSY	
65	XC2458021	LEVER B	
66	XC2459020	CAP	
67	XC2460021	TORSION SPRING	
68	048030346	RETAINING RING, E3	
69	XC2461021	SPRING	
70	XC2462021	LEVER PRESSER PLATE	
71	085310615	TAPTITE, BIND B M3 × 6	
72	XC2463121	BH SWITCH ASSY	
73	XZ0149051	TAPTITE,PAN B 4 × 12	
74	XC2474020	Z ZIGZAG CAM	
75	XC2476021	Z ZIGZAG LEVER ASSY	
76	XC2480020	Z LEVER CUP	
77	XC2481021	MOTOR,PULSE:Z SMJ35-4840-A	
78	085311015	SCREW, BIND B TITE 3 × 10	
79	XC2483020	T CAM	
80	XC2491021	THREAD RELEASER ASSY	
81	XC2494021	THREAD RELEASE LEVER ASSY	
82	XC4465051	ADJUSTING PLATE ASSY	
83	XC2501121	TENSION RELEASER C	
84	048030346	RETAINING RING, E3	
85	085411015	TAPTITE, BIND B M4 × 10	
86	XC3037021	SCREW3 × 10	
87	XC2475021	SHAFT	
88	048020346	RETAINING RING, E2	

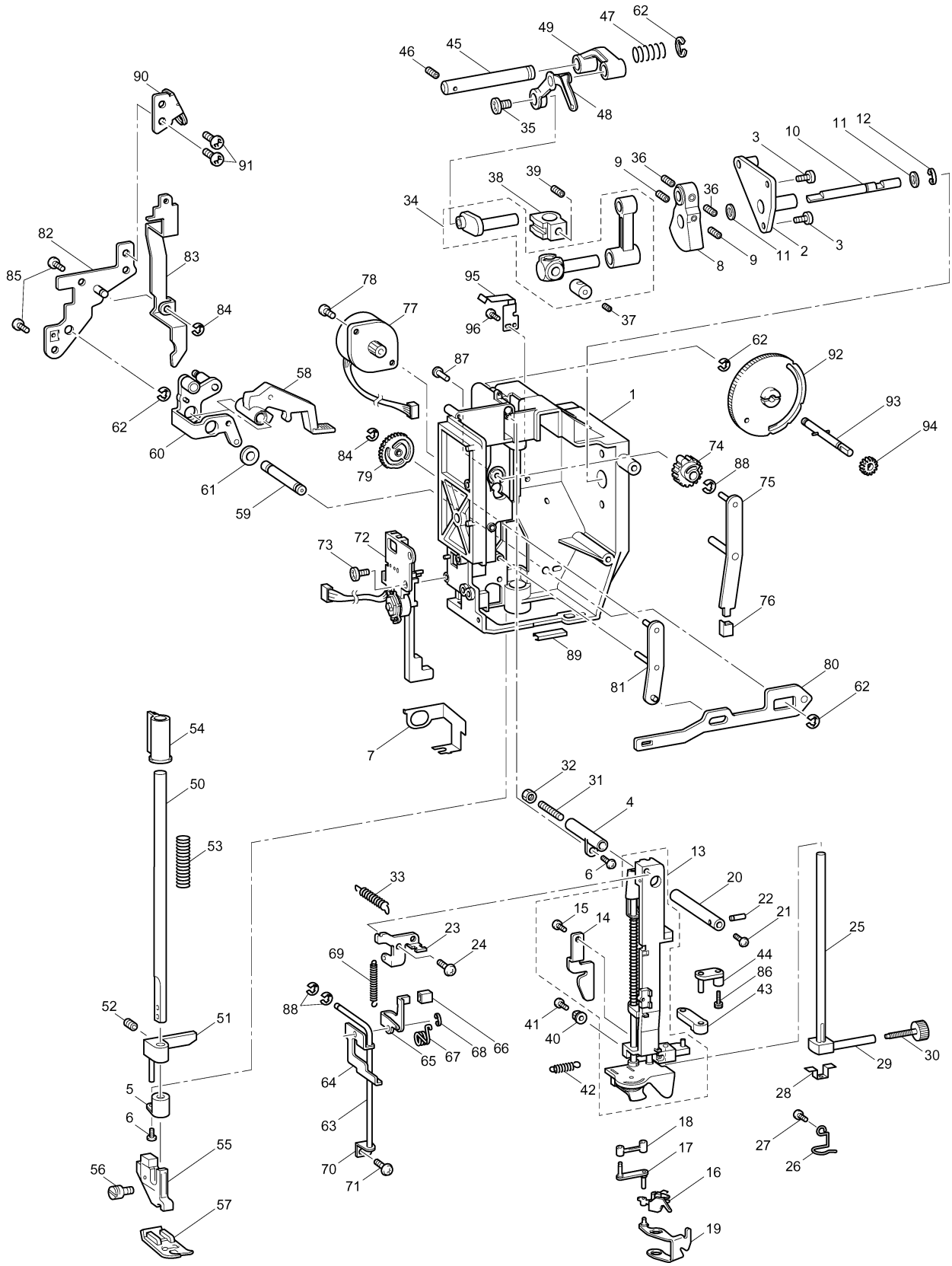

62
47
49
45
46
48
35
90
91
3
10
11
12
9
36
38
39
34
36
82
83
85
84
8
9
11
2
3
78
95
77
96
37
62
92
87
58
1
93
94
62
60
84
79
74
88
61
75
59
73
72
76
89
80
81
62
54
7
32
31
50
4
53
13
6
33
20
22
21
15
14
23
24
25
69
44
86
43
88
52
51
41
40
65
67
68
66
29
30
64
42
28
5
63
18
27
6
55
17
26
56
70
16
71
57
19

NEEDLE-PRESSER MODULE

No.	CODE	NAME	REMARKS
89	XC3034020	THREAD GUIDE PLATE	CHG
90	XC4467051	WIRE GUIDE PLATE U	CHG
91	060400616	SCREW, BIND M4 × 6	CHG
92	XC4468051	PRESSER DIAL	CHG
93	XC4522051	PRESSER DIAL SHAFT ASSY	CHG
94	XC4471050	PRESSER DIAL GEAR	CHG
95	XC4472051	PLATE SPRING	CHG
96	085310815	TAPTITE, BIND B M3 × 8	CHG
		NEEDLE-PRESSER MODULE F3	

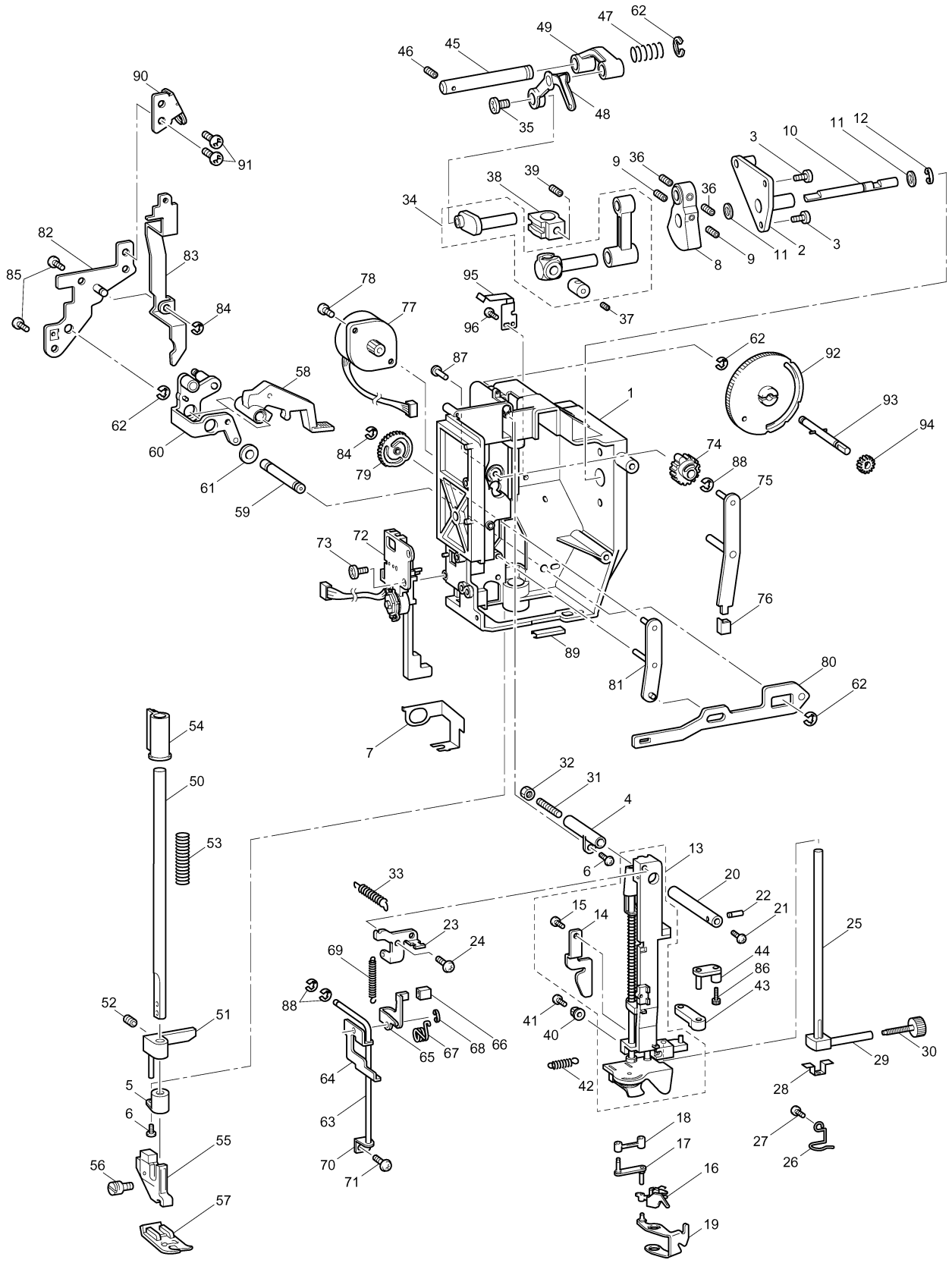

62
47
49
45
46
48
35
90
91
3
10
11
12
9
36
38
39
34
36
82
83
85
84
8
9
11
2
3
78
95
77
96
37
62
92
87
58
1
93
94
62
60
84
79
74
88
61
75
59
73
72
76
89
80
81
62
54
7
32
31
50
4
53
13
6
33
20
22
21
15
14
23
24
25
69
44
86
43
88
52
51
41
40
65
67
68
66
29
30
64
42
28
5
63
18
6
55
17
27
56
70
16
26
71
57
19

FEED MODULE

No.	CODE	NAME	REMARKS
1	XC3356051	FEED BASE	
2	XC2510021	FEED BAR	
3	XC2511021	FEED DOG	
4	XC2512021	FEED BAR SHAFT A	
5	XC2513021	FEED BAR SHAFT B	
6	XC2514021	FEED BAR SPACER	
7	048020346	RETAINING RING, E2	
8	XC2516021	FEED ARM A	
9	XC2517021	FEED ARM B ASSY	
10	XC2521021	FEED SUPPORTING PLATE ASSY	
11	048020346	RETAINING RING, E2	
12	048030346	RETAINING RING, E3	
13	137999050	POLYESTER SLIDER	
14	XZ0174021	SPRING	
15	XC2525021	HORIZONTAL FEED SHAFT	
16	048050346	RETAINING RING, E5	
17	X50546050	WASHER,THRUST	
18	XC2527021	FEED ADJUSTER	
19	XC2529020	F GEAR	
20	XC2530021	SPRING	
21	137713050	POLYESTER SLIDER	
22	XC2531021	SPRING	
23	XC2532021	FPM HOLDER ASSY	
24	XC2534021	MOTOR,PULSE:F SMJ35-4840-C	
25	XC2587050	RUBBER	
26	060300516	SCREW, BIND M3 × 5	
27	XC3338021	SCREW3 × 8	
28	018402532	BOLT,SOCKET M4 × 25	
29	XC2537021	SPRING	
30	XC2538021	SPRING	
31	XC2539021	BUSHING SUPPORTER ASSY	
32	060400616	SCREW, BIND M4 × 6	
33	XC2542021	BUSHING PRESSER B	
34	060300516	SCREW, BIND M3 × 5	
35	XC3941051	VERTICAL ADJUSTER SCREW ASSY	
36	XC2546021	M5 NUT	
37	XC2547021	SPRING	
38	XC2549021	VERTICAL FEED SHAFT	
39	XC2550021	SPRING	
40	XC2551020	VERTICAL LEVER	
41	XC2552021	SET SCREW COLLAR	
42	014400432	SET SCREW, SOCKET (CP) M4 × 4	
43	048030346	RETAINING RING, E3	
44	XC2553020	VERTICAL SUPPURTING PLATE	

No.	CODE	NAME	REMARKS
45	137713050	POLYESTER SLIDER	
46	XC2210051	OUTER ROTALY HOOK ASSY	
47	XC2230051	OUTER ROTARY HOOK SHAFT	
48	137805052	SPACER	
49	137976051	WASHER 6	
50	014400632	SET SCREW, SOCKET (CP) M4 × 6	
51	XC2555021	INNER ROTARY HOOK BRACKET ASSY	
52	XC2559021	STOPPER PLATE BLOCK ASSY	
53	060400516	SCREW, BIND M4 × 5	
54	060300816	SCREW, BIND M3 × 8	
55	XC2562021	LOWER SHAFT B ASSY	
56	X52664050	LOWER SHAFT BUSHING	
57	X51383050	WASHER,THRUST	
58	048060346	RETAINING RING, E6	
59	137768151	SET SCREW COLLAR	
60	014400432	SET SCREW, SOCKET (CP) M4 × 4	
61	XC2566021	BUSHING SUPPORTER A	
62	XC2567021	BUSHING PRESSER A	
63	060401616	SCREW, BIND M4 × 16	
64	XC2569051	NEEDLE PLATE A	
65	XC2570021	STOPPER PLATE	
66	XC2571021	F GEAR STOPPER PLATE	
67	060260316	SCREW, BIND M2.6 × 3	
68	X50487051	SCREW M4	
69	XC2572021	DROP KNOB	
70	XC2573021	SLIDE SHAFT B	
71	XC2574021	SPRING PLATE	
72	X53169050	BAND	
73	060300416	SCREW, BIND M3 × 4	
		FEED MODULE	

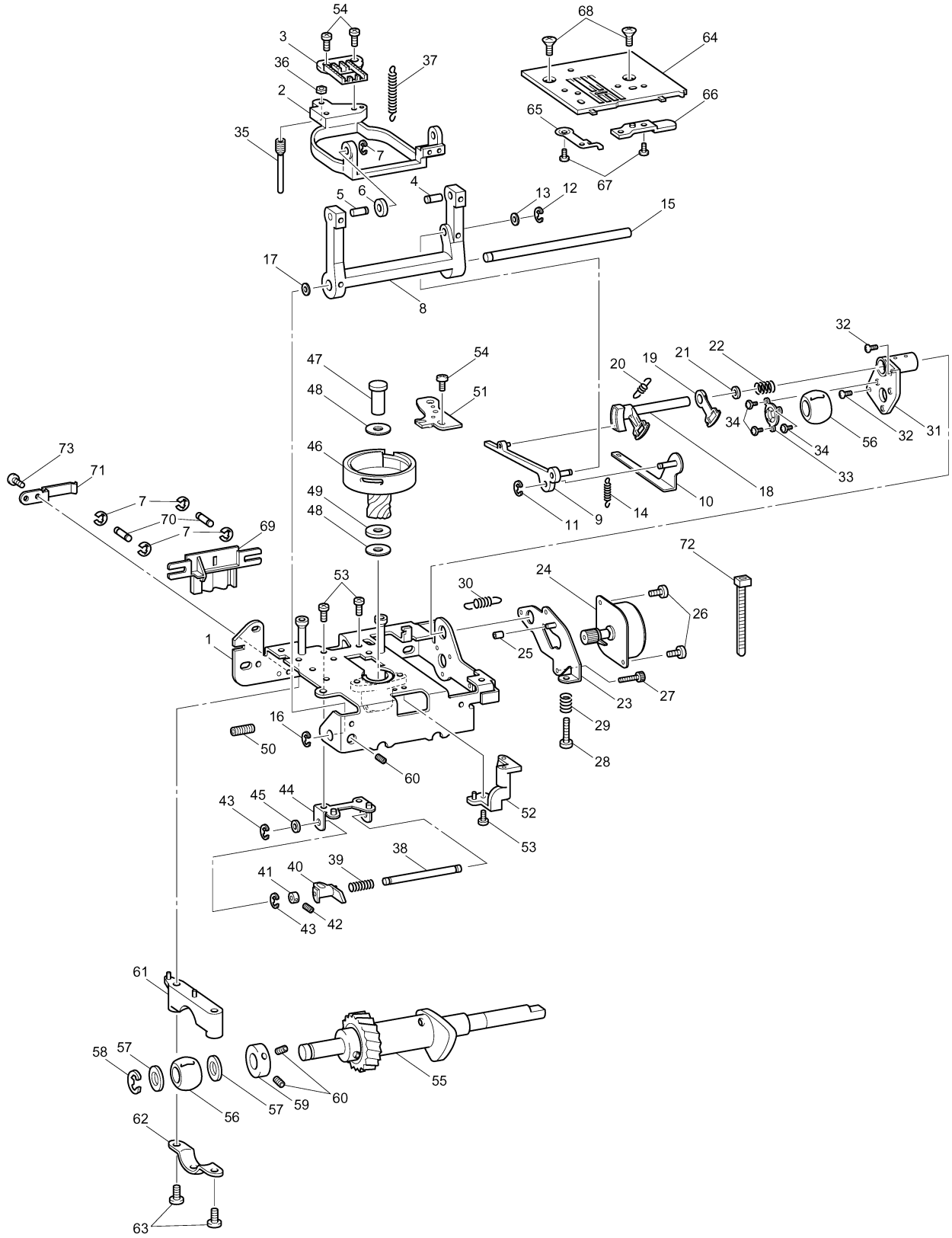
54
3
36
2
35
37
7
6
5
4
68
64
66
65
67
13
12
15
17
8
32
22
21
19
20
47
48
54
51
34
56
32
31
34
33
18
10
14
9
11
46
49
48
73
71
7
70
7
69
72
53
30
24
26
1
25
23
27
29
28
16
50
60
52
53
43
45
44
38
39
40
41
42
43
61
58
57
56
57
59
60
55
62
63

THREAD CUTTER MODULE

No.	CODE	NAME	REMARKS
1	XC2576021	THREAD CUTTER FRAME ASSY	
2	XC2579020	SPACER	
3	X80321001	NT LOWER THREAD CUTTER	
4	XC2596021	PRESSER PLATE	
5	XC2597001	PILE 4 × 8	
6	060300416	SCREW, BIND M3 × 4	
7	XC2598020	SPRING PLATE	
8	XC2587050	RUBBER	
9	048030346	RETAINING RING, E3	
10	XC2583021	THREAD HOOK ASSY	
11	137713050	POLYESTER SLIDER	
12	X56731050	WASHER	
13	048040346	RETAINING RING, E4	
14	XC2581021	THREAD CUTTER LEVER	
15	XC2582020	THREAD CUTTER LEVER GEAR	
16	0A4300605	SCREW, PAN (S/P WASHER) M3 × 6	
17	XC2588021	MOTOR HOLDER ASSY	
18	XC2592020	IDLE GEAR A	
19	XC2593020	IDLE GEAR B	
20	X56323021	SPRING	
21	048020346	RETAINING RING, E2	
22	XC2331121	MOTOR PULSE:C SMJ35-4840-B	
23	060300416	SCREW, BIND M3 × 4	
24	XC2594021	COLLAR	
25	060402016	SCREW, BIND M4 × 20	
26	X53169050	BAND	
27	137713050	POLYESTER SLIDER	
28	XZ0147020	DUST COVER	
		THREAD CUTTER MODULE	

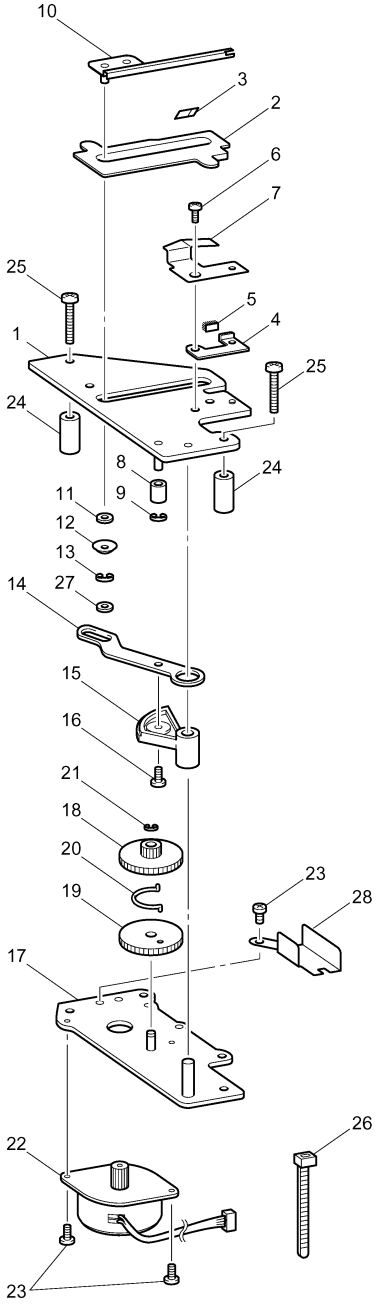
10
3
2
6
7
25
5
4
1
25
24
8
24
11
9
12
13
27
14
15
16
21
18
20
23
28
19
17
26
22
23

NX400
08C03HF882S62