PARTS CATALOGUE FOR

COMPUTERIZED SEWING MACHINE

NV4000D
NV4000

08.2005.

CONTENTS

(1) PRINCIPAL PARTS 2

LCD SUPPLY ASSEMBLY 6

(2) UPPER SHAFT / NEEDLE BAR, PRESSER MECHANISM 8

(3) FEED, ROTARY HOOK / SIDE FEED / THREAD CUTTING MECHANISM 10

(4) ROTARY HOOK DRIVE / BOBBIN WINDER MECHANISM 12

(5) THREAD GUIDE MECHANISM / THREAD HOOK MECHANISM 14

(6) ELECTRONIC PARTS / MOTOR UNIT 18

(7) EMBROIDERY UNIT 20

(8) ATTACHMENTS / PACKING MATERIALS / PRINTED MATTER 24

NEEDLE-PRESSER MODULE 28

FEED MODULE 32

THREAD CUTTER MODULE 36

(1) PRINCIPAL PARTS

No.	CODE	NAME	REMARKS
1	XC7683051	REAR COVER	
2	087411016	TAPTITE CUP B M4X10	
3	087411416	TAPTITE CUP B M4X14	
4	XC7717051	PLATE A	
5	XC7718051	PLATE B	
6	XC7719151	FACE PLATE ASSY	
7	X80321001	NT LOWER THREAD CUTTER	
8	138384051	RETAINING RING,CS5	
9	0A6401206	SCREW, PAN(T WASHER)M4X12	
10	XC7685051	FRONT COVER	
11	XC7723051	SS BUTTON	
12	XC7724051	BUTTON	
13	XC7726051	THREAD BUTTON	
14	XC8196051	ASSY:THSW PCB D6	
15	XC7728051	SV KEYTOP	
16	XC7729051	SV JOINT PLATE	
17	XC8199051	ASSY:SS PCB D6	
18	XC8202051	ASSY:VR PCB D6	
19	XC7981051	PCB UNIT:LED LAMP-D6R	
20	085311415	TAPTITE BIND B M3X14	
21	136681051	TAPTITE, BIND B M3X8	
22	X59629051	TAPTITE,BIND B M3X10	
23	XC7838051	PLATE C	
24	XC7839051	PLATE D	
25	X53169050	BAND	
26	137947001	CLIP	
27	087411016	TAPTITE CUP B M4X10	
28	XC8680050	S HOLDER	
29	XC4433051	SCREW,PAN(T WASHER)M3X6	
30	XC8478250	INVERTER COVER	
31	XA9400151	CONNECT COVER	
32	146200051	RETAINING RING, CS4	
33	XC7686051	HANDLE	
34	XC7731051	HANDLE HOLDER L ASSY	
35	XC7733051	HANDLE HOLDER R ASSY	
36	048040346	RETAINING RING E4	
37	XC7736051	BASE PLATE	
38	XA1805051	BASE RUBBER A	
39	XA4687051	ADJUSTING SCREW ASSY	
40	XA4689051	BASE PLATE RUBBER	
41	XA9386051	BASE PLATE RUBBER	
42	XA9387050	BASE PLATE RUBBER	
43	062500616	SCREW PAN M5X8	
44	XC7737051	KNEE LIFTER ASSEMBLY	

No.	CODE	NAME	REMARKS
45	XC7738051	LIFTER BASE	
46	XC7739051	SHAFT	
47	XA6215251	SPRING,PLATE	
48	060260316	SCREW BIND M2.6X3	
49	X51383050	WASHER,THRUST	
50	XC7740051	LIFTER LINK	
51	XA6252051	SCREW	
52	028040242	WASHER SPRING 2-4	
53	026040236	WASHER PLAIN M 4	
54	XC7741051	SPRING	
55	XC8208051	ASSY:KNEE LIFTER SENSOR	
56	XA6493051	PT LEVER	
57	012300632	SET SCREW SOCKET (FT) M3X6	
58	XC7742051	SPRING	
59	026060235	WASHER PLAIN M 6	
60	X52569001	NUT	
61	XC7743051	STOPPER PLATE ASSY	
62	0A5400806	SCREW PAN (S/P WASHER) M4X8	
63	XC8624051	KNEE LIFTER SPRING	
64	XC8573051	WASHER,WAVE SPRING	
65	060400616	SCREW BIND M4X6	
66	XC8210051	ASSY,MAIN BODY LEAD WIRE	
67	048030346	RETAINING RING E3	
68	XC7746051	CONNECTOR HOLDER ASSY	
69	XC7632051	INLET ASSY:D6 US (U.S.A., CANADA)	
	XC8419051	INLET ASSY:D6 EU (OTHER)	
70	XC8902051	FERRITE CORE:E04SR200935A (U.S.A., CANADA)	
71	T31049001	COATING CLIP CS-6	
72	060300616	SCREW BIND M3X6	
73	060400616	SCREW BIND M4X6	
74	X57908051	TAPTITE,BIND S M4X10	
75	XC7687051	ACCESSORY TABLE	
76	XD0698051	ACC TABLE F COVER SUPPLY ASSY	
77	XC7689051	ACCESSORY TABLE REAR COVER	
78	138644051	NOTCHED SPRING	
79	XC8155151	SPONGE	
80	XC7750151	CASE ASSEMBLY	
81	XC8184150	UNDER CASE POLYSTYRENE L	
82	XC8183150	UNDER CASE POLYSTYRENE R	
83	XA3028052	DECORATION PLATE	
84	XC8378051	CASE COVER	
85	XC8613051	BAG.900X600H	
86	125440050	CASE FELT	

(1) PRINCIPAL PARTS

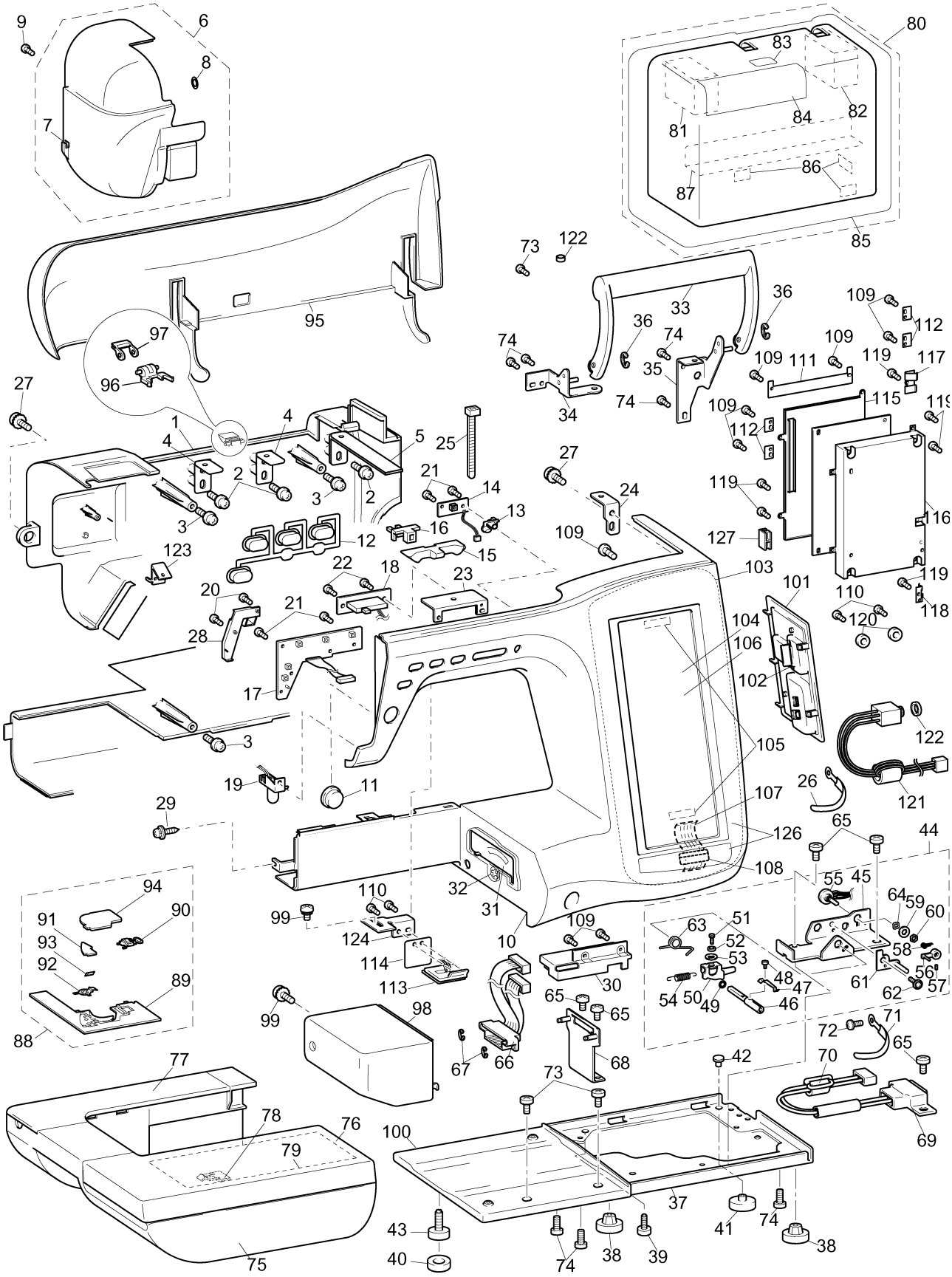

(1) PRINCIPAL PARTS

No.	CODE	NAME	REMARKS
87	XC7253051	SHEET FOR D6 HARDCASE	
88	XC2364052	NEEDLE PLATE B ASSY	
89	XC2365052	NEEDLE PLATE B	
90	XC2366152	SLIDE BUTTON	
91	XC2367052	CUTTER COVER	
92	XC2368051	SPRING PLATE	
93	X80321001	NT LOWER THREAD CUTTER	
94	XC2369051	NEEDLE PLATE COVER	
95	XC7690053	TOP COVER	
96	XZ0391051	UPPER COVER HOLDER	
97	XC3286001	UPPER COVER HINGE OEM	
98	XC7691051	FREE ARM COVER	
99	0A6400806	SCREW PAN (T WASHER) M4X8	
100	XC7692051	BASE PLATE COVER	
101	XC7693151	CARD PCB COVER	
102	XC7756051	PEN HOLDER	
103	XC8669251	LCD MODULE SUPPLY ASSY (NV4000D: U.S.A.)	
	XC8684151	LCD MODULE SUPPLY ASSY (NV4000D: OTHER)	
		Including #104,105,106,109,111,112,125,126	See Next
104	XC8211051	TOUCH PANEL D6	
105	XA6039051	FRONT COVER SPACER B	
106	XC8891151	LCD SUPPLY ASSY (U.S.A.)	
	XC8892151	LCD SUPPLY ASSY (OTHER)	
107	XD1115051	FFC:SML2CD-20X70	
108	XC8660051	FERRITE CORE:FS18X12X5	
109	136681051	TAPTITE, BIND B M3X8	
110	X59629051	TAPTITE,BIND B M3X10	
111	XC7840051	LCD PRESSER A	
112	XC7850051	LCD PRESSER B	
113	XD0504051	LED LAMP UNIT WORK AREA D6	
114	XC7759051	INSULATION SHEET	
115	XC7761051	BOARD CASE UPPER	
116	XC7762051	BOARD CASE LOW	
117	XC8533051	GROUND PLATE UPPER	
118	XC8534051	GROUND PLATE LOW	
119	060300516	SCREW BIND M3X5	
120	XC4543051	BOARD PRESSER	
121	XC8668051	FC JACK SUPPLY ASSY	
122	X51271001	NUT	
123	XC8430051	ADJUST PLATE A	
124	XC8431051	ADJUST PLATE B	
125	XC9233051	BADGE ASSEMBLY (NV4000D)	
126	XC7694053	LCD HOLDER (NV4000)	

No.	CODE	NAME	REMARKS
127	XD0976050	PCB HOLDER	050200

(1) PRINCIPAL PARTS

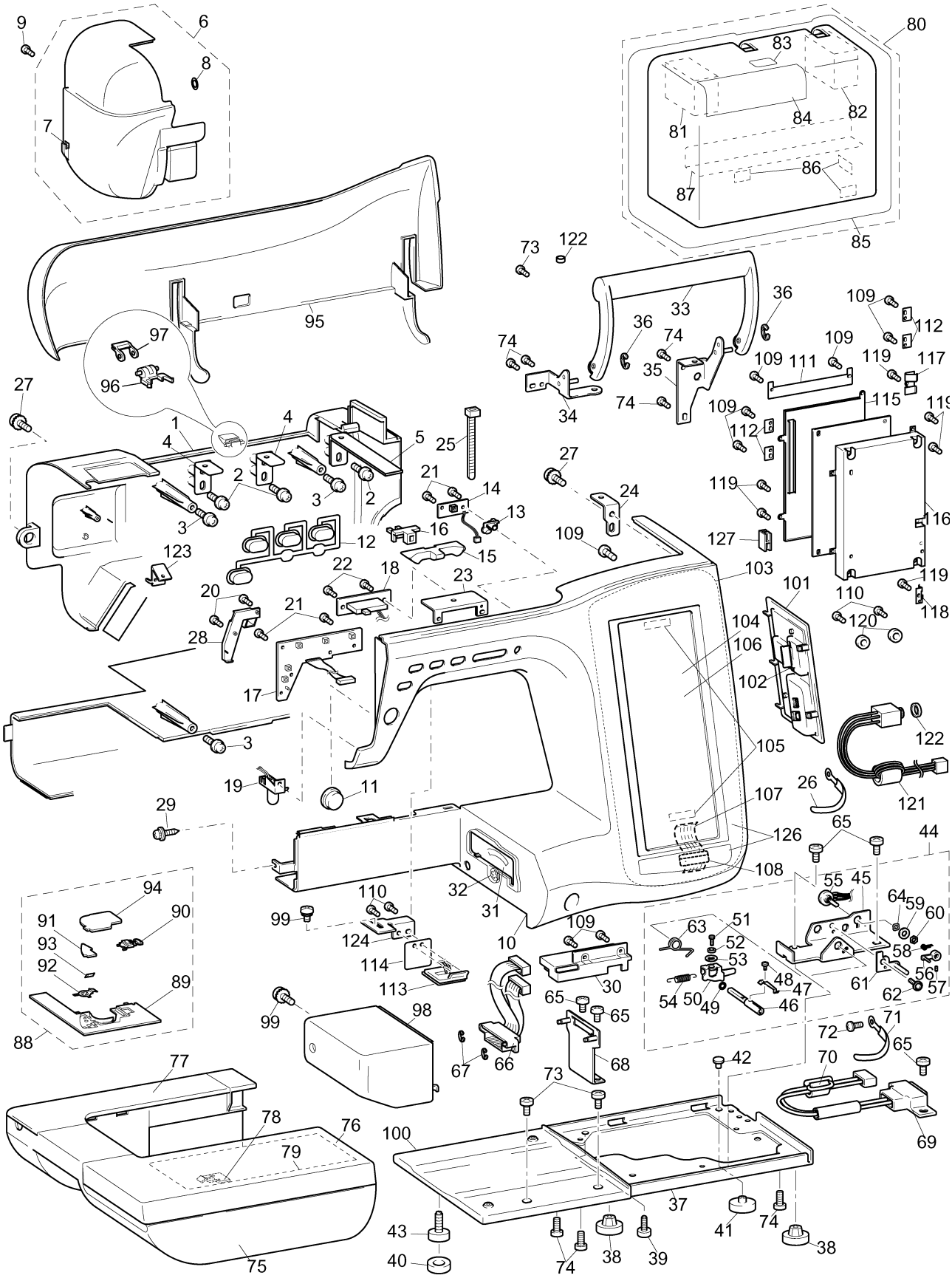

LCD SUPPLY ASSEMBLY

No.	CODE	NAME	REMARKS
1	XC8669251	LCD MODULE SUPPLY ASSY (NV4000D: U.S.A.)	
	XC8684151	LCD MODULE SUPPLY ASSY (NV4000D: OTHER)	
2	XC9233051	BADGE ASSEMBLY (NV4000D)	
	XC7694053	LCD HOLDER (NV4000)	
3	XC8891151	LCD SUPPLY ASSY (U.S.A.)	
	XC8892151	LCD SUPPLY ASSY (OTHER)	
4	XC8211051	TOUCH PANEL D6	
5	XA6039051	FRONT COVER SPACER B	
6	136681051	TAPTITE, BIND B M3X8	
7	XC7840051	LCD PRESSER A	
8	XC7850051	LCD PRESSER B	

LCD SUPPLY ASSEMBLY

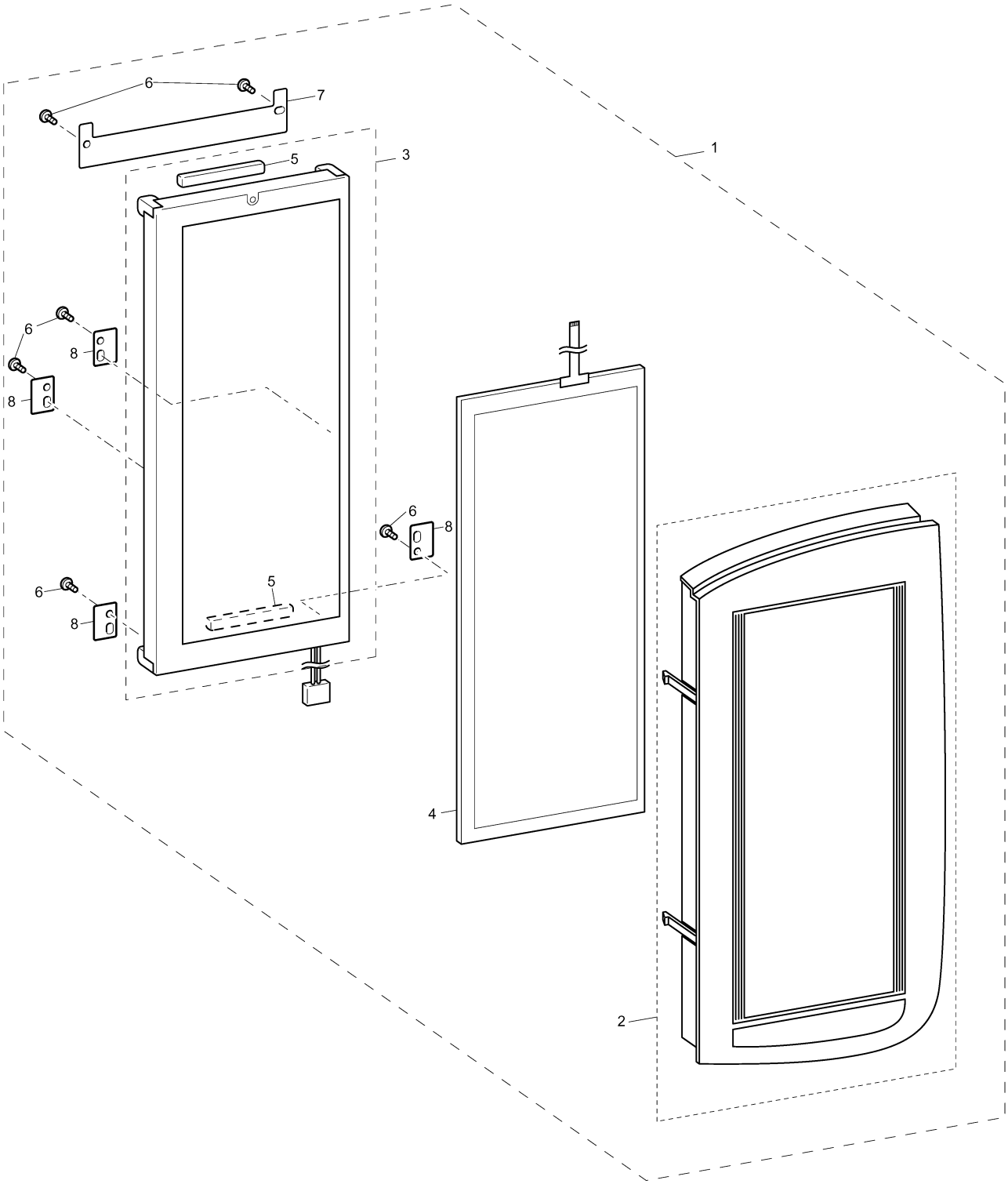

(2) UPPER SHAFT / NEEDLE BAR, PRESSER MECHANISM

No.	CODE	NAME	REMARKS
		UPPER SHAFT MECHANISM	
1	XC8679151	UPPER SHAFT SUPPLY ASSY	
2	048080346	RETAINING RING E8	
3	021300205	NUT 2 M3	
4	014300632	SET SCREW SOCKET (CP) M3X6	
5	XC7775051	FIXED JOINT	
6	012500532	SET SCREW SOCKET (FT) M5X5	
7	X52478051	BUSHING PRESSER	
8	X57908051	TAPTITE,BIND S M4X10	
9	XC7776051	TIMING BELT 440-5GT-6	
10	XC2385051	TENSION PULLEY ASSEMBLY	
11	0A5401005	SCREW PAN (S/P WASHER) M4X10	
12	XC8336051	UPPER SHAFT COVER	
13	060400616	SCREW BIND M4X6	
14	XC8219051	ASSY:NP PCB-D6	
15	136681051	TAPTITE, BIND B M3X8	
16	XC7777051	PCB HOLDER	
17	060400816	SCREW BIND M4X8	
18	014400432	SET SCREW SOCKET (CP) M4X4	
19	XC3183051	FELT	
20	XC7772051	PULLEY	

No.	CODE	NAME	REMARKS
		NEEDLE BAR, PRESSER MECHANISM	
21	XC2505050	PLATE SPRING	
22	060400516	SCREW BIND M4X5	
23	XC2297051	PRESSER PLATE A	
24	XC2298051	PRESSER PLATE B	
25	XC2503051	SHAFT	
26	XZ0380051	SCREW, PAN (WASHER) M3X18	
27	X57908051	TAPTITE,BIND S M4X10	
28	XC2504050	ADJUSTING SCREW	
29	XC8019051	PCB UNIT:LED LAMP-D6L	
30	048050346	RETAINING RING E5	
31	XZ0149051	TAPTITE,PAN B 4X12	

(2) UPPER SHAFT / NEEDLE BAR, PRESSER MECHANISM

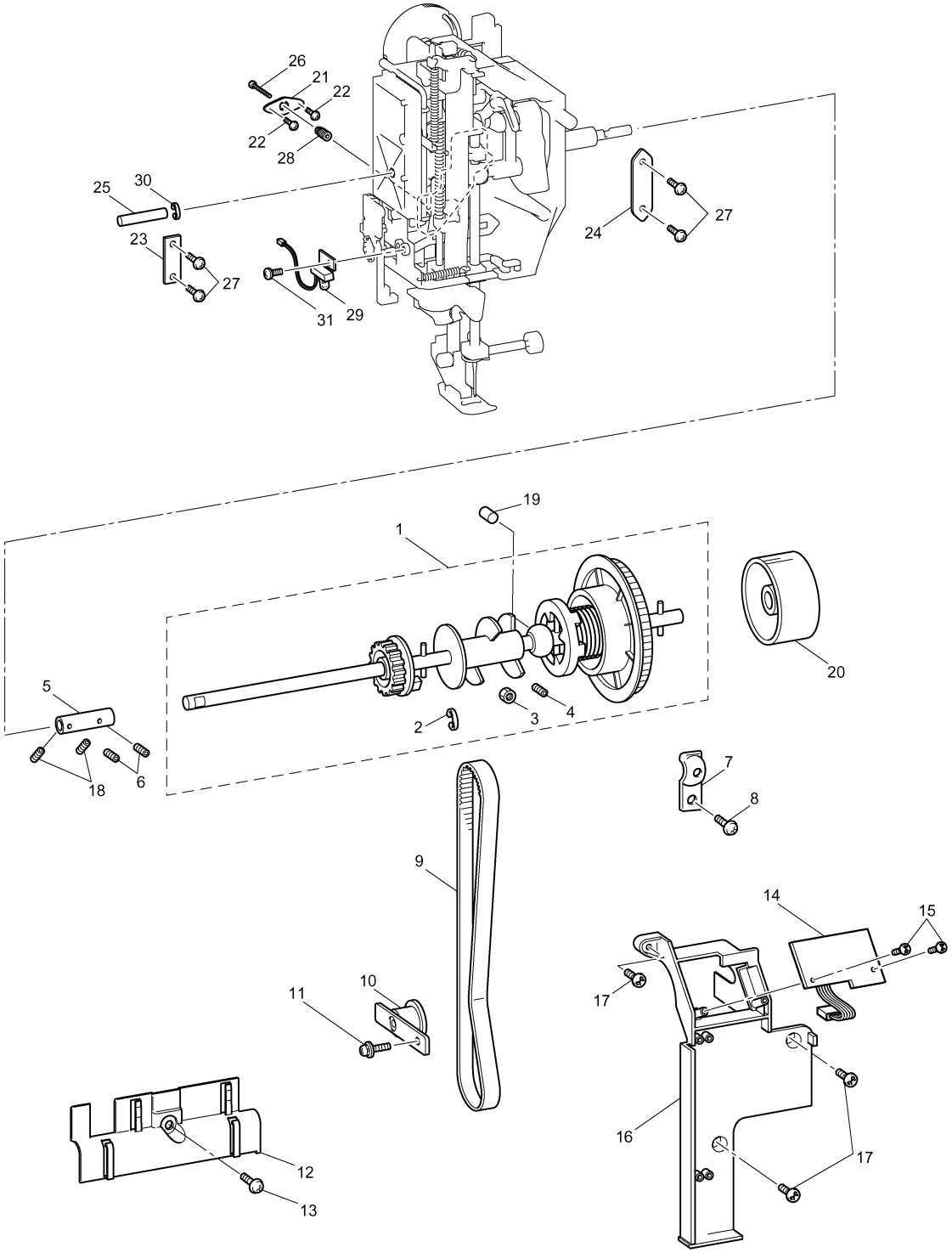

(3) FEED, ROTARY HOOK / SIDE FEED / THREAD CUTTING MECHANISM

No.	CODE	NAME	REMARKS
		FEED, ROTARY HOOK MECHANISM	
1	XC3153151	INNER ROTARY HOOK ASSY	
2	X52800150	BOBBIN	
3	060300416	SCREW BIND M3X4	
4	XC3096051	SCREW M4	
5	XC7876051	LEAD WIRE GUIDE HOLDER	
6	XZ0160051	SHEET	
7	XC7878051	DROP COVER	
8	X53169050	BAND	
		SIDE FEED MECHANISM	
9	X57908051	TAPTITE,BIND S M4X10	
10	XA2189050	RUBBER	
11	XA2401050	WASHER	
12	XA9506051	SIDE FEED GEAR	
13	XA9507050	SIDE FEED WASHER	
14	XA9508051	SPRING,EXTENSION	
15	048030346	RETAINING RING E3	
16	XA9514051	SPRING,PLATE A	
17	060300616	SCREW BIND M3X6	
18	XC0411051	S STOPPER	
19	XC8242051	ASSY:S PULSE MOTOR	
20	XC8243051	ASSY:SPM LEAD WIRE	
21	060300416	SCREW BIND M3X4	
22	XC6258051	SIDE FEED PLATE	
23	XC8418051	SPM HOLDER ASSY	
24	XC6259051	SIDE FEED ARM ASSY	
25	XC6263051	SIDE FEED ADJUST PLATE	
26	XC6264051	SPRING,PLATE B	
27	XA8390051	SCREW	
28	T31049001	COATING CLIP CS-6	

No.	CODE	NAME	REMARKS
		THREAD CUTTING MECHANISM	
29	XC8329151	PHOTO TRANSISTOR ASSY	
30	XC9199051	SENSOR HOLDER	
31	0A4300605	SCREW PAN (S/P WASHER) M3X6	
32	060400516	SCREW BIND M4X5	
33	060300516	SCREW BIND M3X5	
34	X53169050	BAND	

(3) FEED, ROTARY HOOK / SIDE FEED / THREAD CUTTING MECHANISM

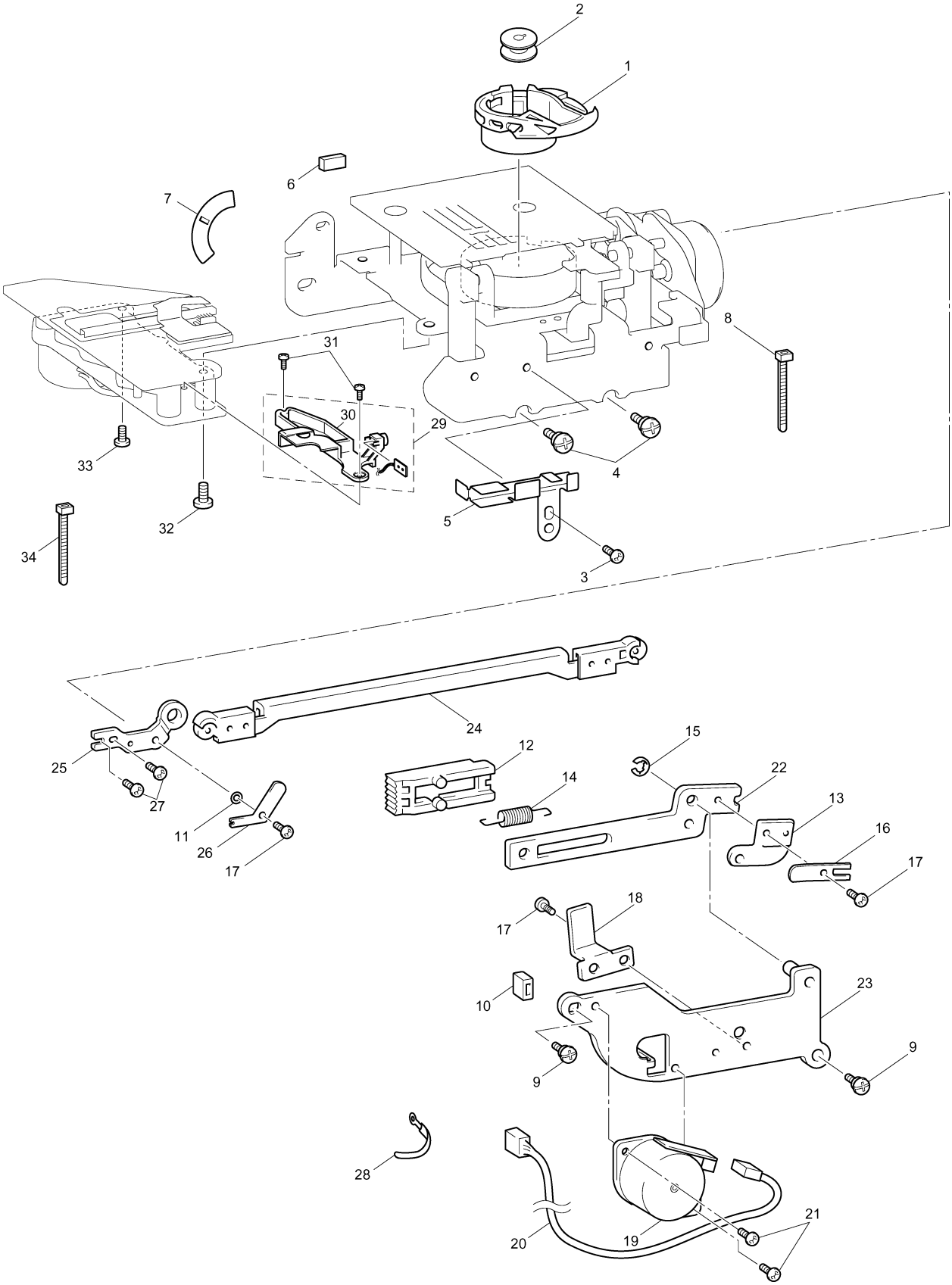

(4) ROTARY HOOK DRIVE / BOBBIN WINDER MECHANISM

No.	CODE	NAME	REMARKS
		ROTARY HOOK DRIVE MECHANISM	
1	XC7890051	LOWER SHAFT A	
2	XC2601051	TIMING PULLEY D	
3	014500532	SET SCREW SOCKET (CP) M5X5	
4	X52664050	LOWER SHAFT BUSHING	
5	X51383050	WASHER,THRUST	
6	048060346	RETAINING RING E6	
7	137768151	SET SCREW COLLAR	
8	014400432	SET SCREW SOCKET (CP) M4X4	
9	XC2602051	JOINT	
10	012500532	SET SCREW SOCKET (FT) M5X5	
11	XC2602051	JOINT	
12	012500532	SET SCREW SOCKET (FT) M5X5	
13	132421051	BUSHING PRESSER	
14	X57908051	TAPTITE,BIND S M4X10	
15	XC2603050	DISK	
16	XC3183051	FELT	

No.	CODE	NAME	REMARKS
		BOBBIN WINDER MECHANISM	
17	XC7696051	UPPER COVER	
18	XC7894051	BOBBIN WINDER HOLDER ASSY	
19	XC7898051	BW MOTOR ASSY	
20	125928050	BOBBIN WINDER SHAFT SPRING	
21	XC7902051	BOBBIN PRESSURE	
22	XC7903051	BOBBIN PRESSURE GUIDE ASSY	
23	137999050	POLYESTER SLIDER	
24	048030346	RETAINING RING E3	
25	XA9545051	SPRING	
26	XC8254051	ASSY:BWSW D6	
27	XC8194051	BW SWITCH HOLDER	
28	XC6055051	SCREW, BIND M3X3	
29	XC8371051	BOBBIN PRESSER COVER	
30	136681051	TAPTITE, BIND B M3X8	
31	137947001	CLIP	
32	XC7905051	TENSION GUIDE ASSY	
33	0A4300806	SCREW PAN (S/P WASHER) M3X8	
34	XC7907051	THREAD GUIDE PLATE	
35	XC7908051	SUB SPOOL STAND PIN	
36	XC7909051	SUB SPOOL PIN HOLDER	
37	XC7910051	NOTCH PLATE	
38	XA9371051	SHAFT	
39	XC6055051	SCREW, BIND M3X3	
40	XA1786053	SPOOL PIN	
41	X55260153	SPOOL PRESSER C	
42	XC7911051	SPOOL PIN HOLDER B ASSY	
43	136681051	TAPTITE, BIND B M3X8	
44	085411015	TAPTITE BIND B M4X10	
45	XC7912051	BOBBIN BASE ASSY	
46	X80321001	NT LOWER THREAD CUTTER	
47	XC7914051	BOBBIN THREAD CUTTER HOLDER	
48	XC8432051	THREAD GUARD PLATE	
49	087310816	TAPTITE CUP B M3X8	
50	060400516	SCREW BIND M4X5	
51	060400616	SCREW BIND M4X6	
52	XD0597051	BOBBIN WINDER SUPPLY ASSY	

(4) ROTARY HOOK DRIVE / BOBBIN WINDER MECHANISM

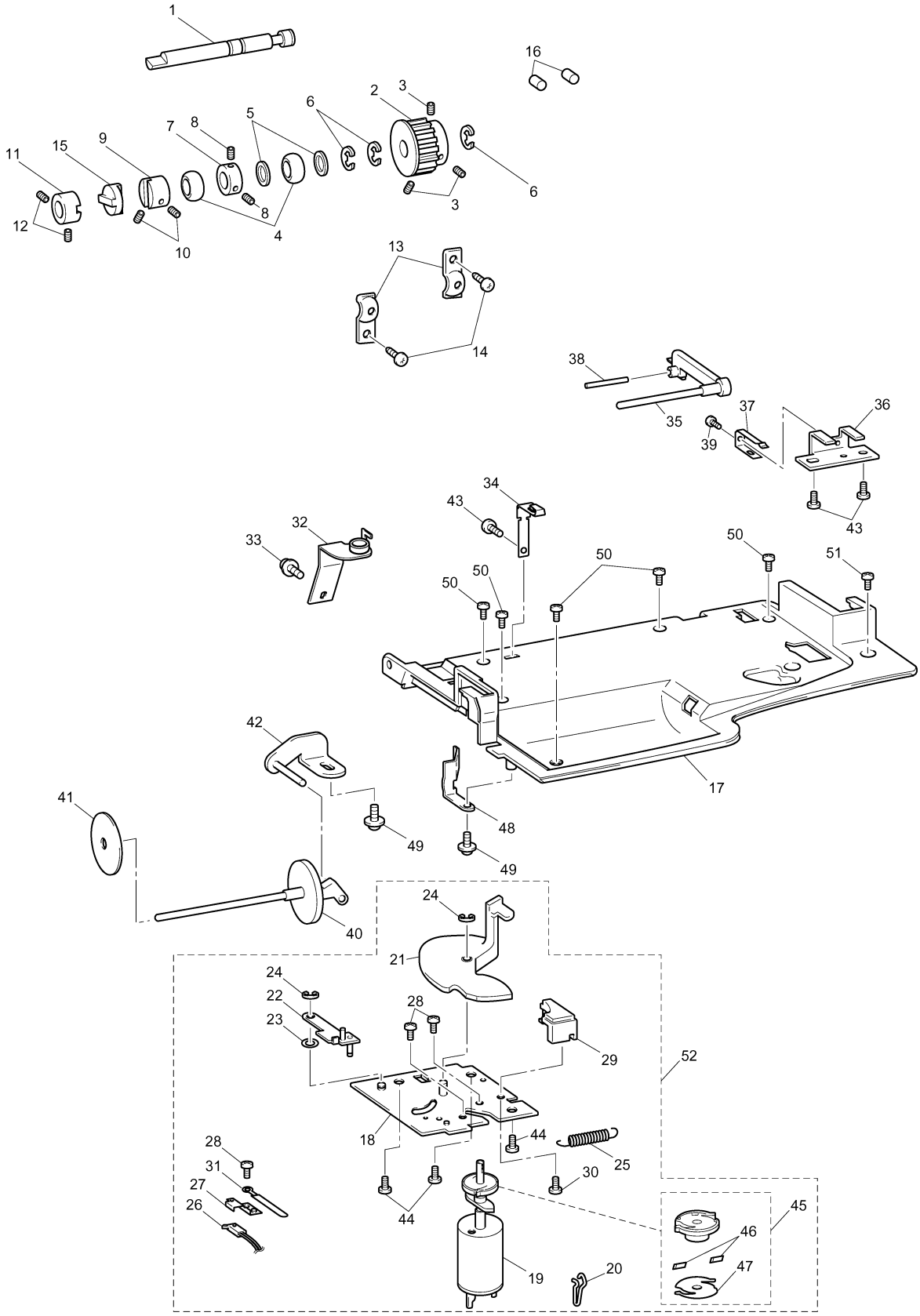

(5) THREAD GUIDE MECHANISM / THREAD HOOK MECHANISM

No.	CODE	NAME	REMARKS
		THREAD GUIDE MECHANISM	
1	XC7917151	THREAD GUARD ASSEMBLY	
2	XA0083051	TENSION DISC A	
3	XC2626051	TENSION DISC B	
4	XC3437051	TENSION ADJUSTING SCREW	
5	XA1388051	TENSION DISC WASHER	
6	XC7920051	TENSION RELEASE PLATE ASSY	
7	XA9900051	THREAD TENSIONSPRING	
8	XD0573051	WASHER	
9	XA9562051	TENSION PLATE ASSY	
10	XC7922050	THREAD TENSION CAM	
11	048030346	RETAINING RING E3	
12	XC7923051	THREAD TENSION GEAR COVER	
13	XA9935050	SPRING TAPE	
14	X57605051	SPRING	
15	048020346	RETAINING RING E2	
16	026030136	WASHER PLAIN S 3	
17	XC7925051	TENSION RELEASE HOLDER ASSY	
18	XA9571051	TENSION RELEASER LINK	
19	048030346	RETAINING RING E3	
20	XC2638051	TENSION PRESSURE ASSY	
21	XC9115051	TENSION PLATE	
22	XC7927051	SPACER	
23	XA9577051	SPRING	
24	XC2640051	TENSION RELEASE CAM	
25	012300432	SET SCREW SOCKET (FT) M3X4	
26	X57363051	POWER LOCK 2X3	
27	X57605051	SPRING	
28	048020346	RETAINING RING E2	
29	XC7928051	THREAD GUIDE	
30	XZ0386051	THREAD TAKE UP SPRING	
31	0A4301806	SCREW, PAN (S/P WASHER) M3X18	
32	XC7929050	PRESSER SW LINK	
33	048030346	RETAINING RING E3	
34	XC7930051	SPRING	
35	XC7931050	THREAD GUIDE WIRE	
36	XA9996051	WASHER,PLAIN	
37	XC7564051	SCREW, PAN(S/P WASHER)M3X6	
38	060300416	SCREW BIND M3X4	
39	XC7932051	PRESSER SWITCH HOLDER	
40	XC8256051	ASSY:PFSW D6	
41	XD0804051	ATPM INSULATION ASSY	
42	XC8259051	ASSY:ATPM LEAD WIRE	
43	XC7933051	ATPM SENSOR PLATE	

No.	CODE	NAME	REMARKS
44	XC8260051	ASSY:AT INIT PCB	
45	X58316051	THREAD CUTTING SHUTTER	
46	XA9585151	THREAD CATCHING SPRING CASE	
47	XC8262051	ASSY:UPTHREAD PCB	
48	XC7934051	THREAD SENSOR HOLDER	
49	X53169050	BAND	
50	XC7941051	THREAD GUIDE BASE	
51	XC7942051	BELT GUIDE	
52	XC7943051	THREAD HOOK	
53	XC7944050	THREAD HOOK SLIDER	
54	XC7945050	ROLLER	
55	XC7948051	BELT 20S2M264	
56	XC7949051	TGPM HOLDER SUB ASSY	
57	XC7952050	IDLE GEAR	
58	XC8267051	ASSY:TG PULSE MOTOR	
59	XC7954050	TGPM COVER	
60	XC7955050	DRIVING PULLEY	
61	XC8572050	BRAKE PLATE	
62	X57605051	SPRING	
63	048020346	RETAINING RING E2	
64	XC7947050	INITIAL SW HOLDER	
65	XC8265051	ASSY:TGSW D6	
66	137947001	CLIP	
67	XC9271051	INSULATION SHEET FOR TGPM	
68	060300516	SCREW BIND M3X5	
69	060300616	SCREW BIND M3X6	
70	026030136	WASHER PLAIN S 3	
71	XD0707050	GUARD PLATE	
72	085411015	TAPTITE BIND B M4X10	
73	XC7936153	FRONT THREAD GUARD COVER	
74	0A5300606	SCREW, PAN (S/P WASHER) M3X6	
75	XC8412151	THREAD GUIDE COVER A ASSY	
76	XC8414051	THREAD HOLD PLATE	
77	XC8935051	SPRING, COMPRESSION	
78	XC8949051	WASHER 2.1X8	
79	083210615	TAPTITE PAN B M2X6	
80	XC8411051	CUTTER HOLDER	
81	X80321001	NT LOWER THREAD CUTTER	
82	085310616	TAPTITE BIND B M3X6	
83	XC8574151	PILE	
84	XD1019051	THREAD UNIT D6 SUPPLY ASSY (U.S.A., CANADA)	
	XD1019052	THREAD UNIT D6 SUPPLY ASSY (OTHER)	

(5) THREAD GUIDE MECHANISM / THREAD HOOK MECHANISM

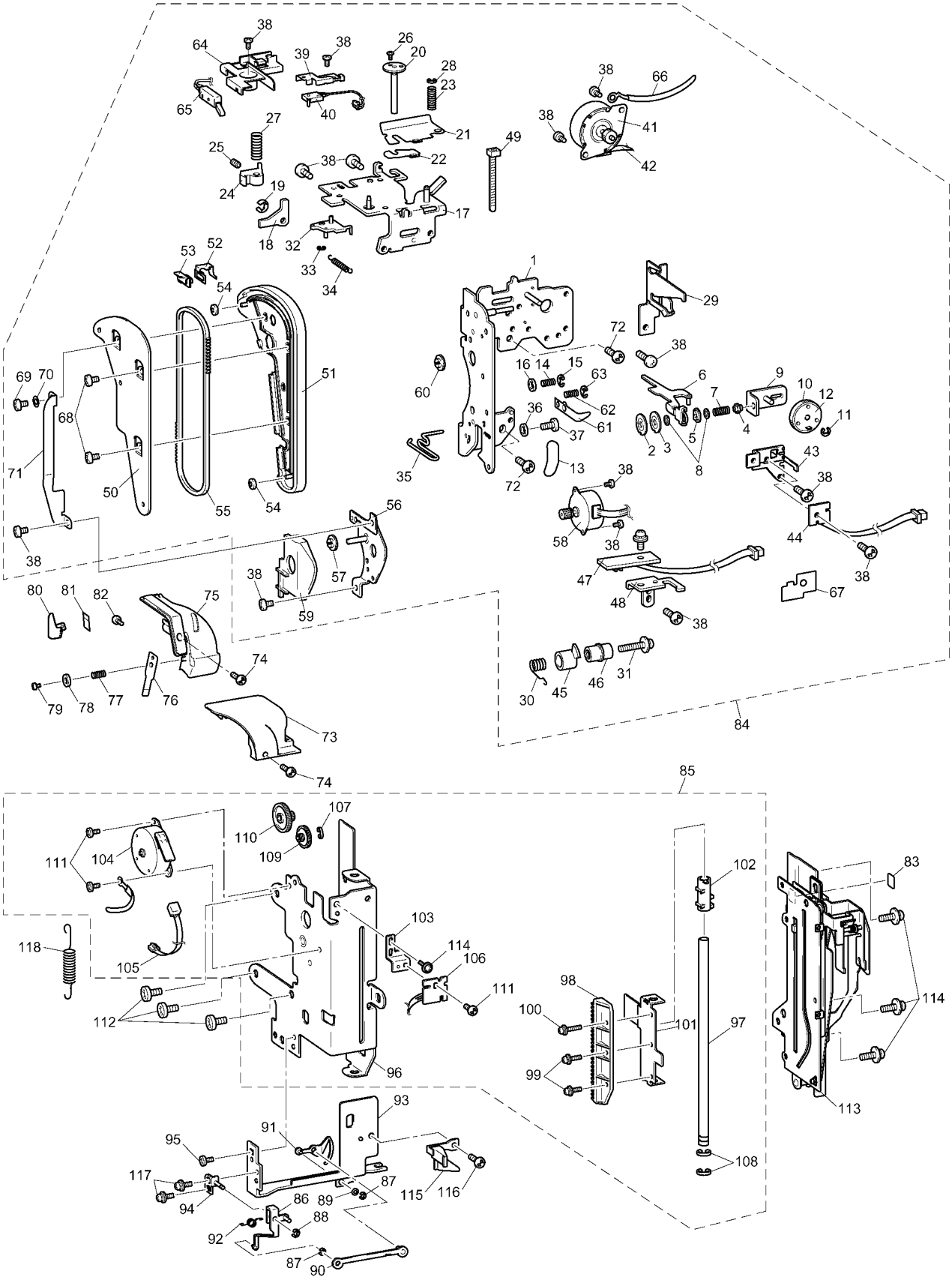

(5) THREAD GUIDE MECHANISM / THREAD HOOK MECHANISM

No.	CODE	NAME	REMARKS
85	XD1021051	THREAD DRIVE UNIT SUPPLY ASSY (U.S.A., CANADA)	
	XD1021052	THREAD DRIVE UNIT SUPPLY ASSY (OTHER)	
		THREAD HOOK MECHANISM	
86	XC7958051	LINK PLATE A ASSY	
87	048020346	RETAINING RING E2	
88	048030346	RETAINING RING E3	
89	XZ0399051	WASHER	
90	XC7962051	LINK PLATE B ASSY	
91	XC7964051	THREAD GUIDE PLATE ASSY	
92	XC7966051	SPRING	
93	XC7967051	THREAD GUIDE BASE PLATE	
94	XC7968051	LINK A BASE ASSY	
95	060300616	SCREW BIND M3X6	
96	XC7972051	UNIT ASSY	
97	XC7976051	GUIDE SHAFT	
98	XC7977050	RACK	
99	0A4300806	SCREW PAN (S/P WASHER) M3X8	
100	0A4301206	SCREW PAN (S/P WASHER) M3X12	
101	XC7978051	SLIDER	
102	XC7979050	TRIGGER	
103	XC7980051	SENSOR HOLDER	
104	XC9289051	THPM INSULATION ASSY	
105	XC8268051	ASSY:THPM LEAD WIRE	
106	XC8269051	ASSY:ATTHD INIT PCB	
107	048025346	RETAINING RING E2.5	
108	048030346	RETAINING RING E3	
109	XC7982050	IDLE GEAR A	
110	XC7983050	DRIVE GEAR A	
111	060300416	SCREW BIND M3X4	
112	085411015	TAPTITE BIND B M4X10	
113	XC9250151	THREAD GUIDE BASE SUPPLY ASSY	
114	XC7644051	SCREW, PAN (S/P WASHER) M3X5	
115	XC8609051	PILE HOLDER ASSY	
116	008300404	SCREW TRUSS M3X4	
117	0A4300605	SCREW, PAN (S/P WASHER) M3X6	
118	X52005151	SPRING	

(5) THREAD GUIDE MECHANISM / THREAD HOOK MECHANISM

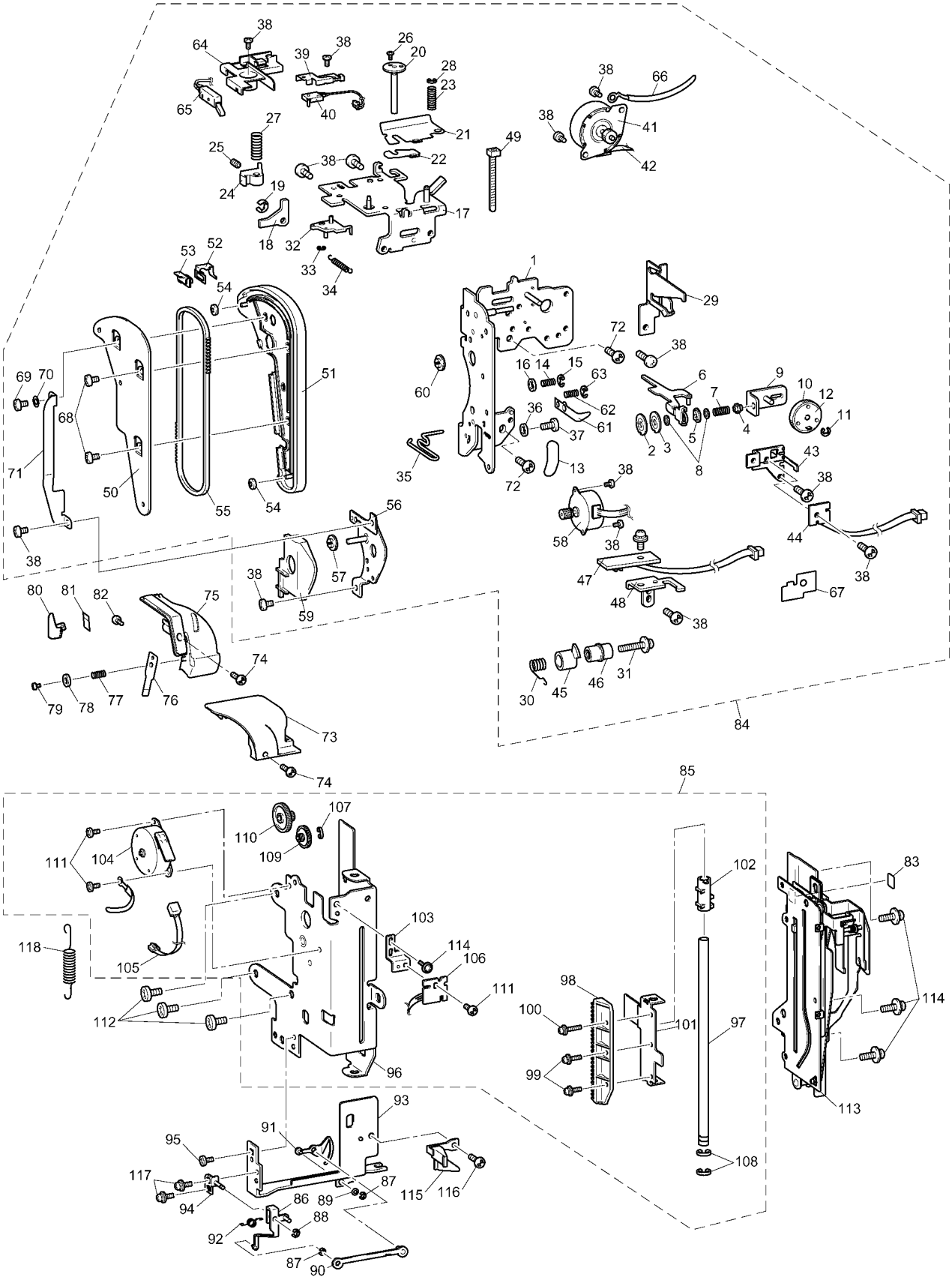

(6) ELECTRONIC PARTS / MOTOR UNIT

No.	CODE	NAME	REMARKS
		ELECTRONIC PARTS	
1	XC8675051	SUPPLY ASSY:MAIN PCB	
2	136681051	TAPTITE, BIND B M3X8	
3	060300616	SCREW BIND M3X6	
4	XC8676051	SUPPLY ASSY:PANEL PCB B	
5	XC8288051	MAIN-PANEL LEAD WIRE A	
6	XC8289051	MAIN-PANEL LEAD WIRE B	
7	XC8290051	INVERTER :D6	
8	XC8291051	INVERTER LEAD WIRE	
9	XC8292051	POWER SUPPLY UNIT, D6US (U.S.A., CANADA)	
	XC8352051	POWER SUPLY UNIT, D6EU (OTHER)	
10	XC7630051	ASSY:POWER SWITCH D6	
11	XZ0389051	INSULATOR SHEET S	
12	XC7568051	SCREW, PAN(S/P WASHER)M4X14	
13	137947001	CLIP	
14	X53169050	BAND	
15	XC5069051	SPIRAL TUBE A	
16	T31049001	COATING CLIP CS-6	

No.	CODE	NAME	REMARKS
		MOTOR UNIT	
17	XA9644050	T BELT	
18	XC8294051	ASSY:MAIN MOTOR	
19	XC8027051	MOTOR HOLDER	
20	XA9649050	FENDER RUBBER	
21	XA9650051	MOTOR SPACER PRESSER	
22	XC0443051	SPACER 4X7	
23	052401605	SCREW, PAN (S/P WASHER) M4X16	
24	XC6481051	MOTOR CAP	
25	XC5763051	MOTOR HOLDER SPACER	
26	XA8474051	UPSET 4X12 DB	
27	XA9652150	MOTOR FAN	
28	XD0500051	FOOT CONTROLLER : FC-321-LF-EU (AUSTRALIA)	
	XC8028051	FOOT CONTROLLER : FC-321-81-LF (OTHER)	
29	XC8029051	PCB HOLDER R	

(6) ELECTRONIC PARTS / MOTOR UNIT

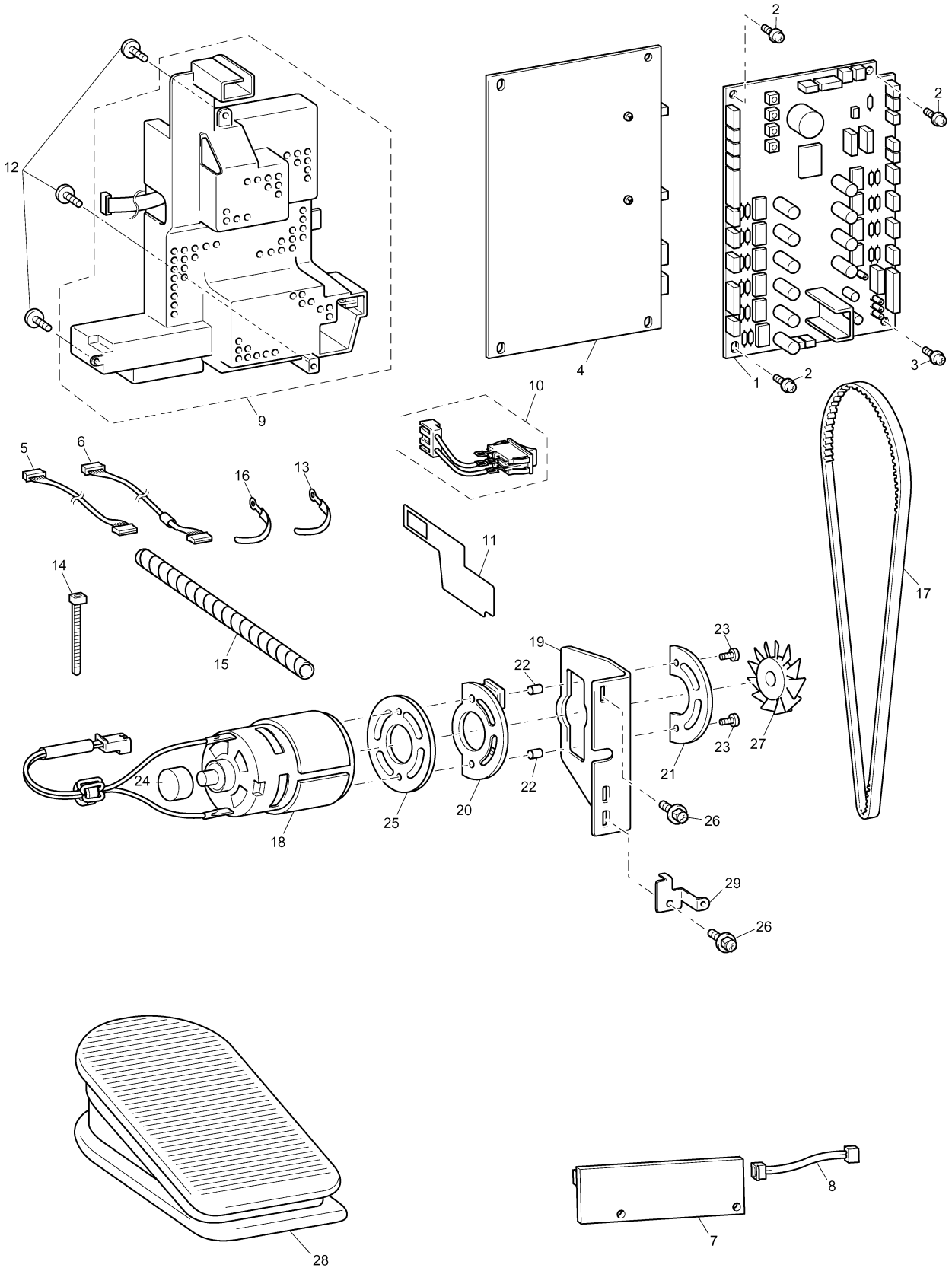

(7) EMBROIDERY UNIT

No.	CODE	NAME	REMARKS
1	XC8035051	MAIN FRAME SUB ASSY	
2	XC8038050	DRIVING PULLEY	
3	XC8039050	DRIVING GEAR	
4	XC8298051	ASSY:XY PULSE MOTOR	
5	XC8299051	ASSY:XPM LEAD WIRE	
6	XA8390051	SCREW	
7	XC8041051	TIMING BELT 40S2M530	
8	XC8042051	TENSION PULLEY ASSY	
9	XC8045050	TENSION PULLEY	
10	XC8046051	X GUIDE PLATE	
11	XC8047050	E CODE SUPPORTER	
12	XC7566051	SCREW, PAN(S/P WASHER)M4X8	
13	XC8300051	ASSY:X SENSOR PCB	
14	060300616	SCREW BIND M3X6	
15	X53169050	BAND	
16	XC8303051	ASSY:EMB RELAY PCB	
17	XC8049051	X CARRIAGE UNIT	
18	XC8038050	DRIVING PULLEY	
19	XC8039050	DRIVING GEAR	
20	XC8298051	ASSY:XY PULSE MOTOR	
21	XC8306051	ASSY:YPM LEAD WIRE	
22	XA8390051	SCREW	
23	XC8058050	FFC CODE GUIDE	
24	XC8586050	FFC CODE SUPPORTER	
25	060300616	SCREW BIND M3X6	
26	XC8042051	TENSION PULLEY ASSY	
27	XC8045050	TENSION PULLEY	
28	XC8059051	TIMING BELT 40S2M740	
29	XC8061051	Y SLIDER	
30	XC8062051	YT BELT PRESSER PLATE	
31	XC7566051	SCREW, PAN(S/P WASHER)M4X8	
32	XC8065051	Y CARRIAGE ASSY	
33	XC8068051	Y GUIDE SHAFT	
34	XC8070151	E HOOP STAY PLATE SUB ASSY	
35	XC8074051	E HOOP LOCK LEVER	
36	XC8075051	E HOOP LOCK LEVER SPRING	
37	048040346	RETAINING RING E4	
38	XC8307051	ASSY:FRAME PCB	
39	XC8076051	E HOOP PRESSURE PLATE	
40	XC8077051	E HOOP PRESSURE SPRING A	
41	XC8079051	E HOOP PRESSURE SPRING C	
42	060300416	SCREW BIND M3X4	
43	XA8390051	SCREW	
44	XC8859051	INSULATOR SHEET	

No.	CODE	NAME	REMARKS
45	060400616	SCREW BIND M4X6	
46	XC8080051	STOP RING 10.69	
47	XC8081051	WASHER	
48	XC8082050	WASHER,SPRING 12	
49	085301017	TAPTITE BIND P M3X10	
50	XC8084050	FFC SUPPORT	
51	XC8310051	FLEXIBLE FLAT CABLE:SML2CD-6	
52	060300616	SCREW BIND M3X6	
53	XC8085050	CORD CLIP	
54	XC8311051	ASSY:Y SENSOR PCB	
55	XC8086050	CODE GRIP	
56	XC8087051	X SLIDER	
57	XC7566051	SCREW, PAN(S/P WASHER)M4X8	
58	XC8898051	X GUIDE SHAFT PRESSER PLATE	
59	XC8899050	X GUIDE SHAFT PRESSER	
60	060300416	SCREW BIND M3X4	
61	XC8088051	X BELT PRESSER	
62	XC7566051	SCREW, PAN(S/P WASHER)M4X8	
63	XC7697051	ES BASE COVER	
64	XC8093051	GROOVE COVER	
65	X59853050	RUBBER CUSHION	
66	XC8094051	RUBBER CUSHION COVER	
67	XC8095051	LOCK FINGER	
68	XC8096051	SPRING	
69	XC8097051	LOCK RELEASE LEVER	
70	XC8099051	DROP LEVER SUPPORT ASSY	
71	XC8102051	DROP LEVER CALKING ASSY	
72	XC8105050	NOTCHED CAM	
73	085301017	TAPTITE BIND P M3X10	
74	XC8107051	DROP NOTCHED PLATE	
75	060300616	SCREW BIND M3X6	
76	XC8313051	ASSY,DROP SW	
77	XC8108051	DROP SW HOLDER	
78	XC8106051	DROP KNOB	
79	XA8390051	SCREW	
80	XC8109051	DROP CONNECTION ROD	
81	085301017	TAPTITE BIND P M3X10	
82	XC7566051	SCREW, PAN(S/P WASHER)M4X8	
83	XC8315051	ASSY,EMB UNIT LEAD WIRE	
84	085301615	TAPTITE BIND P M3X16	
85	087411416	TAPTITE CUP B M4X14	
86	X53169050	BAND	
87	XC7566051	SCREW, PAN(S/P WASHER)M4X8	
88	XC8110051	ES MAIN COVER ASSY	

(7) EMBROIDERY UNIT

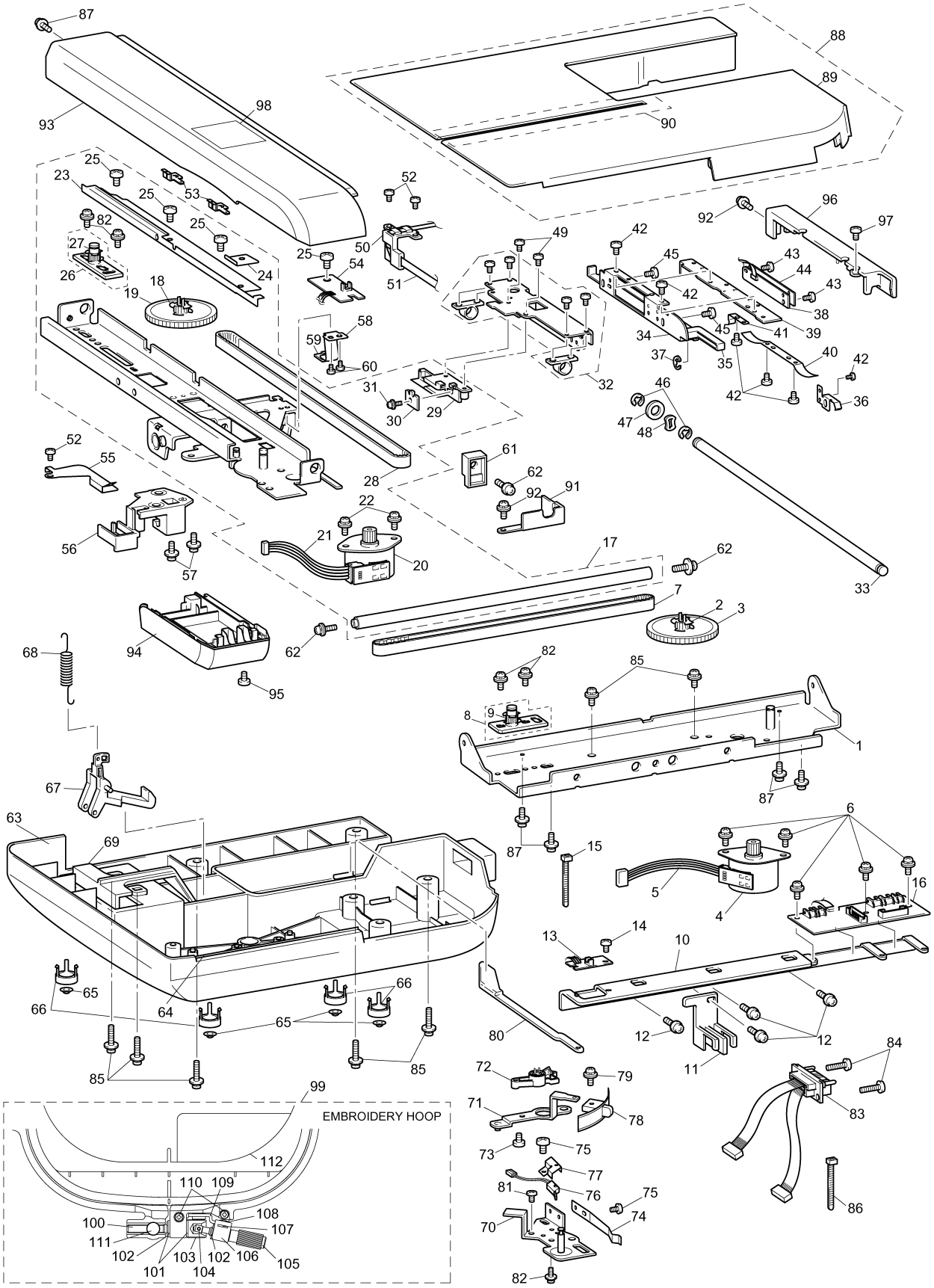

(7) EMBROIDERY UNIT

No.	CODE	NAME	REMARKS	No.	CODE	NAME	REMARKS
89	XC7698051	ES MAIN COVER					
90	XC8093051	GROOVE COVER					
91	XC8112051	XC SUB COVER					
92	XA8390051	SCREW					
93	XC7700051	X CARRIAGE COVER					
94	XC7699051	YPM COVER					
95	085301017	TAPTITE BIND P M3X10					
96	XC8089051	E HOOP STAY COVER					
97	060300416	SCREW BIND M3X4					
98	XC8666051	LOCK LEVER SEAL					
99	XC8115051	EMBROIDERY HOOP ASSY 60D6					
	XC8132051	EMBROIDERY HOOP ASSY 100D6					
	XC8137051	EMBROIDERY HOOP ASSY 130D6					
	XC8142051	EMBROIDERY HOOP ASSY 180D6					
100	XC8118051	THUMB SCREW					
101	026050136	WASHER PLAIN S 5					
102	048040346	RETAINING RING E4					
103	XC8119051	RING					
104	XC8120051	KNOB PIN					
105	XC8121051	KNOB SHAFT					
106	XC8122051	KNOB HOLDER					
107	XC8123051	KNOB FIXED PLATE					
108	060260316	SCREW BIND M2.6X3					
109	XC8124051	HOLDER ASSY					
110	0A4260806	SCREW PAN (S/P WASHER) M2.6X8					
111	XC8129051	OUTER HOOP NUT					
112	XC8355051	EMBROIDERY SHEET 60D6 ASSY					
	XC8357051	EMBROIDERY SHEET 100D6 ASSY					
	XC8359051	EMBROIDERY SHEET 130D6 ASSY					
	XC8147051	EMBROIDERY SHEET 180D6 ASSY					
	XC8150051	CARRYING CASE					
	XD0975051	BUILT IN LID					
	X60439151	BAG,630X630T					
	XC8151051	CARRIAGE PAD A D					
	XC8936051	CARRIAGE PAD B D					
	XC8031051	EMBROIDERY UNIT ASSEMBLY (AUSTRALIA)					
	XC8031061	EMBROIDERY UNIT ASSEMBLY (OTHER)					

(7) EMBROIDERY UNIT

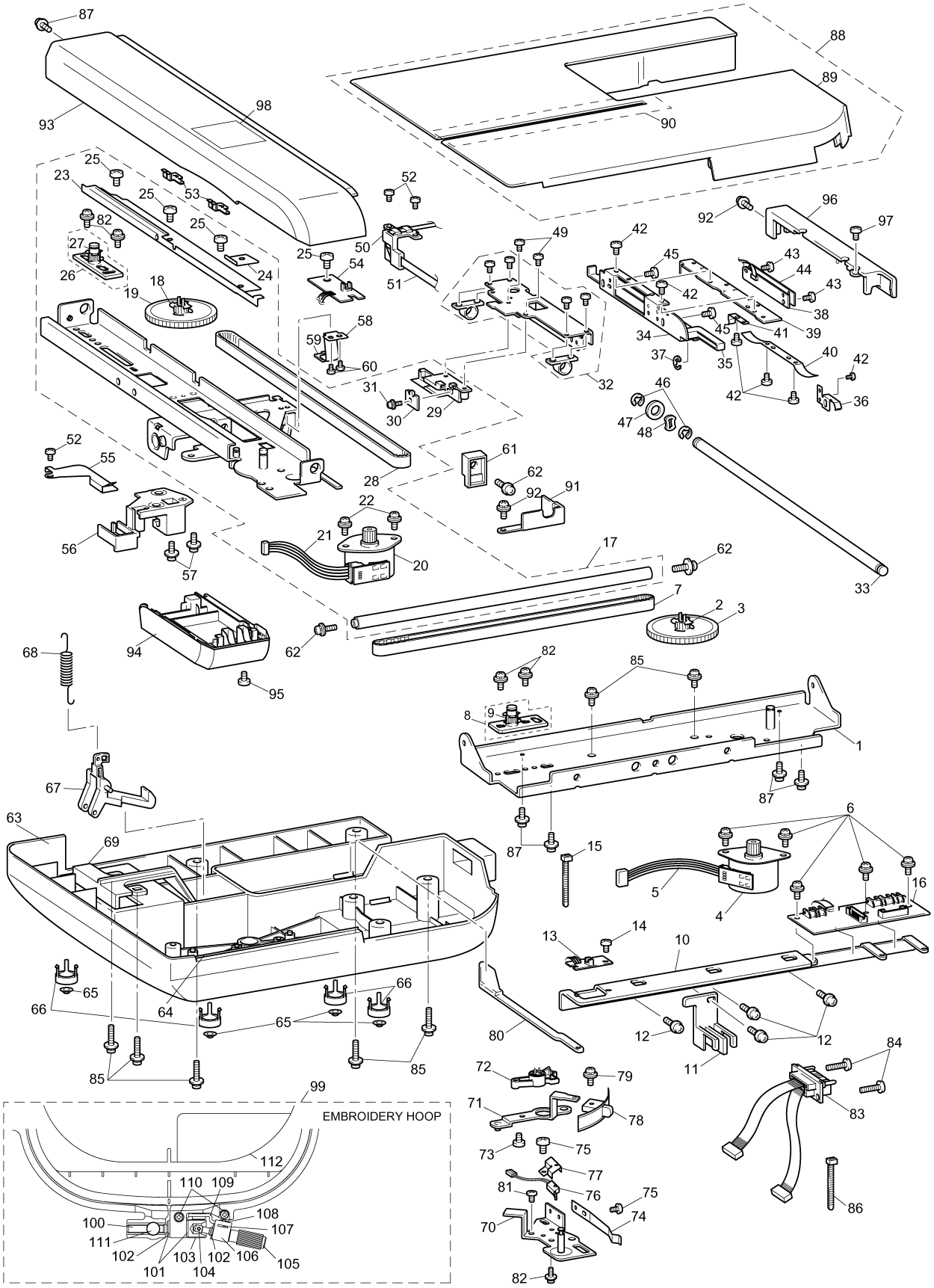

(8) ATTACHMENTS / PACKING MATERIALS / PRINTED MATTER

No.	CODE	NAME	REMARKS
		ATTACHMENTS	
1	XC4487051	ACCESSORY BAG	
2	X57789151	BH PRESSER FOOT	
3	X54243051	SEAM RIPPER	
4	X58358051	Z NEEDLE ASSY	
5	XC1807121	SCISSORS	
6	X52800150	BOBBIN	
7	X59476051	CLEANING BRUSH	
8	XC3098051	OVERCASTING STITCH FOOT ASSY	
9	130012054	SPOOL PRESSER A	
10	X56409051	BLIND STITCH FOOT ASSY	
11	X59370051	ZIPPER FOOT	
12	130013154	SPOOL PRESSER B	
13	XA5523050	NET	
14	X55466051	SCREW DRIVER	
15	X55467051	SCREW DRIVER	
16	X55468051	SCREW DRIVER S	
17	135793001	PUNCH	
18	X53840351	TRANSPARENCY PRESSER FOOT	
19	130489001	BUTTONING FOOT	
20	X55260153	SPOOL PRESSER C	
21	X59296151	TWIN NEEDLE (1PC)	
22	XC7701051	ACCESSORY TRAY	
23	XA4322001	QUILTING FOOT	
24	X59816103	WALKING FOOT ASSRMBLY	
25	XA0188050	BAG	
26	XC8156451	W PRESSER UNIT	
27	XC8167251	INNER ROTARY HOOK ASSY	050212
28	184944001	CHALK PEN	
29	XC1074051	NEEDLE PLATE FIXING METAL	
30	XC3198001	SIDE CUTTER ASSY	
31	XA6941051	KNEE LIFTER LEVER ASSY	
32	XA9940051	TOUCH PEN	
33	XC8619051	EXTRA SPOOL PIN	
34	X57045051	SPOOL FELT	
35	XC6052051	POWER SUPPLY CORD:UL CSA-LF (U.S.A., CANADA)	
	XA0070151	POWER SUPPLY CORD (OTHER)	
	XD0111051	POWER SUPPLY CORD:IRAM (ALZ)	
	XD0225051	POWER SUPPLY CORD:TWN (TAIWAN)	
	XA1291051	POWER SUPPLY CORD (KOREA)	
	X59354151	POWER SUPPLY CORD –BS (U.K.)	
	XC9548051	POWER SUPPLY CORD : SAA-LF (AUS)	
36	XC8897051	USB I/F CORE CABLE	

No.	CODE	NAME	REMARKS
37	XC8362051	STRAIGHT NEEDLE PLATE A ASSY	
38	XA9939051	NEEDLE PLATE COVER	
39	XC8449051	CORD GUIDE COVER	
40	XC8661151	BOBBIN GUIDE SET (U.S.A., TAIWAN)	
	XD0897051	BOBBIN GUIDE SET (CANADA)	
41	XD0835051	BOBBIN GUIDE ASSY (U.S.A. CANADA)	
42	X60838051	BAG,70X110C (U.S.A. CANADA)	
43	XD0826051	STRAIGHT STITCH FOOT	
44	XD0795151	ST FOOT INSERTION	050188
		PACKING MATERIALS	
45	XC8175050	CARTON	
46	XC8176350	POLYSTYRENE FOAM PAD ASSY,BODY	
47	XC8179150	POLYSTYRENE FOAM PAD ASSY,CASE	
48	XC8535051	BAG,800X600T	
49	XC8186050	PAD D	
50	XC9671350	POLYSTYRENE FOAM PAD, ES	
51	XC9562250	OVER CARTON POLYSTYRENE B	
52	XC8617050	CORD PAD D	
53	X57847051	PLUG LABEL (U.K.)	
54	XC9195150	SHUTTLE SUPPORT POLYSTYRENE	
55	XZ0400150	SIDE PAD D	
56	XZ0402050	SHEET, 150X530	
57	XZ0393050	PAD D MIDDLE	
58	XD1001051	REINFORCED CARTON (NV4000D)	
	XD1001054	REINFORCED CARTON (NV4000)	
		PRINTED MATTER	
	XD0784051	INSTRUCTION BOOK ENG	
	XD0785051	INSTRUCTION BOOK FRE	
	XD0786051	INSTRUCTION BOOK GER	
	XD0787051	INSTRUCTION BOOK DUT	
	XD0788051	INSTRUCTION BOOK SPA	
	XD0782051	INSTRUCTION BOOK ITA	
	XD0790051	INSTRUCTION BOOK CHN	
	XC8171051	INSTRUCTION BOOK DISNEY (NV4000D)	
	XC8945051	WARRANTY CARD T (U.S.A.)	
	XC6402051	WARRANTY CARD (U.K.)	
	XA6351151	WARRANTY CARD (ITA)	
	UH3851001	WARRANTY CARD EUR (OTHER)	
	XD0231051	G.LEAFLET 13	
	X81264051	G.LEAFLET NO.24 (NV4000D: GER, U.K., FRA, SPA, ITA, SWISS, SING, AUSTRALIA)	

(8) ATTACHMENTS / PACKING MATERIALS / PRINTED MATTER

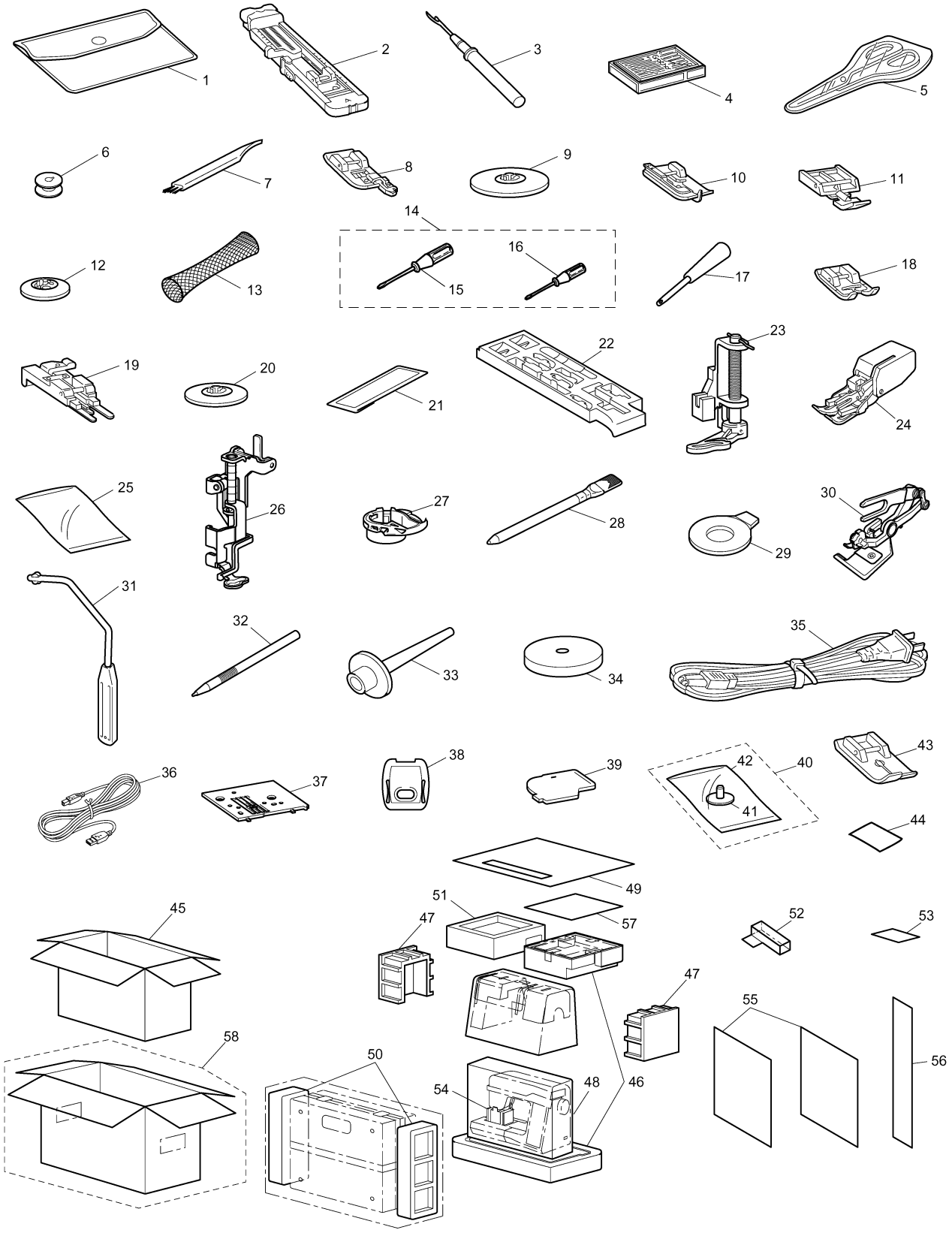

(8) ATTACHMENTS / PACKING MATERIALS / PRINTED MATTER

No.	CODE	NAME	REMARKS
	XD0576051	EMBROIDERY THREAD CATALOG	
	XC7460051	ACCESSORY LEAFLET	
	XC8173051	QUICK REFERENCE GUIDE	
	XC1625051	BOUTIQUE INSERTION	
	181401172	INSERTION WARRANTY COUPON (NV4000D: CANADA)	
	XC9124051	DISNEY CARDS CATALOG 6 (NV4000D: U.S.A.)	
	XC9125051	PACESETTER THREAD SPEC SHEET (NV4000D: U.S.A.)	
	XC8488051	SHEET OF LANGUAGE SETTING D6 (GER, U.K., FRA, AUSTRIA, SPA, ITA, SWISS), (NV4000D: SIN, AUSTRALIA)	
	XD0256051	INSERTION WEEE (GER, U.K., FRA, SPA, ITA, SWI, DEN, EUR)	
	XD0791051	INSTRUCTION CD (NV4000D: DEN)	
	XD1122051	EEU WARRANTY CARD (NV4000)	050199

(8) ATTACHMENTS / PACKING MATERIALS / PRINTED MATTER

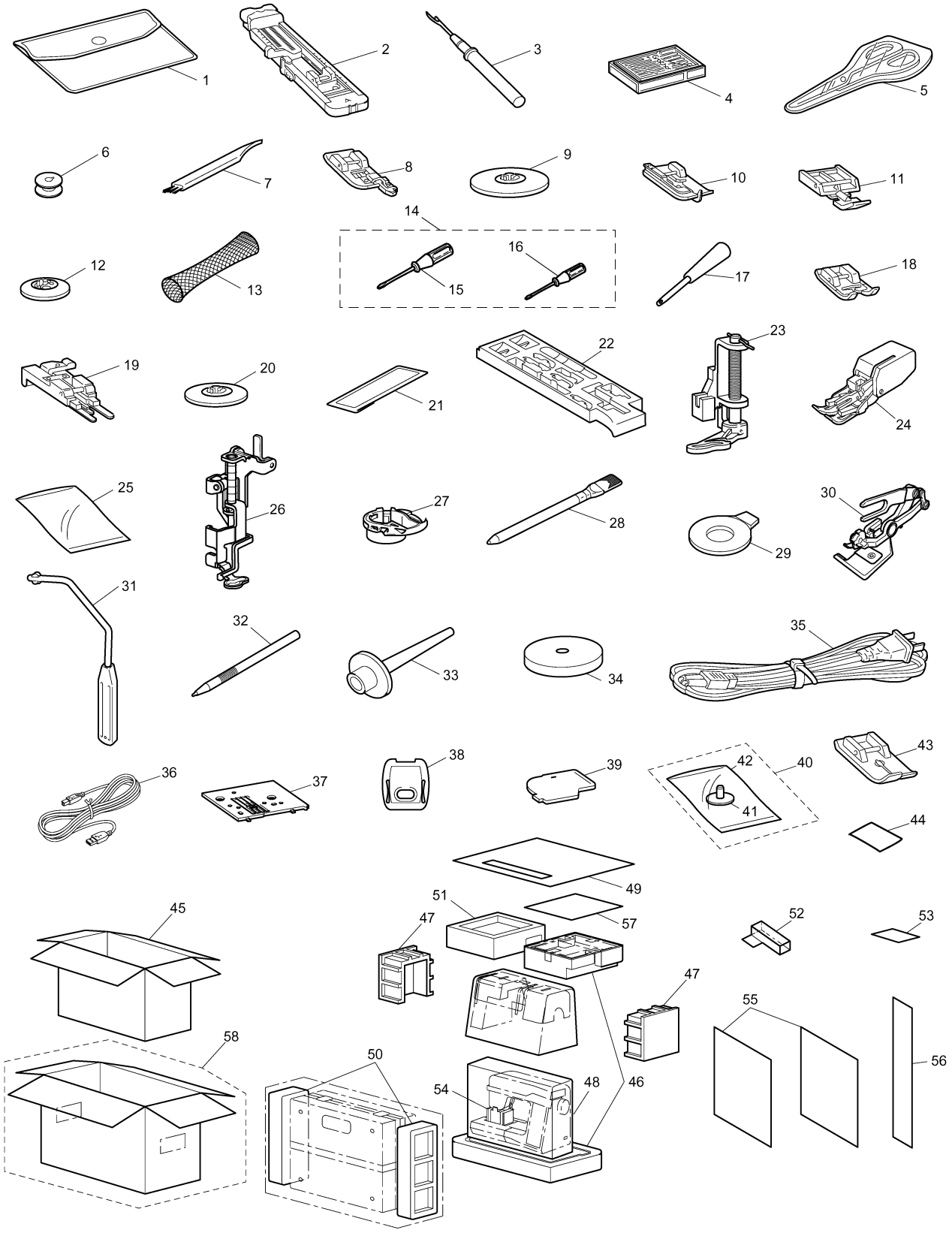

NEEDLE-PRESSER MODULE

No.	CODE	NAME	REMARKS
1	XC8275051	UPPER SHAFT HOLDER ASSY	
2	XC7568051	SCREW, PAN(S/P WASHER)M4X14	
3	XC2398020	SHAFT BUSHING A	
4	XC2399021	PRESSER BAR BUSHING	
5	136681051	TAPTITE, BIND B M3X8	
6	XC5362050	PLATE SPRING	
7	XC7784051	THREAD TAKE-UP COUNTER WEIGHT	
8	012500532	SET SCREW SOCKET (FT) M5X5	
9	XC7785051	UNIT SHAFT	
10	131976050	WASHER,THRUST	
11	048080346	RETAINING RING E8	
12	XC7786051	NEEDLE BAR SUPPORTER ASSY	
13	XC7793051	HOOK RELEASE PLATE	
14	060260516	SCREW BIND M2.6X5	
15	XC3446051	RELEASE LEVER	
16	XC3447051	RELEASE LEVER SHAFT	
17	048025346	RETAINING RING E2.5	
18	XC3448051	RELEASE LEVER SPRING	
19	137977051	POLYESTER SLIDER	
20	0A2300606	SCREW PAN (P WASHER) M3X6	
21	XC8485051	SPRING	
22	XC7794051	HOOK ASSY	
23	XC2419021	SHAFT	
24	000020415	SCREW BIND M2X4	
25	XC2420050	SHAFT	
26	XC2421121	PLATE	
27	060300516	SCREW BIND M3X5	
28	XC7799051	NEEDLE BAR	
29	XC8654051	NEEDLE BAR THREAD GUIDE	
30	X53053052	SCREW SM2.38	
31	XC2426020	NEEDLE THREAD PLATE	
32	XC3554051	NEEDLE BLOCK	
33	XZ0388051	NEEDLE CLAMP SCREW	
34	XC4162021	NEEDLE BLOCK SUPPORTER	
35	XC8655051	SUPPORT SPRING	
36	014401232	SET SCREW SOCKET (CP) M4X12	
37	X56851051	LOCK NUT	
38	XC2429021	SPRING	
39	XZ0394051	NEEDLE BAR CRANK ROD ASSY	
40	132051052	SCREW, FLAT SM3.57-40X7 L	
41	012500532	SET SCREW SOCKET (FT) M5X5	
42	XC2434021	NEEDLE THREAD BLOCK	
43	012400432	SET SCREW SOCKET (FT) M4X4	
44	XC2435020	ZIGZAG ADJUSTING NUT	

No.	CODE	NAME	REMARKS
45	018301032	BOLT SOCKET M3X10	
46	XC2748021	SPRING-Z	
47	XC7802051	NEEDLE HOLDER BROCK	
48	XC7803051	H SHAFT HOLDER ASSY	
49	XC8374051	SHAFT	
50	014300532	SET SCREW SOCKET (CP) M3X5	
51	XC2441021	SPRING	
52	XC2443020	THREAD TAKE-UP LEVER LINK	
53	XC7806051	PRESSER BAR	
54	048050346	RETAINING RING E5	
55	XC7807051	PRESSER BAR CLAMP ASSY	
56	014501032	SET SCREW SOCKET (CP) M5X10	
57	XC7810051	SPRING	
58	XC7811050	PRESSER FOOT RACK	
59	XC3015051	PRESSER FEED HOLDER ASSY	
60	XA4813051	SCREW	
61	XC3021051	Z FOOT	
62	XC7812051	PRESSER FOOT LIFTER	
63	XC2452051	PRESSER LIFT SHAFT	
64	XC7813051	SPRING	
65	048040346	RETAINING RING E4	
66	XC2453051	LEVER GUIDE SHAFT	
67	XC7814051	LEVER AB	
68	XC7815051	NEEDLE THREADER DRIVING PLATE	
69	XC7816051	SPRING	
70	XC7817051	LEVER SUPPORTER PLATE	
71	138433051	TAPTITE,PAN B M3X6	
72	XC7787051	BH SWITCH ASSY	
73	XZ0149051	TAPTITE,PAN B 4X12	
74	XC7818150	Z ZIGZAG CAM	
75	XC7819051	Z ZIGZAG LEVER ASSY	
76	XC2480020	Z LEVER CUP	
77	XC8225051	ASSY:ZPM LEAD WIRE	
78	X59629051	TAPTITE,BIND B M3X10	
79	XC2483020	T CAM	
80	XC7822051	TENSION RELEASE ROD ASSY	
81	XC5985051	THREAD RELEASE LEVER ASSY D6	
82	XC7824051	ADJUSTING PLATE ASSY	
83	XC7826051	TENSION RELEASE PLATE C	
84	048030346	RETAINING RING E3	
85	085411015	TAPTITE BIND B M4X10	
86	XC3037051	SCREW3X10	
87	XC2475051	SHAFT	
88	048020346	RETAINING RING E2	

NEEDLE-PRESSER MODULE

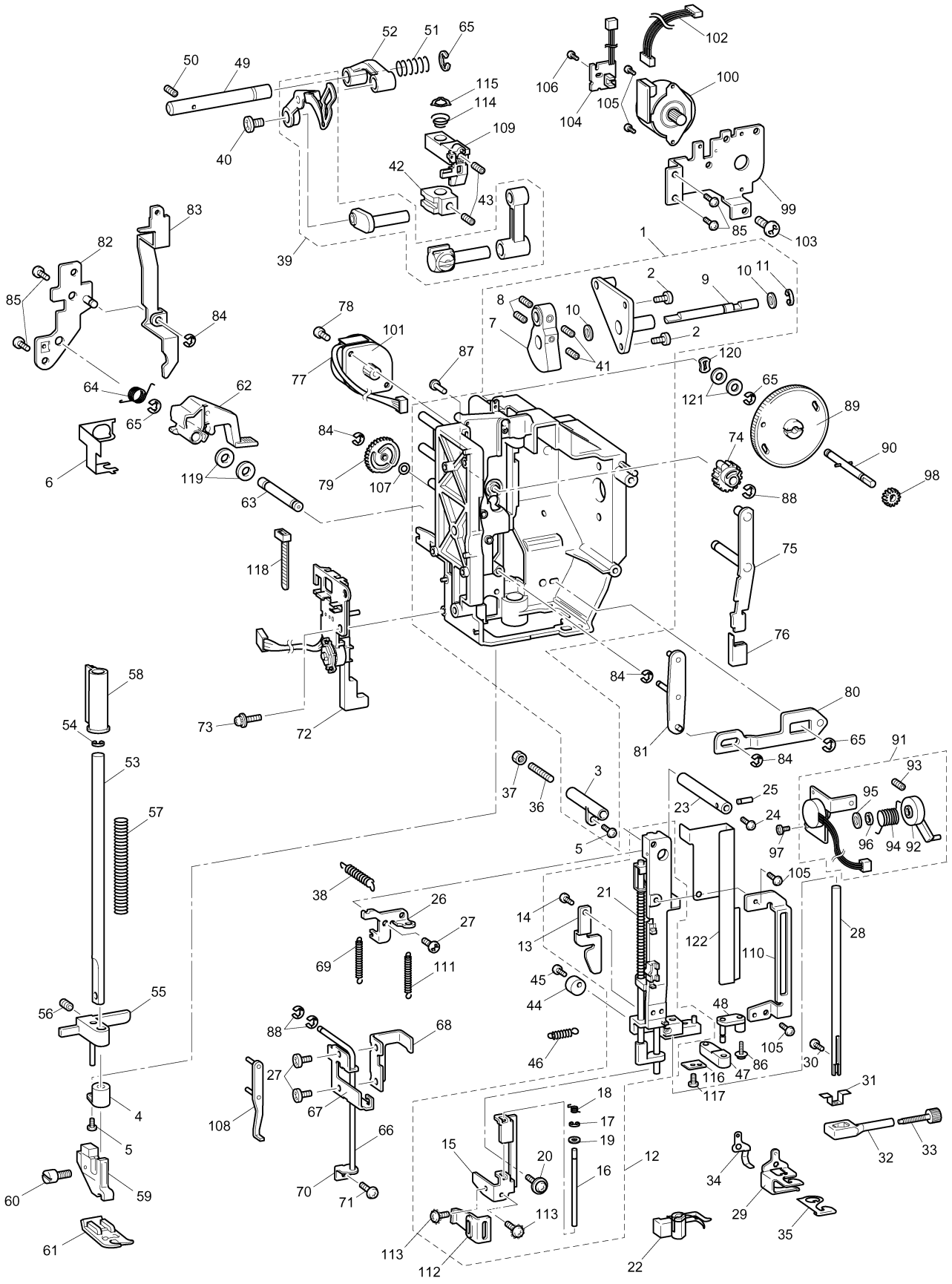

NEEDLE-PRESSER MODULE

No.	CODE	NAME	REMARKS
89	XC7827051	PRESSER DIAL	
90	XC8372051	PRESSER DIAL SHAFT ASSY	
91	XC7828051	PT HOLDER ASSEMBLY	
92	XA6493051	PT LEVER	
93	012300632	SET SCREW SOCKET (FT) M3X6	
94	XA1894051	SPRING	
95	026060235	WASHER PLAIN M 6	
96	X52569001	NUT	
97	136681051	TAPTITE, BIND B M3X8	
98	XC7830050	PRESSER DIAL GEAR	
99	XC7831151	PRESSER PM HOLDER	
100	XC8228051	ASSY:PF PULSE MOTOR	
101	XC8678051	ZPM INSULATION ASSY	
102	XC8229051	ASSY:PFPM LEAD WIRE	
103	060400616	SCREW BIND M4X6	
104	XC8230051	ASSY:ATPF INIT PCB	
105	060300616	SCREW BIND M3X6	
106	XC7644051	SCREW, PAM (S/P WASHER) M3X5	
107	XZ0155051	POLYESTER SLIDER	
108	XC6241151	RELEASE PLATE ASSY	
109	XC6245051	NEEDLE BAR HOOK STAND ASSY	
110	XC6251051	RELEASE GUIDE PLATE	
111	XC6252051	SPRING	
112	XC6253050	RELEASE ADJUSTER	
113	XC4433051	SCREW,PAN(T WASHER)M3X6	
114	XC6254051	NEEDLE BAR PRESSER SPRING	
115	XC6255050	WASHER,THRUST	
116	XC7832051	ADJUST PLATE	
117	060260516	SCREW BIND M2.6X5	
118	X53169050	BAND	
119	XA1860150	WASHER	
120	103810052	WASHER, WAVE SPRING	
121	XA0362051	WASHER	
122	XD0604050	SPRING GUARD	
	XC8672152	NEEDLE SUPPLY UNIT ASSY (U.S.A., CANADA)	
	XC8672151	NEEDLE SUPPLY UNIT ASSY (OTHER)	

NEEDLE-PRESSER MODULE

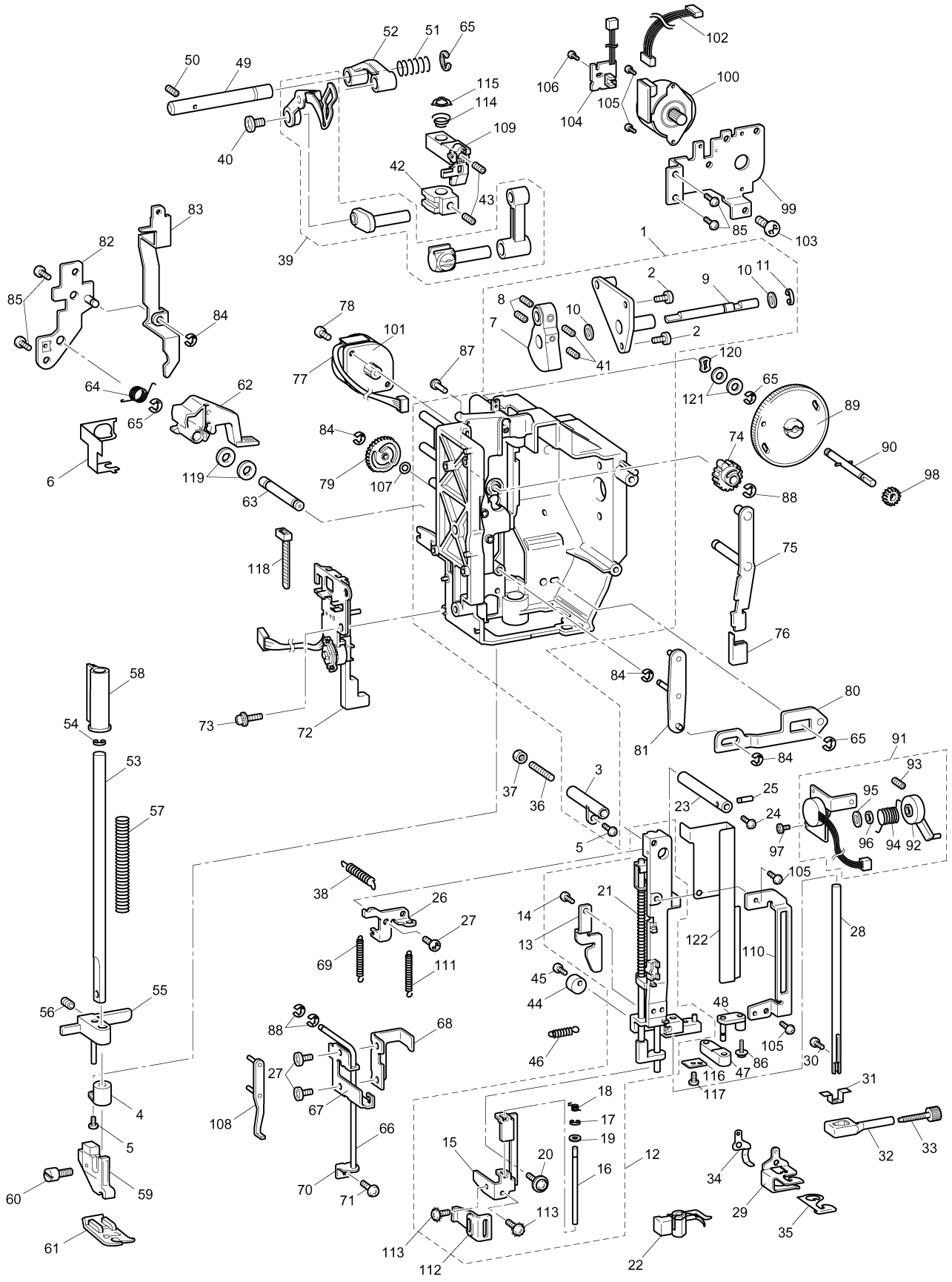

FEED MODULE

No.	CODE	NAME	REMARKS
1	XC7638051	BASE PLATE	
2	XC7837051	F GEAR STOPPER PLATE	
3	060400416	SCREW, BIND M4X4	
4	XC7841151	FEED BAR ASSY	
5	XC7842151	FEED BAR	
6	XC8530051	FEED DOG BASE ASSY	
7	XC7846151	FEED DOG	
8	060300616	SCREW BIND M3X6	
9	XC7847051	FEED DOG CORRECTION PLATE	
10	XC3338021	SCREW3X8	
11	XC7848051	FEED DOG BASE SHAFT A	
12	137999050	POLYESTER SLIDER	
13	014400432	SET SCREW SOCKET (CP) M4X4	
14	XC7849051	FEED DOG BASE SHAFT B	
15	012400432	SET SCREW SOCKET (FT) M4X4	
16	XC2512051	FEED BAR SHAFT A	
17	XC8337021	FEED ARM A	
18	XC2517021	FEED ARM B ASSY	
19	XC2521021	FEED SUPPORTING PLATE ASSY	
20	048020346	RETAINING RING E2	
21	048030346	RETAINING RING E3	
22	137999050	POLYESTER SLIDER	
23	XC9277051	SPRING	
24	XC7835051	HORIZONTAL FEED SHAFT	
25	XC8195051	SHAFT STOPPER PLATE	
26	048050346	RETAINING RING E5	
27	X50546050	WASHER,THRUST	
28	130676151	SET SCREW COLLAR	
29	XC2527021	FEED ADJUSTER	
30	XC2529020	F GEAR	
31	XC2530021	SPRING	
32	137713050	POLYESTER SLIDER	
33	XC2531021	SPRING	
34	XZ0397051	FPM HOLDER ASSY	
35	XC9759051	FPM INSULATION ASSY	
36	XC8236051	ASSY:FPM LEAD WIRE	
37	XC2587050	RUBBER	
38	060300516	SCREW BIND M3X5	
39	XC3338021	SCREW3X8	
40	018402532	BOLT SOCKET M4X25	
41	XC2537021	SPRING	
42	XC2538021	SPRING	
43	XC2539021	BUSHING SUPPORTER ASSY	
44	060400616	SCREW BIND M4X6	
45	XC2542021	BUSHING PRESSER B	
46	060300516	SCREW BIND M3X5	
47	012401032	SET SCREW SOCKET (FT) M4X10	
48	XC7853150	CAP	
49	XC7854051	VERTICAL ROD	
50	X56851051	LOCK NUT	
51	XZ0385051	SPRING	
52	XC8361051	VERTICAL FEED SHAFT	
53	XC7856051	SPRING	
54	XC7857050	FEED DOG CORRECTION LEVER	
55	XC7858050	VERTICAL LEVER	
56	XC2552051	SET SCREW COLLAR	
57	014400432	SET SCREW SOCKET (CP) M4X4	
58	048030346	RETAINING RING E3	
59	XC7859051	VERTICAL SUPPORTING PLATE	
60	137713050	POLYESTER SLIDER	
61	XC2210051	OUTER ROTALY HOOK ASSY	
62	X58913052	BIND 2X3	
63	XC2230051	OUTER ROTARY HOOK SHAFT	
64	137805052	SPACER	
65	137976051	WASHER 6	
66	014400632	SET SCREW SOCKET (CP) M4X6	
67	XC8406251	INNER ROTARY HOOK BRACKET ASSY	
68	X58913051	BIND 2X3	
69	XC8350051	PHOTO DIODE HOLDER ASSY	
70	XC8240051	ASSY:PLTSW D6	
71	XC7865050	NEEDLE PLATE SW HOLDER	
72	XC7866251	CORD HOLDER	
73	060260316	SCREW BIND M2.6X3	
74	000020415	SCREW BIND M2X4	
75	XZ0181021	STOPPER PLATE BLOCK ASSY	
76	060400516	SCREW BIND M4X5	
77	060300816	SCREW BIND M3X8	
78	XC7867051	LOWER SHAFT B ASSY	
79	X52664050	LOWER SHAFT BUSHING	
80	X51383050	WASHER,THRUST	
81	048060346	RETAINING RING E6	
82	137768151	SET SCREW COLLAR	
83	014400432	SET SCREW SOCKET (CP) M4X4	
84	XC2566021	BUSHING SUPPORTER A	
85	XC2567021	BUSHING PRESSER A	
86	060401616	SCREW BIND M4X16	
87	XC7872151	NEEDLE PLATE A	
88	XC2570021	STOPPER PLATE	

FEED MODULE

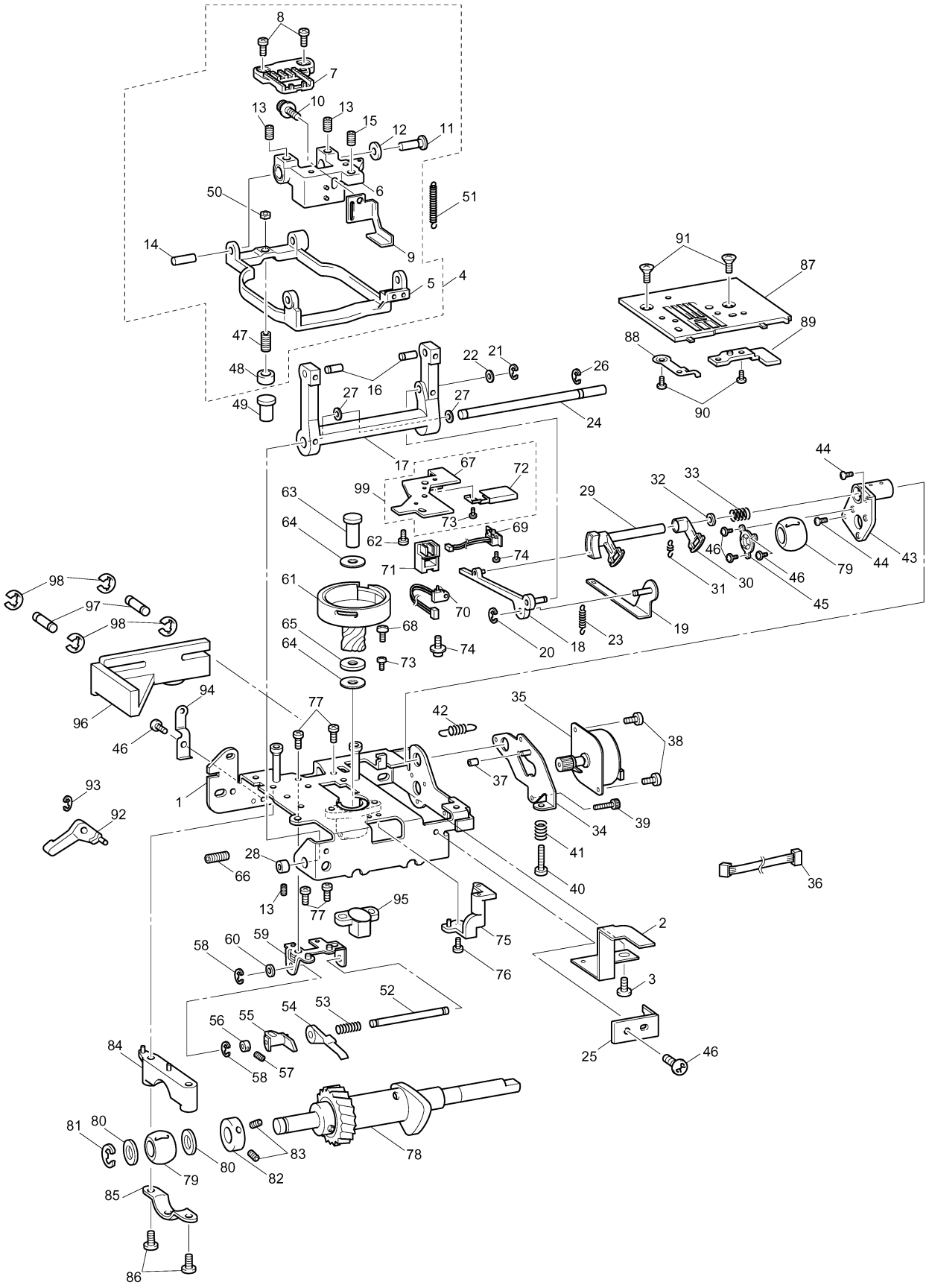
8
7
10
13
13
15
12
11
6
50
51
14
9
5
4
91
87
89
88
90
47
48
49
22
21
26
16
27
27
24
17
67
72
99
63
73
64
62
69
71
74
29
32
33
44
46
31
30
46
79
44
43
45
61
70
98
97
98
65
68
64
74
73
20
18
23
19
96
94
77
42
35
38
46
37
1
93
92
34
39
41
28
66
40
36
13
77
95
75
2
58
60
59
76
3
52
53
54
55
56
57
58
25
46
84
81
80
79
80
83
82
78
85
86

FEED MODULE

No.	CODE	NAME	REMARKS
89	XC7873051	STOPPER PLATE	
90	060260316	SCREW BIND M2.6X3	
91	X50487051	SCREW M4	
92	XC7874050	DROP KNOB	
93	048030346	RETAINING RING E3	
94	XC7875051	SPRING PLATE	
95	XC7862051	VERTICAL FEED BUSH	
96	XC7877051	DROP LEVER	
97	XC3587021	SLIDE SHAFT A	
98	048020346	RETAINING RING E2	
99	XC9987051	I R HOOK BRACKET SUPPLY ASSY	
	XC8673052	FEED SUPPLY UNIT ASSY (U.S.A., CANADA)	
	XC8673051	FEED SUPPLY UNIT ASSY (OTHER)	

FEED MODULE

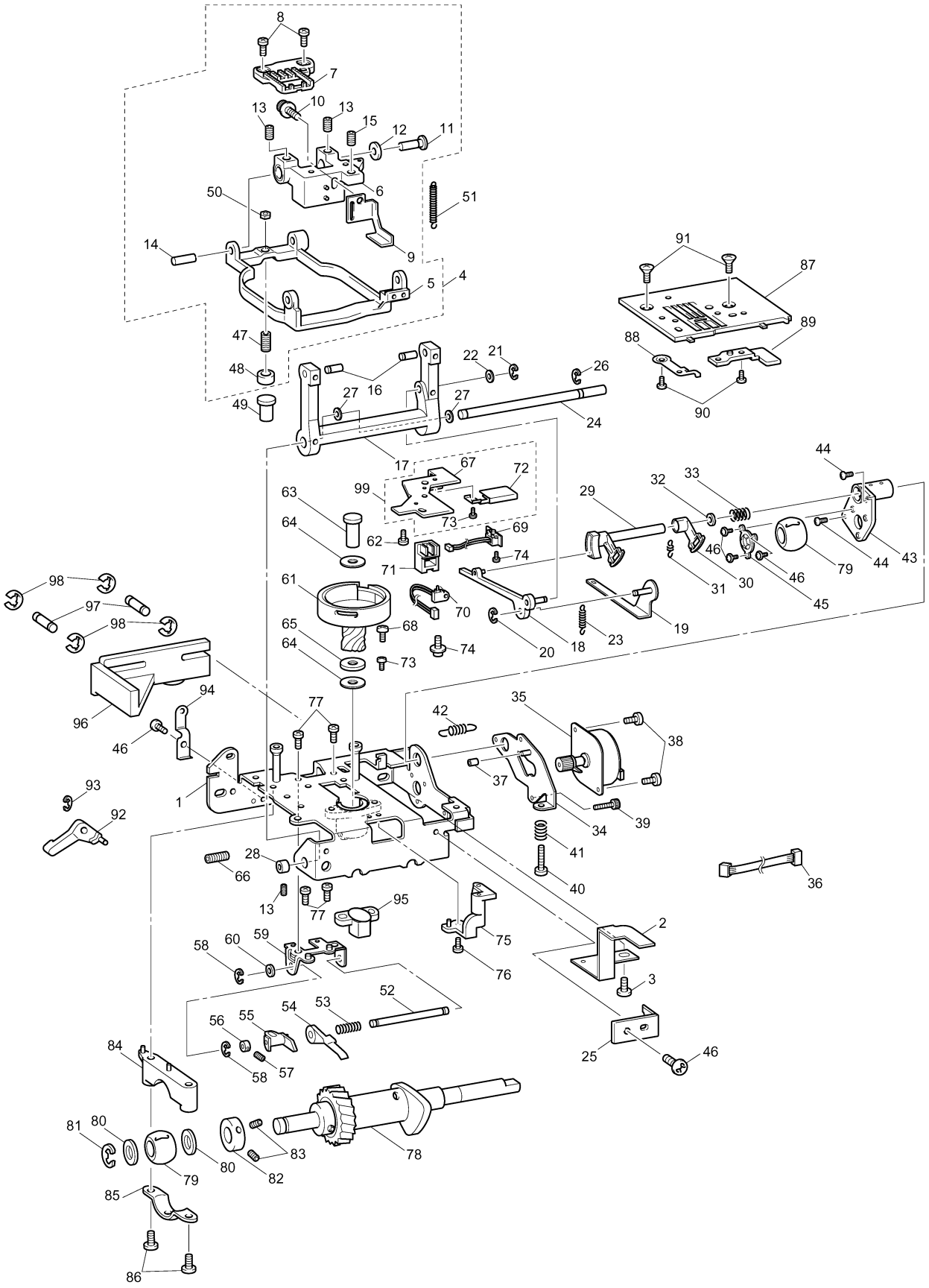
8
7
10
13
13
15
12
11
6
50
51
14
9
5
4
91
87
89
88
90
47
48
49
22
21
26
16
27
27
24
17
67
72
99
63
73
64
62
69
71
74
29
32
33
44
46
31
30
46
79
44
43
45
61
70
98
97
98
65
68
64
74
73
20
18
23
19
96
94
77
42
35
38
46
37
93
1
92
34
39
41
28
66
40
36
13
77
95
75
2
58
60
59
76
3
52
53
54
55
56
84
58
57
25
46
81
80
83
78
80
79
82
85
86

THREAD CUTTER MODULE

No.	CODE	NAME	REMARKS
1	XC2576021	THREAD CUTTER FRAME ASSY	
2	XC2579020	SPACER	
3	X80321001	NT LOWER THREAD CUTTER	
4	XC2595121	PRESSER PLATE ASSY	
5	060300416	SCREW BIND M3X4	
6	XC2598120	SPRING PLATE	
7	XC2587050	RUBBER	
8	048030346	RETAINING RING E3	
9	XC2583121	THREAD HOOK ASSY	
10	137713050	POLYESTER SLIDER	
11	X56731050	WASHER	
12	048040346	RETAINING RING E4	
13	XC2581121	THREAD CUTTER LEVER	
14	XC2582020	THREAD CUTTER LEVER GEAR	
15	0A4300605	SCREW PAN (S/P WASHER) M3X6	
16	XC8416051	MOTOR HOLDER ASSY	
17	XC2592020	IDLE GEAR A	
18	XC2593020	IDLE GEAR B	
19	X56323021	SPRING	
20	048020346	RETAINING RING E2	
21	XC8678051	ZPM INSULATION ASSY	
22	XC8244051	ASSY:CPM LEAD WIRE	
23	060300416	SCREW BIND M3X4	
24	XC2594051	COLLAR	
25	060402016	SCREW BIND M4X20	
26	X53169050	BAND	
27	137713050	POLYESTER SLIDER	
28	XC8407050	WAVE-SHAPE SPRING WASHER	
	XC8674252	THREAD CUTTER SUPPLY ASSY (U.S.A., CANADA)	
	XC8674251	THREAD CUTTER SUPPLY ASSY (OTHER)	

THREAD CUTTER MODULE

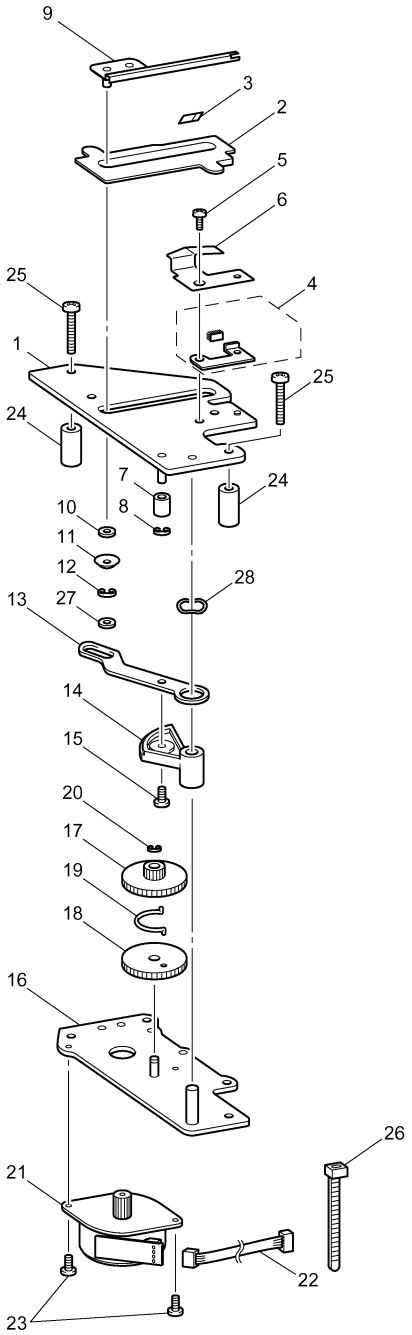

NV4000D/ NV4000
14H04HF882S90/91