PARTS CATALOGUE FOR

COMPUTERIZED SEWING MACHINE

NX600

6. 2003.

CONTENTS

(1) PRINCIPAL PARTS 2

(2) UPPER SHAFT / NEEDLE BAR, PRESSER MECHANISM 4

(3) FEED, ROTARY HOOK / SIDE FEED / THREAD CUTTING MECHANISM 6

(4) ROTARY HOOK DRIVE / BOBBIN WINDER MECHANISM 8

(5) THREAD GUIDE MECHANISM 10

(6) ELECTRONIC PARTS / MOTOR UNIT 12

(7) ATTACHMENTS / PRINTED MATTER / PACKING MATERIALS 14

NEEDLE-PRESSER MODULE 16

FEED MODULE 20

THREAD CUTTER MODULE 22

(1) PRINCIPAL PARTS

No.	CODE	NAME	REMARKS
1	XC4617152	REAR COVER	
2	060400816	SCREW, BIND M4 × 8	
3	XC2306052	FACE PLATE	
4	X80321001	NT LOWER THREAD CUTTER	
5	138384051	RETAINING RING,CS5	
6	XC2747051	NEEDLE THREAD LEVER KNOB	
7	XA5825051	NEEDLE THREAD LEVER SHAFT	
8	XC3039051	NEEDLE THREAD LEVER	
9	138260051	THREAD THROUGH LEVER SPRING	
10	XA6320050	SHAFT PRESSER PLATE	
11	XA5525051	WASHER,PLAIN	
12	138433051	TAPTITE,PAN B M3 × 6	
13	XC0508050	RUBBER WASHER	
14	X59629051	TAPTITE,BIND B M3 × 10	
15	052401406	SCREW PAN (S/P WASHER) M4 × 14	
16	XC4441253	FRONT COVER	
17	XC2312053	SS-BUTTON	
18	XC2313051	REVERSE BUTTON	
19	XC2314051	THREAD CUT BUTTON	
20	XC2315051	SV KEYTOP	
21	XC2316050	SV JOINT PLATE	
22	XC2317151	PCB ASSY:SS-VR F2	CHG
23	XC4442052	RUBBER KEY F3	
24	XC4403151	PCB ASSY:OPERATION F3	CHG
25	XC4444051	OPERATION PCB HOLDER	
26	XA1786053	SPOOL PIN	
27	XC2337051	SPOOL PIN HOLDER ASSY	
28	XC4531151	PCB UNIT:LED LAMP-FR	CHG
29	XC7081051	LAMP HOLDER SUPPORTER	CHG
30	XZ0150051	TAPTITE,PAN B M2.6 × 10	
31	XC2346051	THREAD BOBBIN COVER	
32	136681051	TAPTITE, BIND B M3 × 8	
33	087311015	TAPTITE, CUP B M3 × 10	
34	XC2620051	BOBBIN WINDER GUIDE ASSY	
35	XA8390051	SCREW	
36	XZ0143050	SSVR INSULATION SHEET	
37	XC4418051	SINGLE LIGHT GUIDE ASSY	
38	XC4543051	BOARD PRESSER	
39	X59629051	TAPTITE,BIND B M3 × 10	
40	085411416	TAPTITE, BIND B M4 × 14	
41	XA3337052	TAPTITE,CUP P M4 × 20	
42	XC2348051	HANDLE	
43	XC2349051	HANDLE HOLDER	
44	XC2350051	HANDLE SHAFT	

No.	CODE	NAME	REMARKS
45	048040346	RETAINING RING, E4	
46	137713050	POLYESTER SLIDER	
47	XC2353051	BASE PLATE	
48	XA1805051	BASE RUBBER A	
49	XA4687051	REGULATOR ADJUSTING SCREW ASSY	
50	XC2354051	BASE PLATE COVER	
51	060300516	SCREW, BIND M3 × 5	
52	XC4447051	KNEE LIFTER ASSEMBLY	
53	XA6215151	SPRING,PLATE	
54	060260316	SCREW, BIND M2.6 × 3	
55	062400612	SCREW, PAN M4 × 6	
56	X57908051	TAPTITE,BIND S M4 × 10	
57	XC2358251	ACCESSORY TABLE	CHG
58	XC2359052	ACCESSORY TABLE DOOR	
59	XC2360252	CASE ASSEMBLY	CHG
60	125440050	CASE FELT	
61	XC2702250	HEAD SUPPORT SF-L	CHG
62	XC2703050	HEAD SUPPORT SF-R	
63	XZ0161051	BLIND PLATE	
64	XC2365051	NEEDLE PLATE B	
65	XC2366051	SLIDE BUTTON	
66	XC2367051	CUTTER COVER	
67	XC2368051	SPRING PLATE	
68	X80321001	NT LOWER THREAD CUTTER	
69	XC2369051	NEEDLE PLATE COVER	
70	XC2304066	TOP COVER (U.S.A., CANADA)	
	XC2304065	TOP COVER	
71	XC4325057	INDICATION PLATE ASSY	
72	XC4433051	SCREW,PAN(T WASHER)M3 × 6	

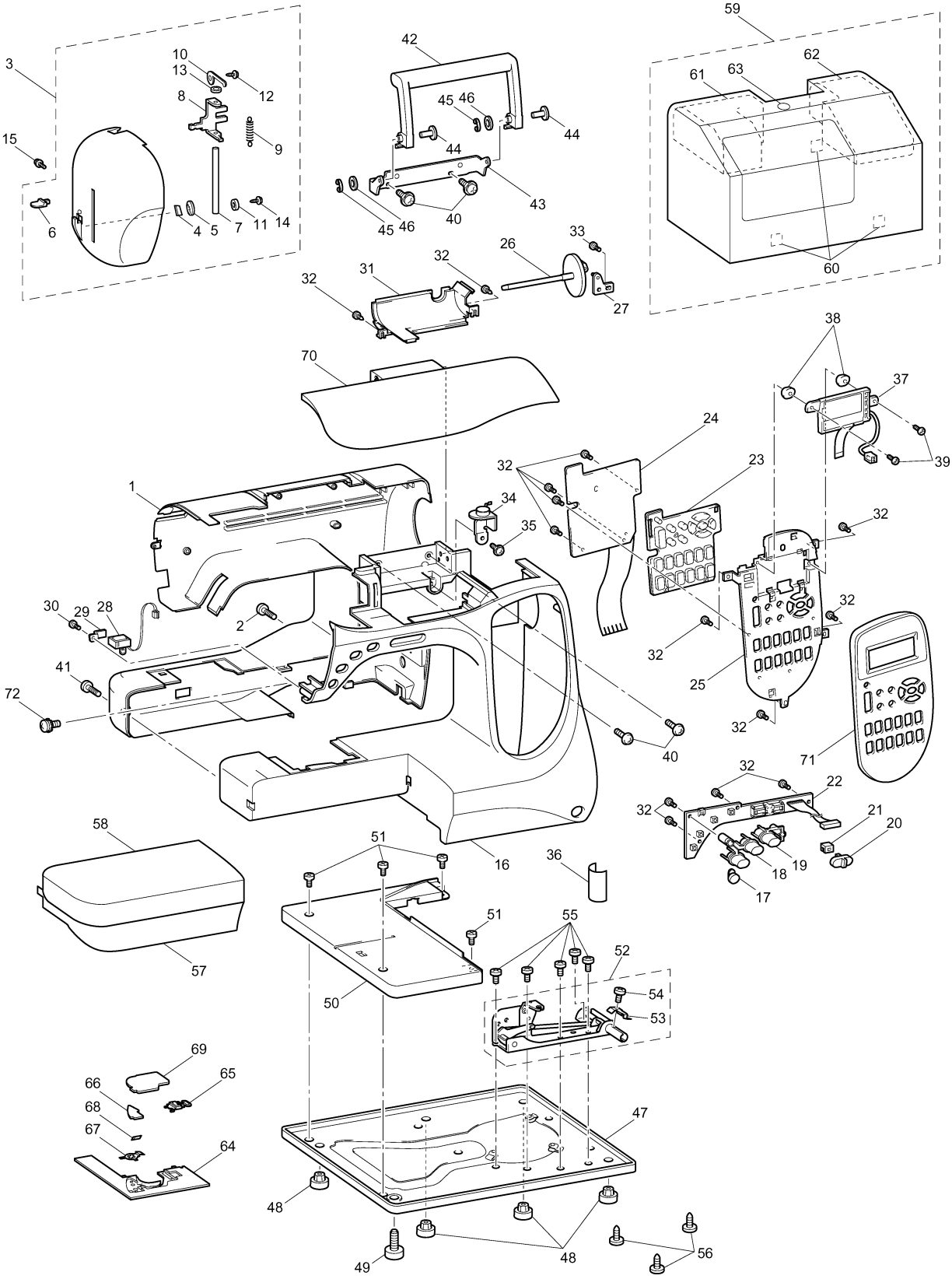
3
10
13
12
8
9
15
6
4
5
7
11
14
42
45
46
44
44
43
45
46
40
59
62
61
63
60
33
26
32
31
32
27
70
38
37
39
24
32
23
1
34
35
32
30
29
28
2
32
32
41
72
25
32
40
71
32
22
32
21
20
58
51
16
36
19
18
17
51
55
52
57
50
54
53
69
65
66
68
67
64
47
48
49
48
56

(2) UPPER SHAFT / NEEDLE BAR, PRESSER MECHANISM

No.	CODE	NAME	REMARKS
		UPPER SHAFT MECHANISM	
1	XC3246051	UPPER SHAFT ASSY	
2	XC2375051	PULLEY	
3	048060346	RETAINING RING, E6	
4	XC2380050	UPPER SHAFT PULLEY	
5	XC2383051	FIXED JOINT	
6	012500532	SET SCREW, SOCKET (FT) M5 × 5	
7	132421051	BUSHING PRESSER	
8	X57908051	TAPTITE,BIND S M4 × 10	
9	XC2384051	TIMING BELT 420-5GT-6	
10	XC2385051	TENSION PULLEY ASSEMBLY	
11	138172051	SCREW,PAN(S/P WASHER)M4 × 10	
12	XC2387151	PCB ASSY:NP-F2	CHG
13	136681051	TAPTITE, BIND B M3 × 8	
14	XC2390051	PCB HOLDER	
15	060400816	SCREW, BIND M4 × 8	
16	XC3028051	INSULATION SHEET	
17	014400432	SET SCREW, SOCKET (CP) M4 × 4	
		NEEDLE BAR, PRESSER MECHANISM	
18	XC2503051	SHAFT	
19	XC2297051	PRESSER PLATE A	
20	XC2298051	PRESSER PLATE B	
21	X57908051	TAPTITE,BIND S M4 × 10	
22	XC2504050	ADJUSTING SCREW	
23	XZ0380051	SCREW, PAN (WASHER) M3 × 18	CHG
24	XC2505050	PLATE SPRING	
25	060400516	SCREW, BIND M4 × 5	
26	XC4532151	PCB UNIT:LED LAMP-FL	CHG
27	XZ0149051	TAPTITE,PAN B 4 × 12	
28	048050346	RETAINING RING, E5	
29	XC4473001	WIRE ASSY	
30	048040346	RETAINING RING, E4	
31	048030346	RETAINING RING, E3	

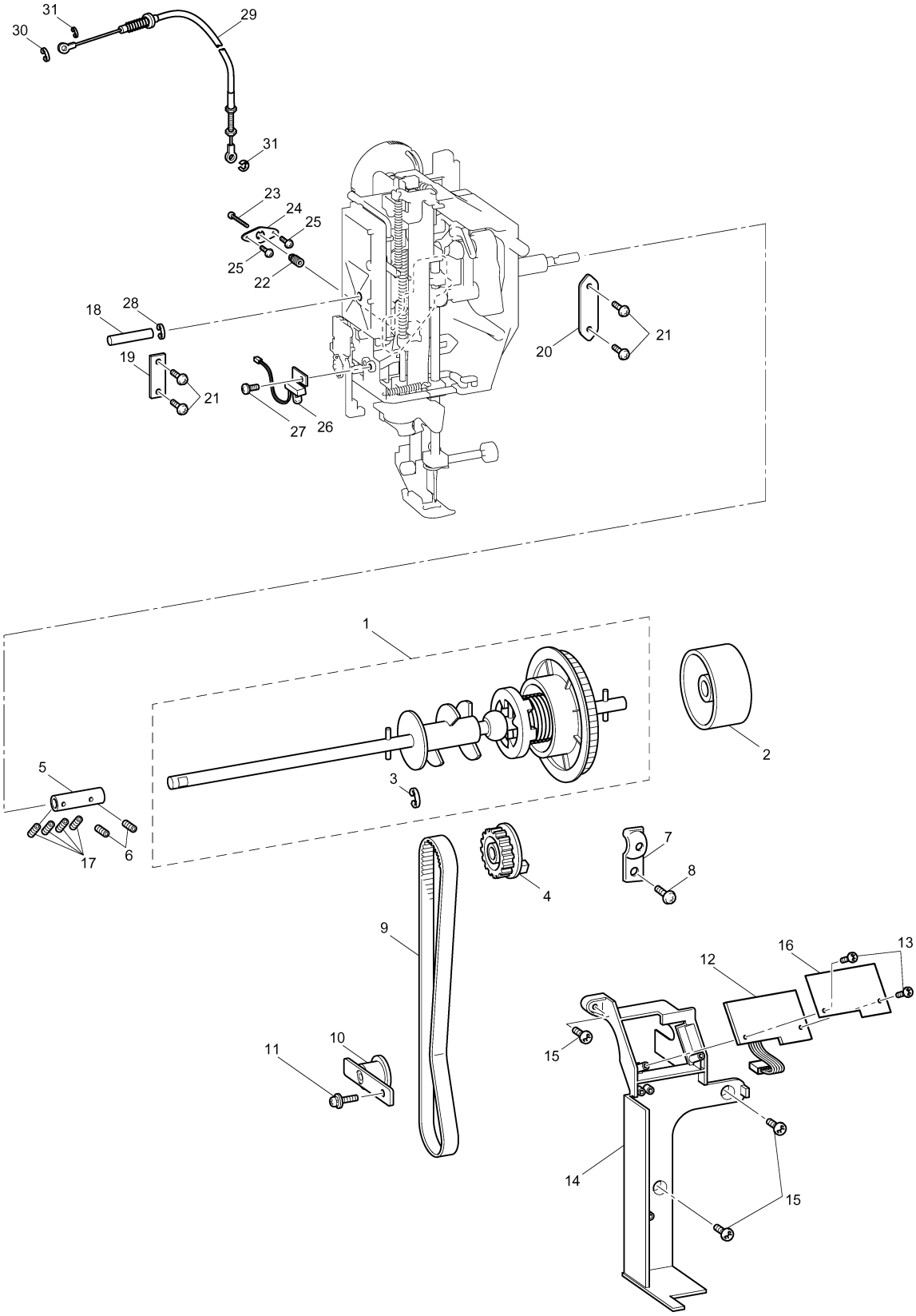
31
30
29
31
23
24
25
25
22
18
28
19
21
20
21
27
26
1
2
5
3
17
6
4
7
8
9
16
13
12
11
10
15
14
15

(3) FEED, ROTARY HOOK / SIDE FEED / THREAD CUTTING MECHANISM

No.	CODE	NAME	REMARKS
		FEED, ROTARY HOOK MECHANISM	
1	XC3153051	INNER ROTARY HOOK ASSY	
2	X52800150	BOBBIN	
3	060300416	SCREW, BIND M3 × 4	
4	XC3096051	SCREW M4	
5	XC3095051	LEADLINE GUIDE	CHG
6	XZ0160051	SHEET	
		SIDE FEED MECHANISM	
7	XC6256051	SPM HOLDER ASSY	
8	XC6258051	SIDE FEED PLATE	
9	XA9506051	SIDE FEED GEAR	
10	XA9507050	SIDE FEED WASHER	
11	XA9508051	SPRING,EXTENSION	
12	048030346	RETAINING RING, E3	
13	XC5340021	MOTOR, PULSE:S SMJ35-4840-E	
14	060300416	SCREW, BIND M3 × 4	
15	XA2189050	RUBBER	
16	XC0411051	S STOPPER	
17	060300616	SCREW, BIND M3 × 6	
18	XC6259051	SIDE FEED ARM ASSY	
19	XC6263051	SIDE FEED ADJUST PLATE	
20	XC6264051	SPRING,PLATE B	
21	060300516	SCREW, BIND M3 × 5	
22	XA9514051	SPRING,PLATE A	
23	X57908051	TAPTITE,BIND S M4 × 10	
24	XA2401050	WASHER	
25	X53169050	BAND	
		THREAD CUTTING MECHANISM	
26	060400516	SCREW, BIND M4 × 5	
27	060300516	SCREW, BIND M3 × 5	

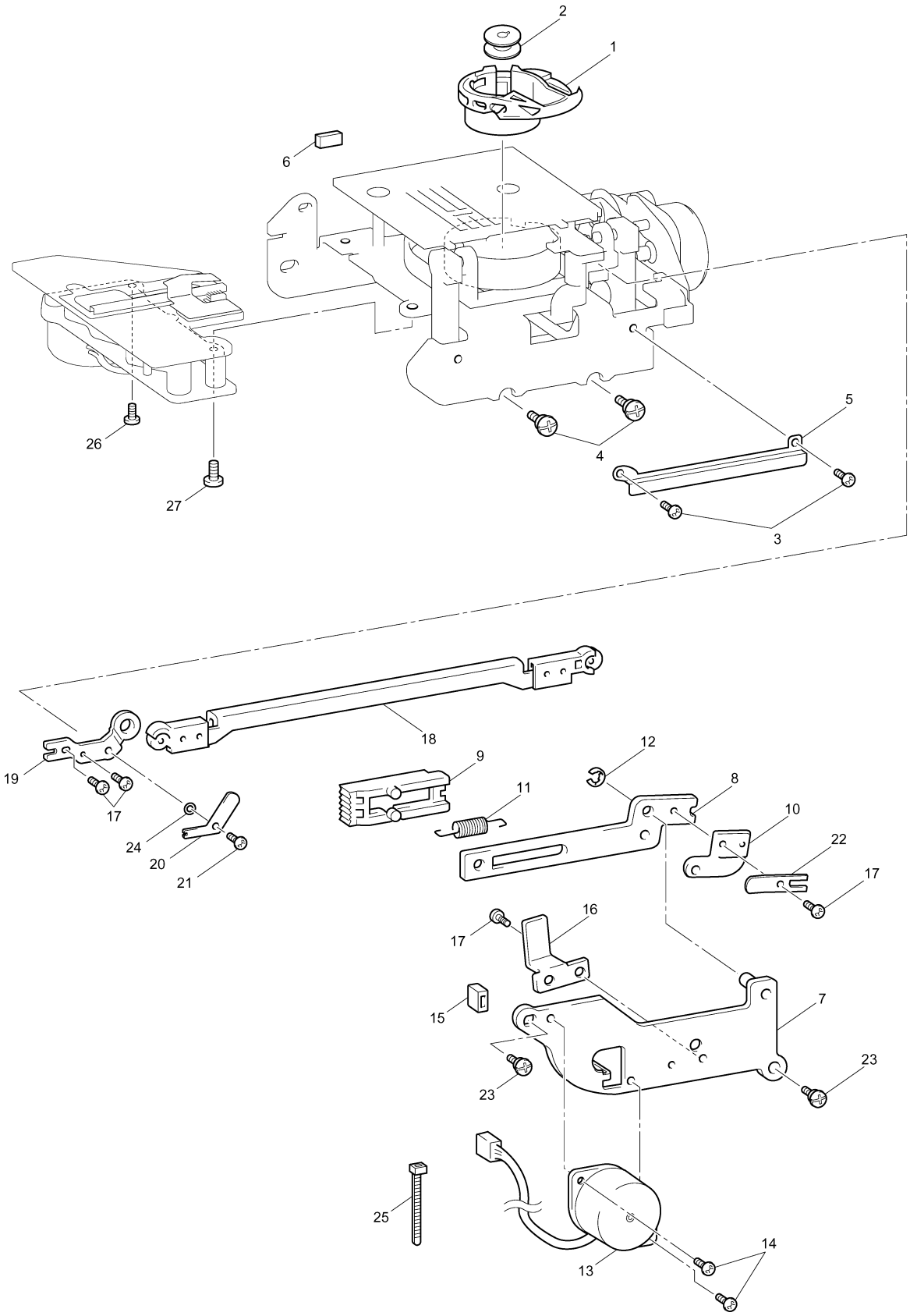
2
1
6
26
27
4
5
3
18
19
17
24
20
21
9
11
12
8
10
22
17
16
17
15
7
23
23
25
13
14

(4) ROTARY HOOK DRIVE / BOBBIN WINDER MECHANISM

No.	CODE	NAME	REMARKS
ROTARY HOOK DRIVE MECHANISM			
1	XC2600050	LOWER SHAFT A	
2	XC2601051	TIMING PULLEY D	
3	014500532	SET SCREW, SOCKET (CP) M5 × 5	
4	X52664050	LOWER SHAFT BUSHING	
5	X51383050	WASHER,THRUST	
6	048060346	RETAINING RING, E6	
7	137768151	SET SCREW COLLAR	
8	014400432	SET SCREW, SOCKET (CP) M4 × 4	
9	XC2602051	JOINT	
10	012500532	SET SCREW, SOCKET (FT) M5 × 5	
11	XC2602051	JOINT	
12	012500532	SET SCREW, SOCKET (FT) M5 × 5	
13	132421051	BUSHING PRESSER	
14	X57908051	TAPTITE,BIND S M4 × 10	
15	XC2603050	DISK	
BOBBIN WINDER MECHANISM			
16	XC2605051	BOBBIN WINDER ASSEMBLY HOLDER	
17	XC2606051	BW SHAFT HOLDER ASSEMBLY	
18	X55238051	RUBBER RING	
19	125928050	BOBBIN WINDER SHAFT SPRING	
20	XA2862051	BOBBIN WINDER SHAFT STOPPER	
21	XZ0070051	BOBBIN WINDER SPRING	
22	XC2614051	SW ADJUST PLATE	
23	060300616	SCREW, BIND M3 × 6	
24	XC2612051	SW ASSY:BW-F	
25	XC4672051	BOBBIN BASE ASSY	
26	XC2616051	BOBBIN BASE	
27	XA5877051	BOBBIN THREAD CUTTER HOLDER	
28	X80321001	NT LOWER THREAD CUTTER	
29	XC2618051	BOBBIN WINDER COVER	
30	XA8390051	SCREW	
31	XC4517051	BOBBIN PRESSER	
32	0A4302006	SCREW	
33	021300106	NUT, 1 M3	
34	XC2615051	BW HOLDER SUPPORTER	
35	X57908051	TAPTITE,BIND S M4 × 10	
36	060400816	SCREW, BIND M4 × 8	

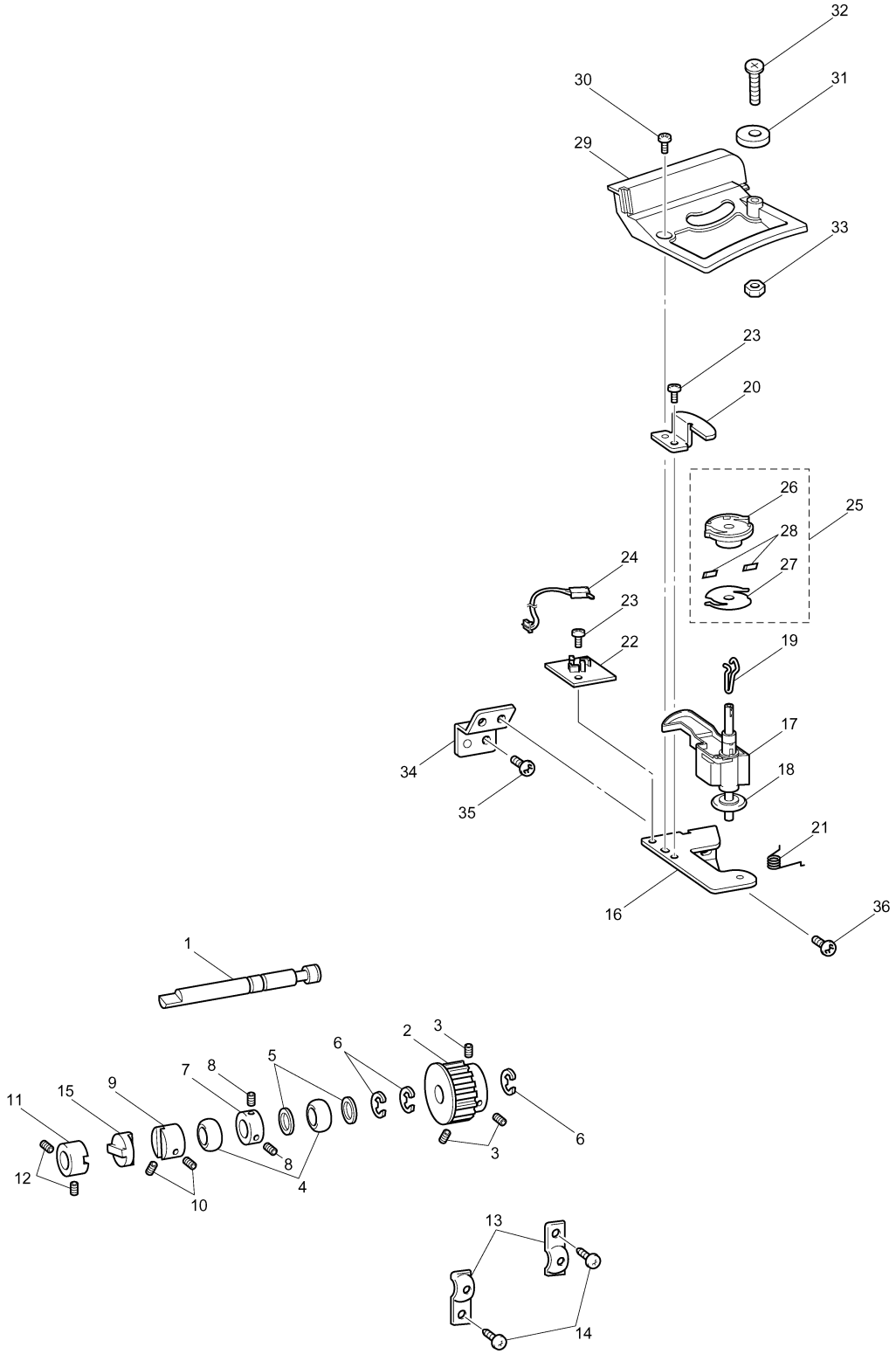
32
30
31
29
33
23
20
26
25
28
24
27
23
22
19
17
34
18
35
21
16
36
1
2
3
6
5
7
8
9
15
11
6
3
8
12
4
10
13
14

(5) THREAD GUIDE MECHANISM

No.	CODE	NAME	REMARKS
1	XC2624151	THREAD GUARD ASSEMBLY	
2	XA0083051	TENSION DISC A	
3	XC2626051	TENSION DISC B	
4	XC3437051	TENSION ADJUSTING SCREW	
5	XA1388051	TENSION DISC WASHER	
6	XC2627051	TENSION RELEASE PLATE ASSY	
7	XA9900051	THREAD TENSIONSPRING	
8	109763053	WASHER	
9	XA9562051	TENSION PLATE ASSY	
10	XZ0171051	THREAD TENSIONCAM	
11	048030346	RETAINING RING, E3	
12	XZ0170051	THREAD TENSION GEAR COVER	
13	X56323051	SPRING	
14	XA9935050	SPRING TAPE	
15	XC2635051	TENSION RELEASE HOLDER ASSY	
16	XA9571051	TENSION RELEASERLINK	
17	048030346	RETAINING RING, E3	
18	XC2638051	TENSION PRESSURE ASSY	
19	XA9575051	TENSION PLATE	
20	XA9576051	SPACER	
21	XA9577051	SPRING	
22	XC2640051	TENSION RELEASE CAM	
23	012300432	SET SCREW, SOCKET (FT) M3 × 4	
24	X57363051	POWER LOCK 2 × 3	
25	X57605051	SPRING	
26	048020346	RETAINING RING, E2	
27	XC2644051	PLATE ASSEMBLY	
28	XC2647051	THREAD GUIDE SHUTTER	
29	XC2749051	THREAD GUIDE	
30	XZ0145051	THREAD TAKE UP SPRING	
31	XC2648051	THREAD CATCHING SPRING CASE	
32	0A4301806	SCREW, PAN S/P WASHER M3 × 18	
33	XC2649050	THREAD GUIDE SHUTTER LINK	
34	048030346	RETAINING RING, E3	
35	XC2650051	SPRING	
36	XC2651050	THREAD GUIDE WIRE	
37	XA9996051	WASHER,PLAIN	
38	052300606	SCREW, PAN (S/P WASHER) M3 × 6	
39	060300416	SCREW, BIND M3 × 4	
40	XC2641051	PRESSER SWITCH HOLDER	
41	XC2642051	SW ASSY:PF-F	
42	XC4407021	MOTOR,PULSE:AT SMJ35-4840-D	
43	XC4484051	INITIAL ADJUSTING PLATE	
44	XC3253051	RUBBER	
45	X55260153	SPOOL PRESSER C	
46	XA9787051	SPRING	
47	085411015	TAPTITE, BIND B M4 × 10	
48	XC2652152	THREAD GUIDE COVER	
49	XC4485053	FRONT THREAD GUARD COVER	
50	XC4203251	THREAD GUIDE ASSY	
51	060300416	SCREW, BIND M3 × 4	
52	XC2659052	THREAD GUIDE COVER	
53	138433051	TAPTITE, PAN B M3 × 6	CHG
54	052300606	SCREW, PAN (S/P WASHER) M3 × 6	

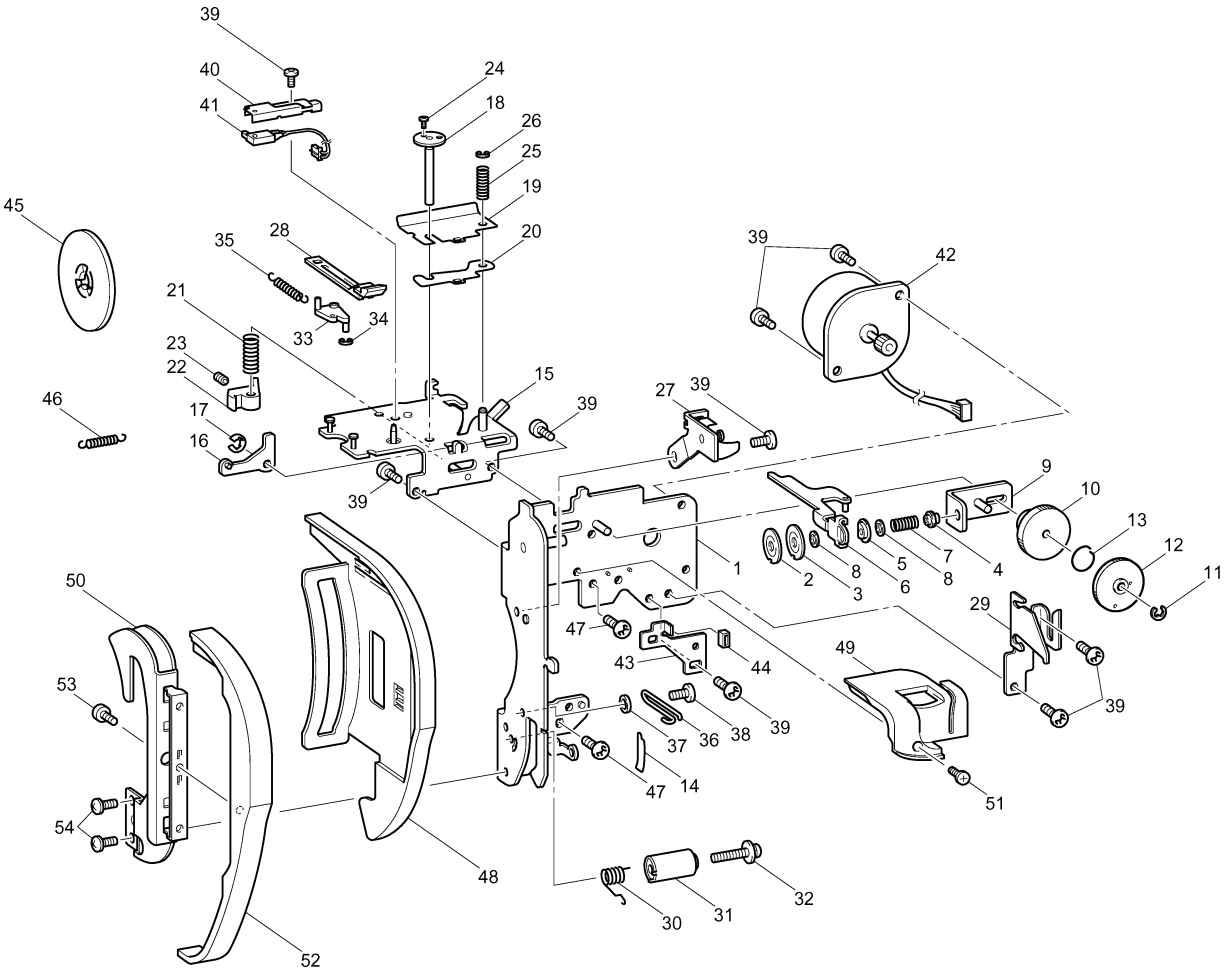
39
40
41
24
18
26
25
19
20
45
35
28
21
33
34
23
22
17
16
46
15
39
27
39
39
42
9
10
13
12
11
1
2
3
8
6
5
8
7
4
50
53
54
47
43
44
29
49
39
39
38
36
37
47
14
51
48
30
31
32
52

(6) ELECTRONIC PARTS / MOTOR UNIT

No.	CODE	NAME	REMARKS
		ELECTRONIC PARTS	
1	XC5333251	MAIN PCB ASSY:F3D-B	CHG
2	136681051	TAPTITE, BIND B M3 × 8	
3	060400816	SCREW, BIND M4 × 8	
4	XC2672051	LEAD ASSY:BH CABLE-F	
5	XA0286051	WIRE CLIP	
6	X57908051	TAPTITE,BIND S M4 × 10	
7	X53169050	BAND	
8	XC2675252	POWER SUPPLY UNIT,F (U.S.A.,	
	XC2675251	POWER SUPPLY UNIT,F	
9	XC4488051	FC JACK-F SUPPLY ASSY	
10	X51271001	NUT	
11	136681051	TAPTITE, BIND B M3 × 8	
12	052401406	SCREW PAN (S/P WASHER) M4 × 14	
13	XC4412051	INLET ASSY:F1D-US (U.S.A., CANADA)	
	XC4417051	INLET ASSY:F1D-EU	
14	060400616	SCREW, BIND M4 × 6	
15	XC6052051	POWER SUPLY CORD:UL CSA-LF (U.S.A., CANADA)	
	XA0070151	POWER SUPPLY CORD (EUROPE)	
	X59354051	POWER SUPPLY CORD -BS (U.K.)	
	X59328151	POWER CORD (AUSTRALIA)	
		MOTOR UNIT	
16	XC2685051	T BELT494-2GT-6	
17	XC2687051	ASSY:MAIN MOTOR-F	
18	XC2690051	MOTOR HOLDER	
19	XA9649050	FENDER RUBBER	
20	XA9650051	MOTOR SPACER PRESSER	
21	XC3027051	SPACER 4 × 6	
22	052401406	SCREW PAN (S/P WASHER) M4 × 14	
23	XA8474051	UPSET 4 × 12 DB	
24	XA9652150	MOTOR FAN	
25	XC6651151	FOOT CONTROLLER:FC-313-81-LF	CHG

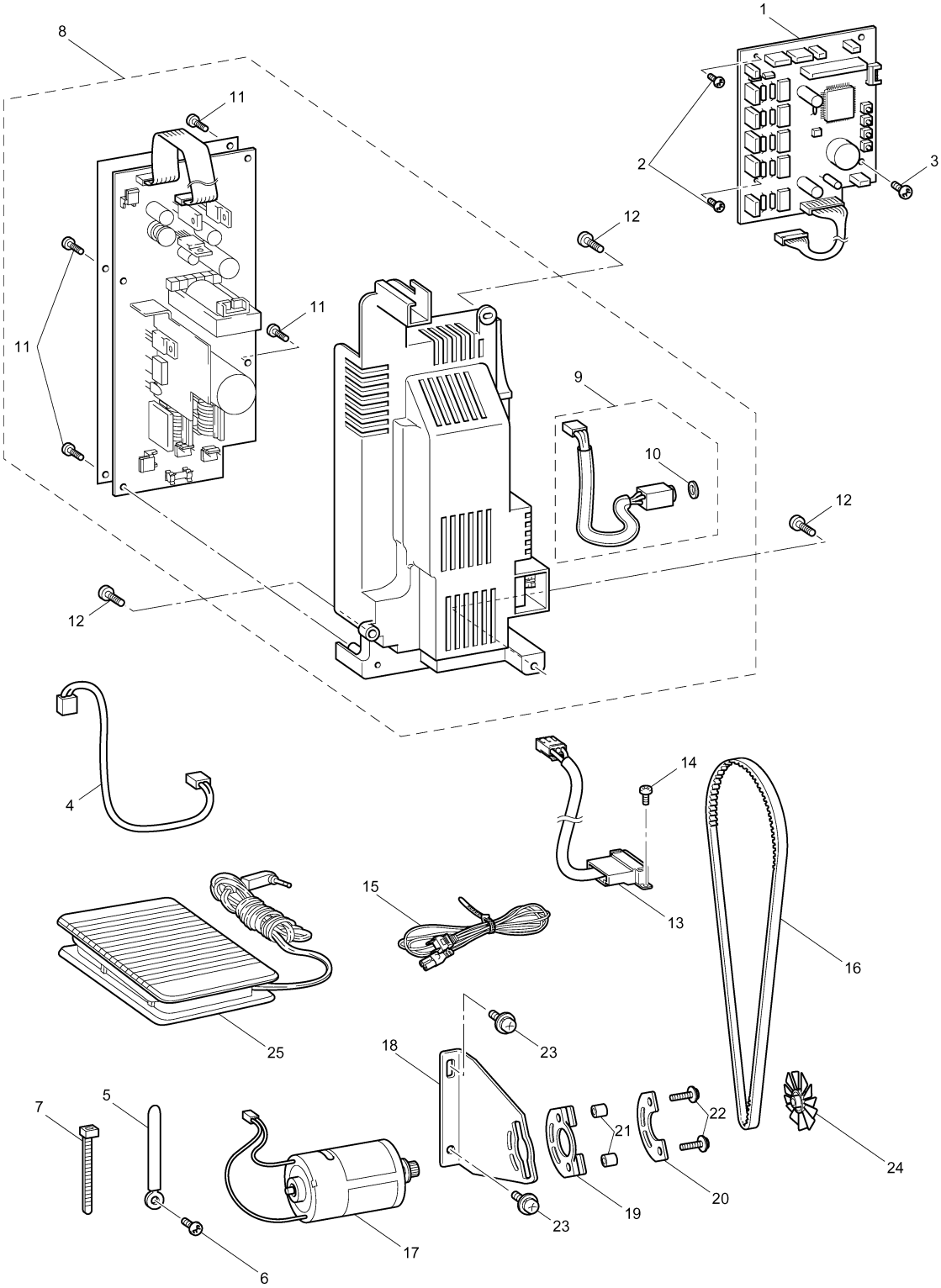
1
2
3
4
5
6
7
8
9
10
11
11
11
12
12
12
13
14
15
16
17
18
19
20
21
22
23
23
24
25

(7) ATTACHMENTS / PRINTED MATTER / PACKING MATERIALS

No.	CODE	NAME	REMARKS
		ATTACHMENTS	
1	XC4487051	ACCESSORY BAG	
2	XC2691051	BH PRESSER FOOT ASSY	
3	X54243001	SEAM RIPPER	
4	X58358051	Z NEEDLE ASSY	
5	X52800150	BOBBIN	
6	X59476051	CLEANING BRUSH	
7	XC3098051	OVERCASTING STITCH FOOT ASSY	
8	130012054	SPOOL PRESSER A	
9	X56409051	BLIND STITCH FOOT ASSY	
10	X59370051	ZIPPER FOOT	
11	130013154	SPOOL PRESSER B	
12	XA5523050	NET	
13	X55466051	SCREW DRIVER	
14	X55467051	SCREW DRIVER	
15	X55468051	SCREW DRIVER S	
16	135793051	PUNCH	
17	X53840351	TRANSPARENCY PRESSER FOOT	
18	130489001	BUTT0NING F00T	
19	XC4654051	EXTRA SPOOL PIN ASSY	
20	X55260153	SPOOL PRESSER C	
21	X57367051	BAG,135 × 150	
22	X59296151	TWIN NEEDLE (1PC)	
23	XC4489051	ACCESSORY TRAY	
24	XC4490050	SPONGE	
25	XA6941052	KNEE LIFTER LEVER ASSY (EXCEPT U.S.A., CANADA)	
26	XA4322001	QUILTING FOOT	
27	X59816001	WALKING FOOT ASSEMBLY	
28	X51804001	STITCH FOOT	
29	103561002	ZIPPER FOOT	
30	XA4783001	NO STICK FOOT H	
31	XA7869001	APPLIQUE FOOT	
32	XC4549050	SA527/GS4 GRID SHEET SET	
33	XA0188050	BAG	
34	XA3805051	QUILTING FOOT	CHG
35	X59819001	QUILTER	
36	XC3198001	SIDE CUTTER ASSY	
37	XC4513051	TABLE LEVER ASSY (U.S.A., CANADA)	
38	XC4491051	WIDE TABLE ASSY (U.S.A., CANADA)	
39	XC4492051	TABLE UPPER (U.S.A., CANADA)	
40	XC4493051	TABLE LOWER (U.S.A., CANADA)	
41	XC4495051	TABLE FOOT (U.S.A., CANADA)	
42	XC4550051	ADJUSTING FOOT (U.S.A., CANADA)	

No.	CODE	NAME	REMARKS
43	021400206	NUT, 2 M4 (U.S.A., CANADA)	
44	XC4497051	LOCK LEVER (U.S.A., CANADA)	
45	XC4498051	LOCK SPRING (U.S.A., CANADA)	
46	087411416	TAPTITE, CUP B M4 × 14 (U.S.A., CANADA)	
47	XA6069050	CUSHION RUBBER (U.S.A., CANADA)	
48	XA6941052	KNEE LIFTER LEVER ASSY (U.S.A., CANADA)	
49	X61231051	BAG,400 × 500H (U.S.A., CANADA)	
		PRINTED MATTER	
50	XC5427051	INSTRUCTION BOOK (English)	
	XC5429051	INSTRUCTION BOOK (German)	
	XC5428051	INSTRUCTION BOOK (French)	
	XC5430051	INSTRUCTION BOOK (German)	
	XC5432051	INSTRUCTION BOOK (Italian)	
	XC5431051	INSTRUCTION BOOK (Spanish)	
51	XC0378051	WARRANTY CARD (U.S.A.)	
	UH385100	WARRANTY CARD EUR (EUROPE)	
	XC6402051	WARRANTY CARD (U.K.)	
	XA6351151	WARRANTY CARD (ITALY)	
52	XC4546151	QUICK REFERENCE GUIDE	
53	XC5434051	QUICK REFERENCE GUIDE F3D-B	
54	XC4545051	CAUTION SHEET	
55	XC5440051	LANGUEAGE SETTING SHEET F3D	
56	130800051	BAG,220 × 310	
		PACKING MATERIALS	
57	XC2704150	BODY SUPPORT SF	
58	XC2705050	CASE SUPPORT	
59	XC2706050	CASE SUPPORT SF-R	
60	X60439151	BAG,630 × 630T	
61	XC6271051	CARTON (U.S.A., CANADA)	
	XC4623055	CARTON	
62	XC4805050	TABLE SUPPORT SF	
63	XC4515050	BAG, BUBBLE PACK 250 × 250	
64	X57847051	PLUG LABEL	
65	XC4762050	THREADER SUPPORT SF	
66	XC4631051	PAD (EXCEPT U.S.A., CANADA)	
67	XC4509051	TABLE CARTON	
68	XC4512050	PAD	
69	X61319051	BAG,750 × 600H	
70	181401172	INSERTION WARRANTY COUPON	ADD
71	XC7407051	INSTRUCTION BOOK, (Danish)	ADD
72	XC7408051	INSTRUCTION BOOK, (Swedish)	ADD

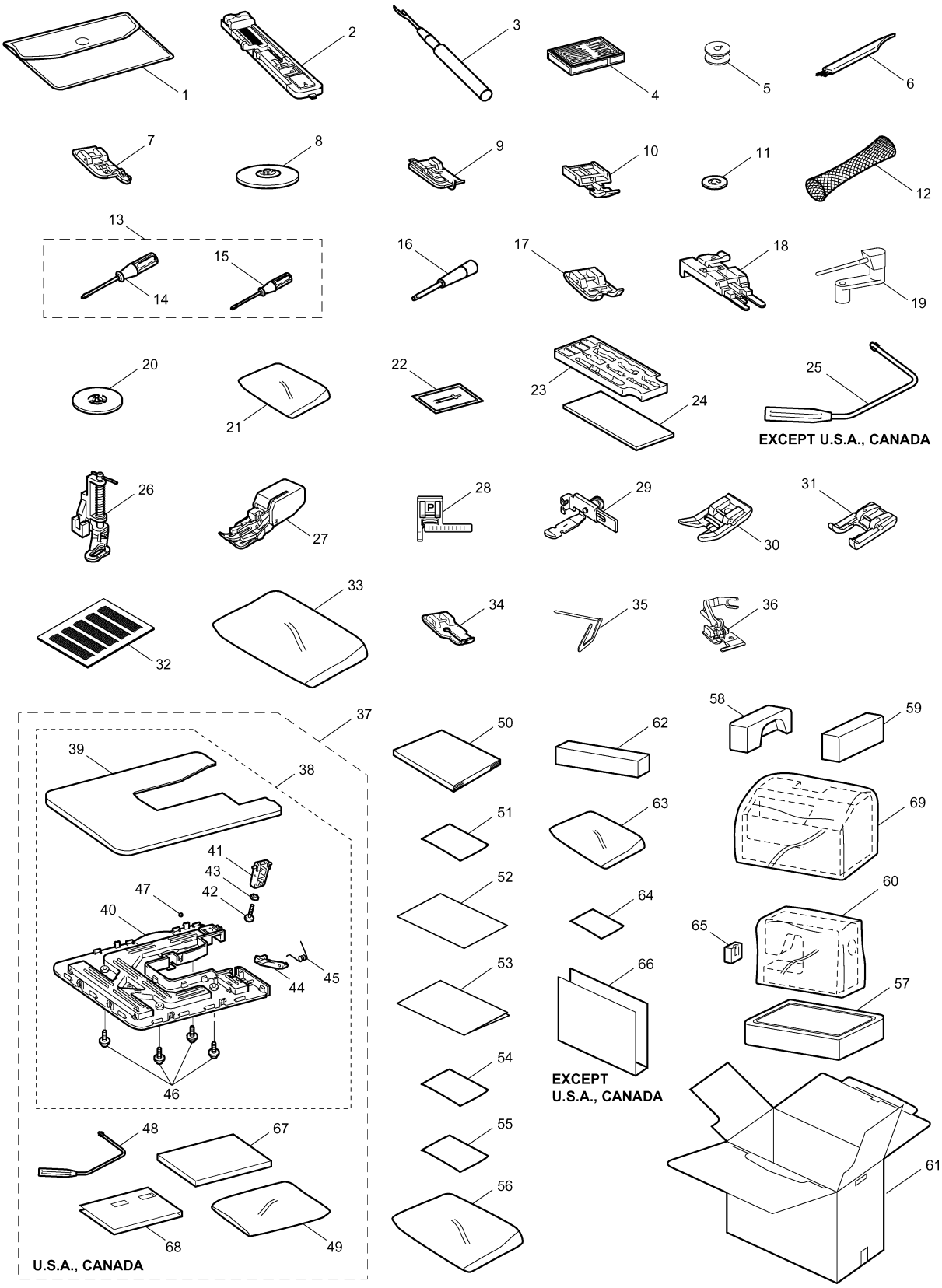
1
2
3
4
5
6
7
8
9
10
11
12
13
14
15
16
17
18
19
20
21
22
23
24
25
EXCEPT U.S.A., CANADA
26
27
28
29
30
31
32
33
34
35
36
37
38
39
40
41
42
43
44
45
46
47
48
49
50
51
52
53
54
55
56
57
58
59
60
61
62
63
64
65
66
67
68
69
EXCEPT
U.S.A., CANADA
U.S.A., CANADA

NEEDLE-PRESSER MODULE

No.	CODE	NAME	REMARKS
1	XC2394121	UPPER UNIT HOLDER	
2	XZ0177021	SHAFT BUSHING ASSEMBLY	
3	052401406	SCREW,PAN (S/P WASHER) M4 × 14	CHG
4	XC2398020	SHAFT BUSHING A	
5	XC2399021	PRESSER BAR BUSHING	
6	136681051	TAPTITE, BIND B M3 × 8	CHG
7	XC5362050	PLATE SPRING	CHG
8	XC2400021	THREAD TAKE-UP COUNTER WEIGHT	
9	012500532	SET SCREW, SOCKET (FT) M5 × 5	
10	XC2401021	UNIT SHAFT	
11	132434050	WASHER	
12	048060346	RETAINING RING, E6	
13	XC6361051	NEEDLE BAR SUPPORTER ASSY	
14	XC2418020	HOOK RELEASE PLATE	
15	060260516	SCREW, BIND M2.6 × 5	
16	XC3446051	RELEASE LEVER	
17	XC3447051	RELEASE LEVER SHAFT	
18	XC3448051	RELEASE LEVER SPRING	
19	137977050	POLYESTER SLIDER	
20	0A2300606	SCREW 3 × 6B	
21	XC3032051	THREADER HOOK ASSY	
22	XA3565021	LINK A ASSY	
23	XA3569021	LINK B	
24	XC2415021	THREAD GUIDE ASSY	
25	XC2419021	SHAFT	
26	000020415	SCREW, BIND M2 × 4	
27	XC2420020	SHAFT	
28	XC2421121	PLATE	
29	060300516	SCREW, BIND M3 × 5	
30	XC2423051	NEEDLE BAR	
31	XC2424021	NEEDLE BAR THREAD GUIDE	
32	X53053052	SCREW SM2.38	
33	XC2426020	NEEDLE THREAD PLATE	
34	XC2427051	NEEDLE BROCK	
35	XC2428021	NEEDLE CLAMP SCREW	
36	014401232	SET SCREW, SOCKET (FT) M4 × 12	
37	X56851051	LOCK NUT	
38	XC2429021	SPRING	
39	XC6300051	NEEDLE BAR CRANK ROD ASSY	
40	132051052	SCREW, FLAT SM3.57-40 × 7 L	
41	012500532	SET SCREW, SOCKET (FT) M5 × 5	
42	XC2434021	NEEDLE THREAD BLOCK	
43	012400432	SET SCREW, SOCKET (FT) M4 × 4	
44	XC2435020	ZIGZAG ADJUSTING NUT	
45	018301032	BOLT,SOCKET M3 × 10	
46	XC2748021	SPRING-Z	
47	XC2436021	NEEDLE HOLDER BROCK	
48	XC2437021	SHAFT ASSY	
49	XC2440021	SHAFT	
50	014300532	SET SCREW, SOCKET (CP) M3 × 5	
51	XC2441021	SPRING	
52	XC6239051	THREAD TAKE-UP LEVER ASSY	
53	XC2443020	THREAD TAKE-UP LEVER LINK	
54	XC2444021	PRESSER BAR	
55	XC2445021	PRESSER BAR CLAMP ASSY	
56	014501032	SET SCREW,SOCKET(CP)M5 × 10	
57	XC4457051	SPRING	
58	XC4458050	PRESSER SPRING SUPPORTER	
59	XC3015051	PRESSER FEED HOLDER ASSY	
60	XA4813051	SCREW	
61	XC3021051	Z FOOT	
62	XC2451021	PRESSER FOOT LIFTER	
63	XC4459051	PRESSER LIFT SHAFT	
64	XC4460051	LIFTER ASSY	
65	XA1860150	WASHER	
66	048040346	RETAINING RING, E4	
67	XC2453021	LEVER GUIDE SHAFT	
68	XC2455021	LEVER A ASSY	
69	XC2458021	LEVER B	
70	XC2459020	CAP	
71	XC2460021	TORSION SPRING	
72	048030346	RETAINING RING, E3	
73	XC2461021	SPRING	
74	XC2462021	LEVER PRESSER PLATE	
75	138433051	TAPTITE, PAN B M3 × 6	CHG
76	XC2463121	BH SWITCH ASSY	
77	XZ0149051	TAPTITE,PAN B 4 × 12	
78	XC2474020	Z ZIGZAG CAM	
79	XC2476021	Z ZIGZAG LEVER ASSY	
80	XC2480020	Z LEVER CUP	
81	XC2481051	MOTOR,PULSE:Z SMJ35-4840-A	CHG
82	X59629051	SCREW, BIND B TITE 3 × 10	CHG
83	XC2483020	T CAM	
84	XC2491021	THREAD RELEASER ASSY	
85	XC2494021	THREAD RELEASE LEVER ASSY	
86	XC4465051	ADJUSTING PLATE ASSY	
87	XC2501121	TENSION RELEASER C	
88	048030346	RETAINING RING, E3	

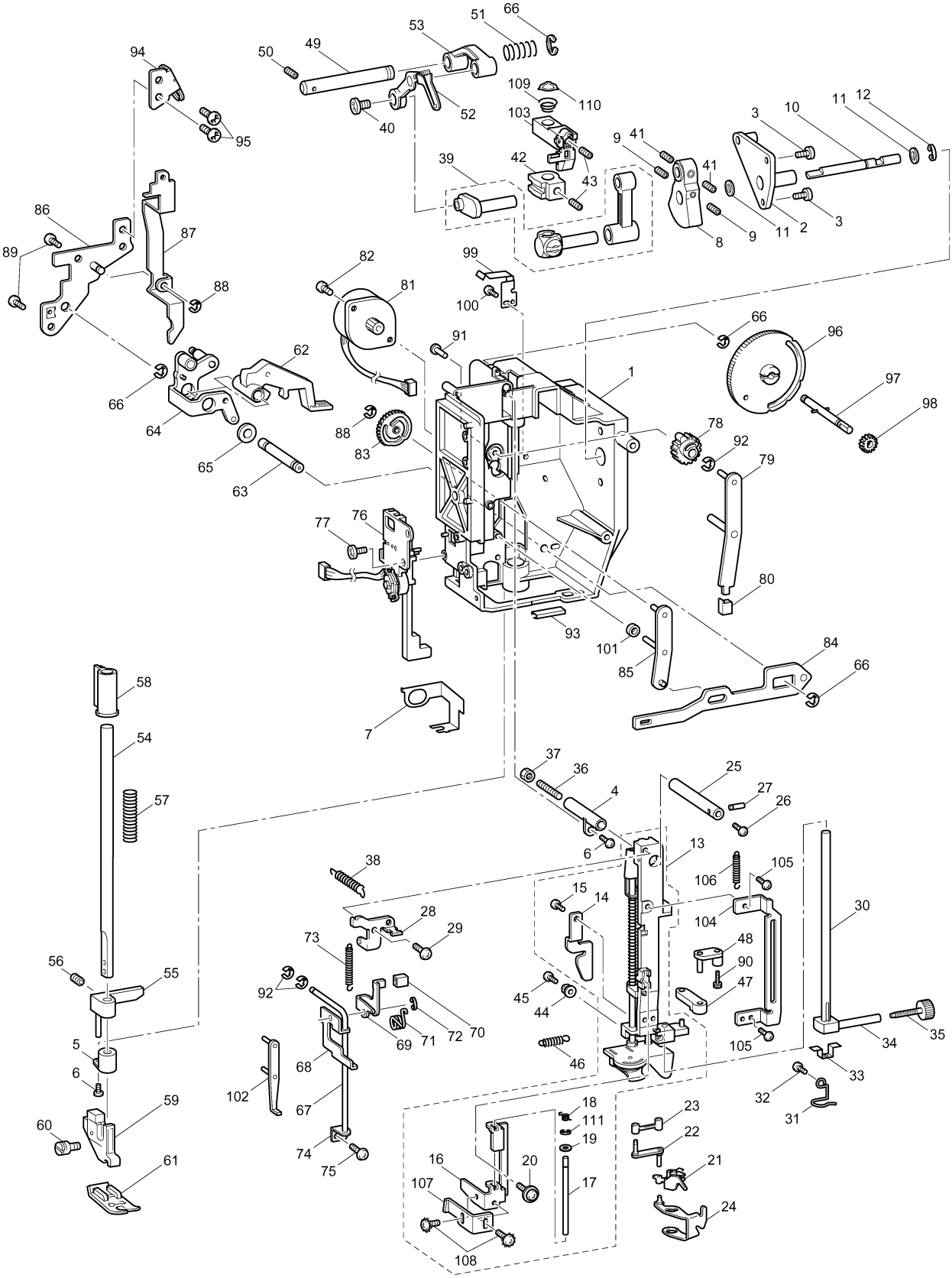

66
51
53
49
50
94
95
40
52
109
110
103
42
43
39
9
41
41
3
10
11
12
8
9
11
2
3
86
87
89
88
82
81
99
100
91
66
96
62
66
64
65
63
88
83
1
97
98
78
92
79
77
76
80
93
101
85
84
66
58
54
57
7
37
36
4
25
27
26
6
13
38
106
105
15
14
104
30
28
29
73
48
90
56
55
92
45
44
47
69
71
72
70
105
34
35
5
6
68
46
33
102
67
32
31
59
60
18
111
19
23
22
74
75
16
20
21
61
107
17
24
108

NEEDLE-PRESSER MODULE

No.	CODE	NAME	REMARKS
89	085411015	TAPTITE, BIND B M4 × 10	
90	XC3037021	SCREW3 × 10	
91	XC2475021	SHAFT	
92	048020346	RETAINING RING, E2	
93	XC3034020	THREAD GUIDE PLATE	
94	XC4467051	WIRE GUIDE PLATE U	
95	060400616	SCREW, BIND M4 × 6	
96	XC4468051	PRESSER DIAL	
97	XC4522051	PRESSER DIAL SHAFT ASSY	
98	XC4471050	PRESSER DIAL GEAR	
99	XC4472051	PLATE SPRING	
100	136681051	TAPTITE, BIND B M3 × 8	CHG
101	XZ0155051	POLYESTER SLIDER	
102	XC6241051	RELEASE PLATE ASSY	
103	XC6245051	NEEDLE BAR HOOK STAND ASSY	
104	XC6251051	RELEASE GUIDE PLATE	
105	060300616	SCREW, BIND M3 × 6	
106	XC6252051	SPRING	
107	XC6253050	RELEASE ADJUSTER	
108	0A6300606	SCREW,PAN(T WASHER)M3 × 6	
109	XC6254051	NEEDLE BAR PRESSER SPRING	
110	XC6255050	WASHER,THRUST	
111	048025346	RETAINING RING, E2.5	
	XC7192051	NEEDLE SUPPLY UNIT ASSY(EUROPE)	ADD
	XC7192052	NEEDLE SUPPLY UNIT ASSY (U.S.A & CANADA)	ADD

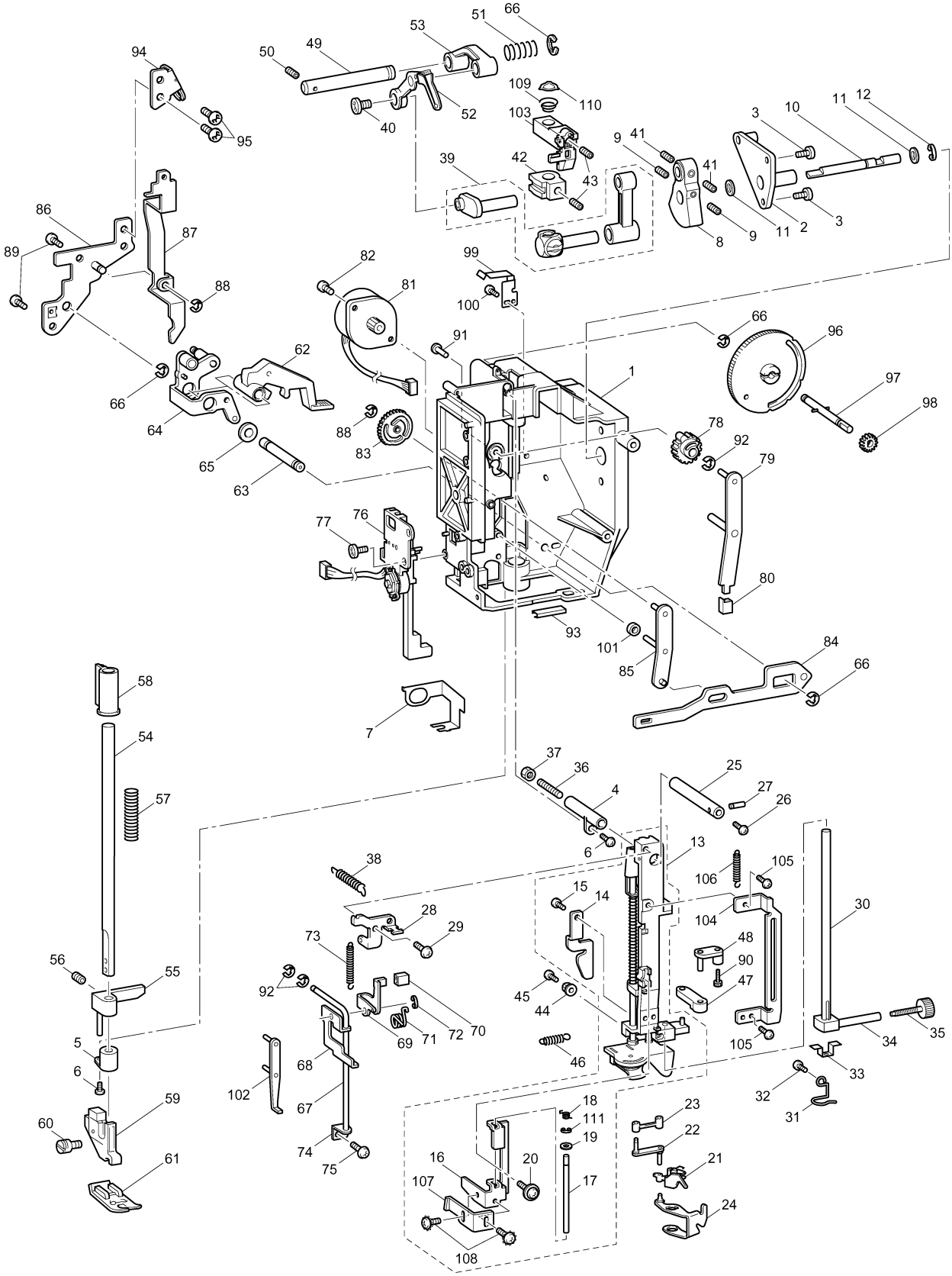

66
51
53
49
50
94
95
40
52
109
110
103
42
43
39
9
41
41
3
10
11
12
8
9
11
2
3
86
87
89
88
82
81
99
100
91
66
96
62
1
97
98
66
64
88
83
78
92
79
65
63
77
76
80
93
101
85
84
66
58
7
54
37
36
4
25
27
26
57
6
13
38
106
105
15
14
104
30
28
29
73
48
90
56
55
92
45
44
47
69
71
72
70
105
34
35
5
68
46
33
6
102
67
32
31
59
18
111
23
60
19
22
74
75
16
20
21
61
107
17
24
108

FEED MODULE

No.	CODE	NAME	REMARKS
1	XC3356151	FEED BASE	CHG
2	XC2510021	FEED BAR	
3	XC2511021	FEED DOG	
4	XC2512021	FEED BAR SHAFT A	
5	048020346	RETAINING RING, E2	
6	XC2516021	FEED ARM A	
7	XC2517021	FEED ARM B ASSY	
8	XC2521021	FEED SUPPORTING PLATE ASSY	
9	048020346	RETAINING RING, E2	
10	048030346	RETAINING RING, E3	
11	137999050	POLYESTER SLIDER	
12	XZ0174021	SPRING	
13	XC2525021	HORIZONTAL FEED SHAFT	
14	048050346	RETAINING RING, E5	
15	X50546050	WASHER,THRUST	
16	XC2527021	FEED ADJUSTER	
17	XC2529020	F GEAR	
18	XC2530021	SPRING	
19	137713050	POLYESTER SLIDER	
20	XC2531021	SPRING	
21	XC2532021	FPM HOLDER ASSY	
22	XC2534021	MOTOR,PULSE:F SMJ35-4840-C	
23	XC2587050	RUBBER	
24	060300516	SCREW, BIND M3 × 5	
25	XC3338021	SCREW3 × 8	
26	018402532	BOLT,SOCKET M4 × 25	
27	XC2537021	SPRING	
28	XC2538021	SPRING	
29	XC2539021	BUSHING SUPPORTER ASSY	
30	060400616	SCREW, BIND M4 × 6	
31	XC2542021	BUSHING PRESSER B	
32	060300516	SCREW, BIND M3 × 5	
33	XC3941051	VERTICAL ADJUSTER SCREW ASSY	
34	XC2546051	M5 NUT	CHG
35	XC2547021	SPRING	
36	XC2549021	VERTICAL FEED SHAFT	
37	XC2550021	SPRING	
38	XC2551020	VERTICAL LEVER	
39	XC2552021	SET SCREW COLLAR	
40	014400432	SET SCREW, SOCKET (CP) M4 × 4	
41	048030346	RETAINING RING, E3	
42	XC2553020	VERTICAL SUPPORTING PLATE	
43	137713050	POLYESTER SLIDER	
44	XC2210051	OUTER ROTALY HOOK ASSY	

No.	CODE	NAME	REMARKS
45	XC2230051	OUTER ROTARY HOOK SHAFT	
46	137805052	SPACER	
47	137976051	WASHER 6	
48	014400632	SET SCREW, SOCKET (CP) M4 × 6	
49	XC2555021	INNER ROTARY HOOK BRACKET ASSY	
50	XZ0181021	STOPPER PLATE BLOCK ASSY	
51	060400516	SCREW, BIND M4 × 5	
52	060300816	SCREW, BIND M3 × 8	
53	XC2562121	LOWER SHAFT B ASSY	
54	X52664050	LOWER SHAFT BUSHING	
55	X51383050	WASHER,THRUST	
56	048060346	RETAINING RING, E6	
57	137768151	SET SCREW COLLAR	
58	014400432	SET SCREW, SOCKET (CP) M4 × 4	
59	XC2566021	BUSHING SUPPORTER A	
60	XC2567021	BUSHING PRESSER A	
61	060401616	SCREW, BIND M4 × 16	
62	XC2569051	NEEDLE PLATE A	
63	XC2570021	STOPPER PLATE	
64	XC2571021	F GEAR STOPPER PLATE	
65	060260316	SCREW, BIND M2.6 × 3	
66	X50487051	SCREW M4	
67	XC2572021	DROP KNOB	
68	XC2573021	SLIDE SHAFT B	
69	XC2574021	SPRING PLATE	
70	X53169050	BAND	
71	060300416	SCREW, BIND M3 × 4	
	XC7191051	FEED SUPPLY UNIT ASSY (EUROPE)	ADD
	XC7191052	FEED SUPPLY UNIT ASSY (U.S.A & CANADA)	ADD

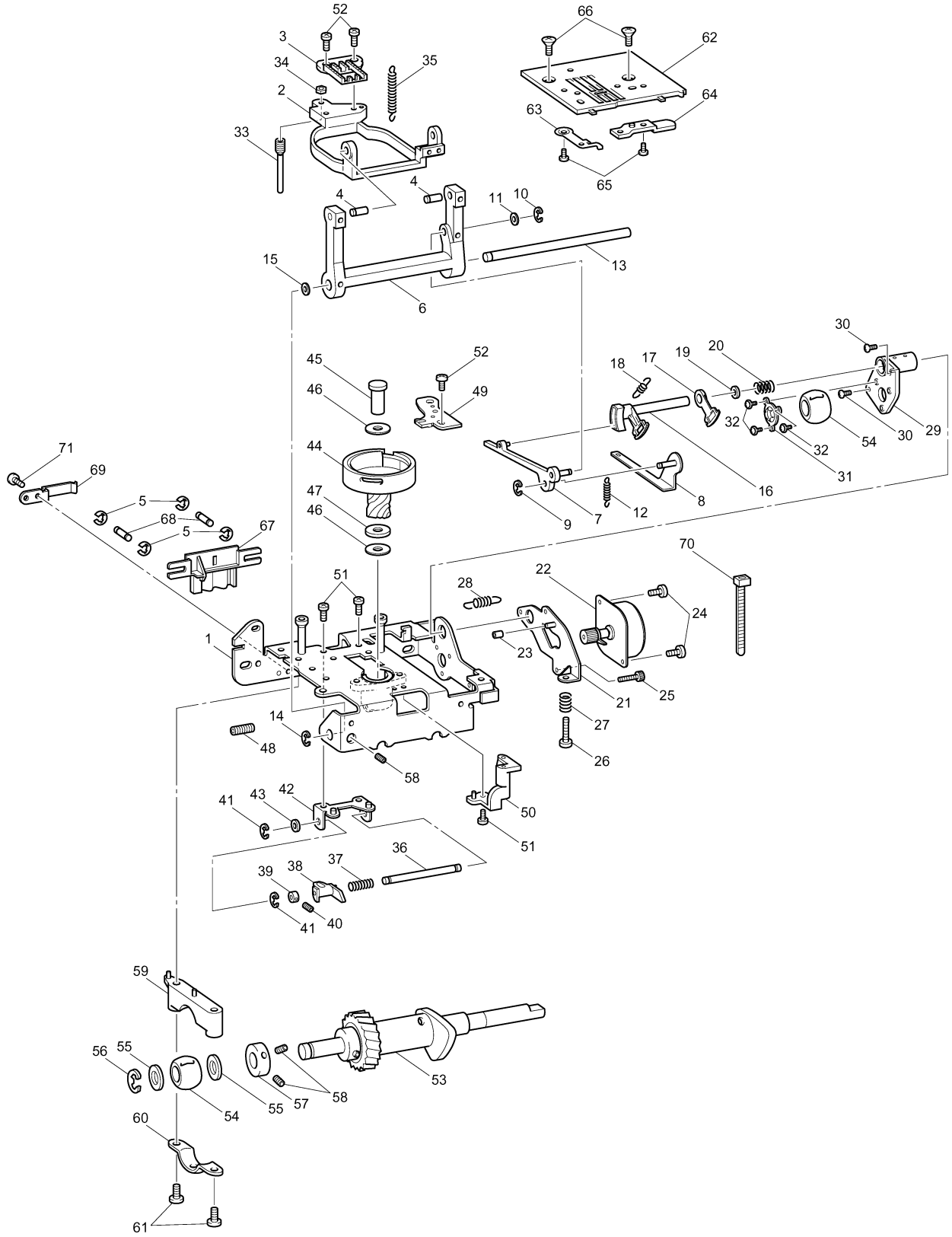
52
3
34
2
33
35
66
62
64
63
65
4
4
11
10
15
13
6
30
45
52
46
49
18
17
19
20
32
32
54
30
29
31
71
69
44
5
68
5
67
47
46
16
8
9
7
12
70
51
28
22
24
1
23
21
25
27
26
14
48
58
50
51
41
43
42
36
37
39
38
41
40
59
56
55
54
55
57
58
53
60
61

THREAD CUTTER MODULE

No.	CODE	NAME	REMARKS
1	XC2576021	THREAD CUTTER FRAME ASSY	
2	XC2579020	SPACER	
3	X80321001	NT LOWER THREAD CUTTER	
4	XC2596021	PRESSER PLATE	
5	XC2597001	PILE 4 × 8	
6	060300416	SCREW, BIND M3 × 4	
7	XC2598020	SPRING PLATE	
8	XC2587050	RUBBER	
9	048030346	RETAINING RING, E3	
10	XC2583021	THREAD HOOK ASSY	
11	137713050	POLYESTER SLIDER	
12	X56731050	WASHER	
13	048040346	RETAINING RING, E4	
14	XC2581021	THREAD CUTTER LEVER	
15	XC2582020	THREAD CUTTER LEVER GEAR	
16	0A4300605	SCREW, PAN (S/P WASHER) M3 × 6	
17	XC2588021	MOTOR HOLDER ASSY	
18	XC2592020	IDLE GEAR A	
19	XC2593020	IDLE GEAR B	
20	X56323021	SPRING	
21	048020346	RETAINING RING, E2	
22	XC2331121	MOTOR PULSE:C SMJ35-4840-B	
23	060300416	SCREW, BIND M3 × 4	
24	XC2594021	COLLAR	
25	060402016	SCREW, BIND M4 × 20	
26	X53169050	BAND	
27	137713050	POLYESTER SLIDER	
28	XZ0147020	DUST COVER	
	XC4480051	THREAD CUTTER SUPPLY ASSY (EUROPE)	ADD
	XC4480052	THREAD CUTTER SUPPLY ASSY (U.S.A & CANADA)	ADD

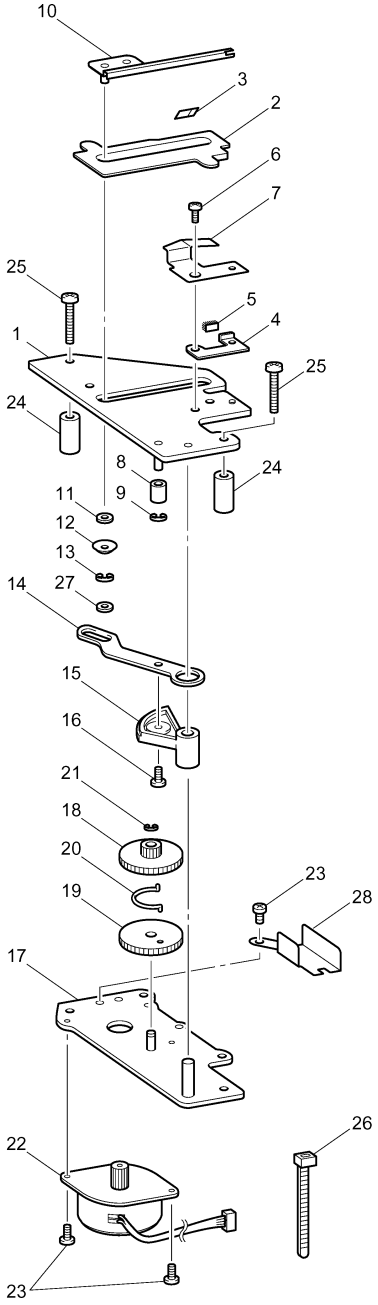
10
3
2
6
7
25
5
4
1
25
24
8
24
11
9
12
13
27
14
15
16
21
18
20
23
28
19
17
26
22
23

NX600
26F03HF882S64