PARTS CATALOGUE FOR

COMPUTERIZED SEWING MACHINE

NC21-SE Model

NV500D
SE270D

7. 2003.
7. 2004.

CONTENTS

(1) PRINCIPAL PARTS 2

(2) UPPER SHAFT / NEEDLE BAR, PRESSER MECHANISM 4

(3) FEED, ROTARY HOOK / THREAD CUTTING / ROTARY HOOK DRIVE MECHANISM 6

(4) BOBBIN WINDER MECHANISM 8

(5) THREAD GUIDE MECHANISM 10

(6) THREAD HOOK MECHANISM 12

(7) ELECTRONIC PARTS / MOTOR UNIT 14

(8) EMBROIDERY UNIT 16

(9) ATTACHMENTS / PACKING MATERIALS / PRINTED MATTER 18

NEEDLE-PRESSER MODULE 22

FEED MODULE 24

THREAD CUTTER MODULE 26

(1) PRINCIPAL PARTS

No.	CODE	NAME	REMARKS
1	XC3469021	BASE COVER B	
2	XC3470021	BASE PLATE B	
3	XC3471021	ADJUSTING SCREW	
4	XC3472021	BASE PLATE RUBBER	
5	085310815	TAPTITE, BIND B M3 × 8	
6	060401216	SCREW, BIND M4 × 12	
7	XC4077021	BASE PLATE RUBBER	CHG
8	XC5265121	BOBBIN WINDER COVER ASSY	040138/149
9	XC3473121	BOBBIN WINDER COVER	040138
10	XC5266021	THREAD GUIDE SEAL	
11	XC4062121	BOBBIN WINDER COVER SUPPORTER	040138
12	XC7682020	BOBBIN WINDER COVER NOTCH	040138
13	XC3675021	THREAD TENSION PLATE	
14	085310815	TAPTITE, BIND B M3 × 8	
15	XC3676021	THREAD TENSION ASSY	
16	0A4300605	SCREW, PAN (S/P WASHER) M3 × 6	
17	XC4212021	THREAD TENSION COVER	
18	XC4574021	THREAD TENSION COVER SEAL	
19	XC3475020	SHAFT FOR BOBBIN WINDER COVER	
20	XC3476021	HANDLE	
21	XC3477021	HANDLE FIXED PLATE	
22	085311015	TAPTITE, BIND B M3 × 10	
23	X80321021	NT LOWER THREAD CUTTER	040083
24	XC3478021	CUTTER COVER	
25	XC3479021	ADJUSTING PLATE	
26	XC3480021	PLATE SPRING	
27	XC4053021	ADJUSTING SCREW	
28	XC5161021	GIZA TITE M4 × 10	CHG
29	XC3854021	LEAD WIRE GUIDE	
30	XC4575021	BOBBIN WINDER SEAL	
31	085310815	TAPTITE, BIND B M3 × 8	
32	XC4806020	ARM CAP	
33	XC4795022	FRONT COVER SUPPLY ASSY	CHG
	XC4795023	FRONT COVER SUPPLY ASSY (U.S.A.)	CHG
	XC8691021	FRONT COVER SUPPLY ASSY (SE270D)	ADD
34	XC3489021	CONNECTER HOLDER	
35	085311015	TAPTITE, BIND B M3 × 10	
36	XC3490021	ASSY:MAIN BODY LEAD WIRE	
37	XC3826021	ES PIN	
38	048020346	RETAINING RING, E2	
39	X52318021	COACHING CLIP CS-2	
40	XC3491021	CONECTER COVER	
41	XC4077021	BASE PLATE RUBBER	CHG
42	XC3493021	BASE COVER A	
43	XC3494021	BASE PLATE A	

No.	CODE	NAME	REMARKS
44	085310815	TAPTITE, BIND B M3 × 8	
45	XC4302021	RUBBER CUSHION PLINTH	
46	XC4077021	BASE PLATE RUBBER	CHG
47	085311015	TAPTITE, BIND B M3 × 10	
48	XC3495021	BASE COVER WASHER	
49	XC3496021	GIZA TITE 5 × 16	CHG
50	XC3497021	FRONT COVER FOR CASSETTE	
51	XC3498021	CASSETTE COVER	
52	XC3499021	COVER LINK PLATE ASSY	
53	XC3502020	LINK HOLD PLATE	
54	XC3503121	LED LAMP HOLDER R ASSY	CHG
55	XC3506021	LED LAMP HOLDER R	
56	085311015	TAPTITE, BIND B M3 × 10	
57	XC3710021	LED COVER	
58	XC9311021	CASSETTE CAUTION SEAL	040156
59	XC5267021	COVER FIXED PLATE	
60	XC3507023	SS BUTTON	
	XC3507022	SS BUTTON (SE270D)	ADD
61	XC3508021	BACKSTITCHING BUTTON	
62	XC3509021	NP BUTTON	
63	XC3510021	THREAD CUTTING BUTTON	
64	XC3511021	SV KEY TOP	
65	XC3513021	BOBBIN WINDER PLATE	
66	XC3514121	BOBBIN PRESSER	040153
67	0A4302506	SCREW, PAN (S/P WASHE) M3 × 25	CHG
68	021300106	NUT, 1 M3	
69	XC3474021	LOWER THREAD PIN	
70	0A0311250	PIN,SPRING ROLL BW3 × 12	
71	060301206	SCREW, BIND M3 × 12	
72	085310815	TAPTITE, BIND B M3 × 8	
73	XC3515021	BASE COVER	
74	XC3517023	FLAP TABLE	
	XC3517022	FLAP TABLE (SE270D)	ADD
75	XC3518021	TABLE BEARING	
76	087310816	TAPTITE, CUP B M3 × 8	
77	XC3519021	SPRING,COMPRESSION	
78	XC3520021	NEEDLE PLATE B ASSY	ADD
79	XC3521021	NEEDLE PLATE B	
80	XC7371021	SLIDE BUTTON	CHG
81	XC2367021	CUTTER COVER	CHG
82	XC2368021	SPRING PLATE	CHG
83	X80321021	NT LOWER THREAD CUTTER	040083
84	XC2369021	NEEDLE PLATE COVER	CHG
85	XC3496021	GIZA TITE 5 × 16	CHG
86	XC5401021	GIZA TITE 3 × 32	CHG

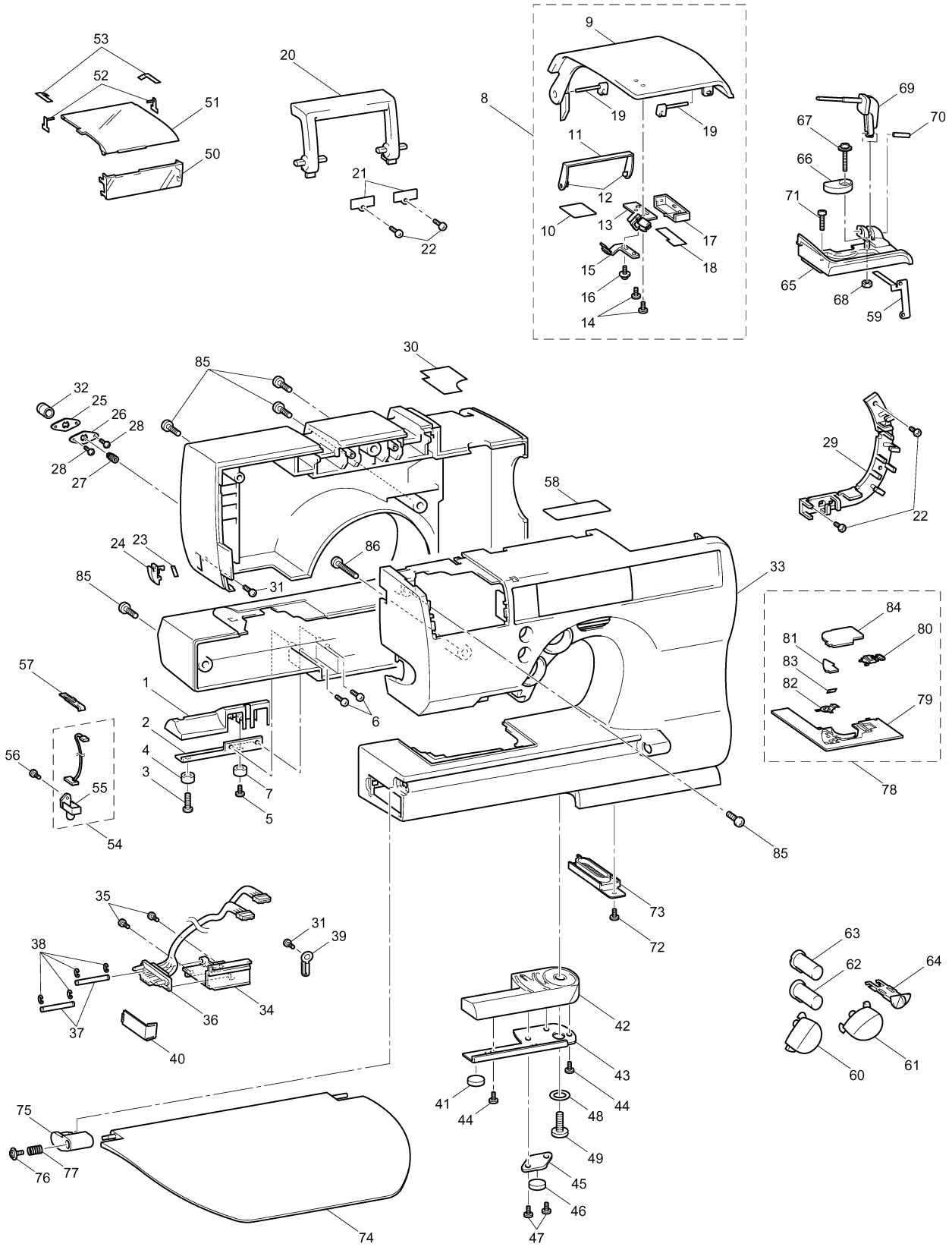
53
52
51
50
20
21
22
9
8
19
19
11
12
10
13
17
18
15
16
14
69
70
67
66
71
65
68
59
30
85
32
25
26
28
28
27
29
22
58
24
23
86
31
33
85
84
80
81
83
82
79
78
57
1
2
4
3
6
7
5
56
55
54
85
35
31
39
38
37
36
34
40
73
72
63
62
64
60
61
42
43
41
44
44
48
49
45
46
47
75
76
77
74

(2) UPPER SHAFT / NEEDLE BAR, PRESSER MECHANISM

No.	CODE	NAME	REMARKS
		UPPER SHAFT MECHANISM	
1	XC5436021	UPPER SHAFT SUPPLY ASSY	
2	XC3529021	PULLEY	
3	048060346	RETAINING RING, E6	
4	XC3532021	TIMING SHUTTER	
5	XC3533021	SPEED SHUTTER	
6	XC2383021	FIXED JOINT	
7	012500532	SET SCREW, SOCKET (FT) M5 × 5	
8	014400432	SET SCREW, SOCKET (CP) M4 × 4	
9	XC3534121	UPPER SHAFT BEARING PRESSER	
10	XC3496021	GIZA TITE 5 × 16	CHG
11	XC3536021	T BELT 453-3GT-6	
12	XC3537121	ASSY:NP PCB-S	CHG
13	085311015	TAPTITE, BIND B M3 × 10	
14	XC3539021	SHUTTER COVER	
15	085411015	TAPTITE, BIND B M4 × 10	
16	XC3540021	TENSION PULLEY ASSY	
		NEEDLE BAR, PRESSER MECHANISM	
17	XC3568151	THREAD HOOK ASSY	
18	XC3573021	CASSETTE GUIDE PLATE	
19	XC3841021	PRESSER PLATE SPRING	
20	060300416	SCREW, BIND M3 × 4	
21	085310615	TAPTITE, BIND B M3 × 6	
22	XC3575021	PRESSER PLATE	
23	XC3576021	UPPER SHAFT BUSHING PRESSER	
24	XC3496021	GIZA TITE 5 × 16	CHG
25	062301205	SCREW, PAN M3 × 12	

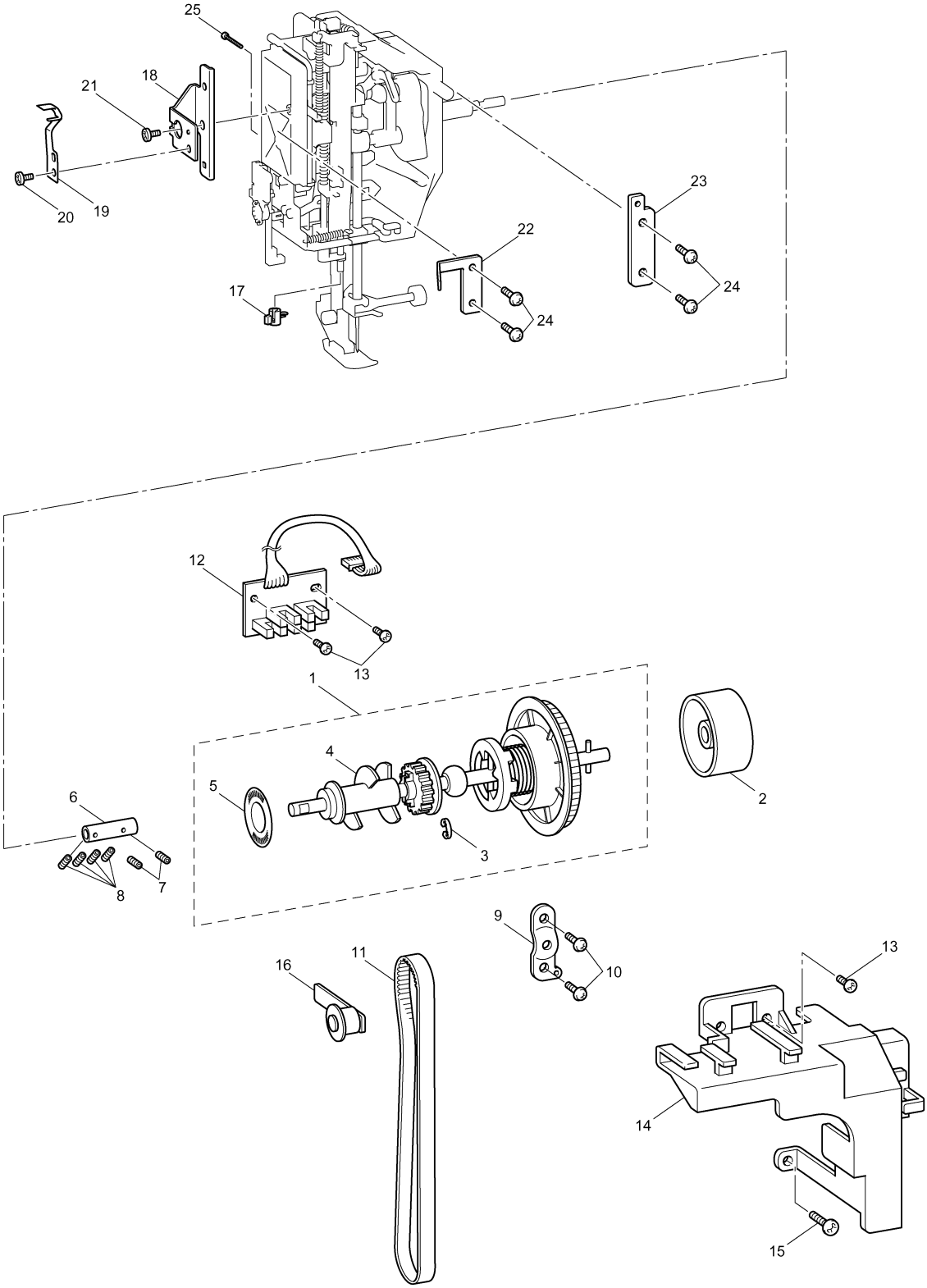
25
18
21
20
19
23
22
24
24
17
12
13
1
4
5
6
3
2
8
7
9
10
16
11
13
14
15

(3) FEED, ROTARY HOOK / THREAD CUTTING / ROTARY HOOK DRIVE MECHANISM

No.	CODE	NAME	REMARKS
		FEED, ROTARY HOOK MECHANISM	
1	XC3153121	INNER ROTARY HOOK ASSY	040234
2	XC3855020	LEAD WIRE GUIDE HOLDER	
3	060300416	SCREW, BIND M3 × 4	
4	XC3586021	DROP LEVER SE	
5	021300306	NUT, 3 M3	
6	XC4075020	DROP SUB LEVER SE	
7	0A6300806	SCREW, PAN (T WASHER) M3 × 8	
8	XC3587021	SLIDE SHAFT A	
9	048020346	RETAINING RING, E2	
10	XC4345021	GIZA TITE 4 × 14	CHG
11	X52800120	BOBBIN	
12	X53169020	BAND	
		THREAD CUTTING MECHANISM	
13	XC9199021	SENSOR HOLDER	040151
14	XC3591121	ASSY:PHOTO TRANSISTOR	CHG
15	0A4300605	SCREW, PAN (S/P WASHER) M3 × 6	
16	060400516	SCREW, BIND M4 × 5	
17	060300516	SCREW, BIND M3 × 5	
		ROTARY HOOK DRIVE MECHANISM	
18	XC3594021	LOWER SHAFT A	
19	XC3595021	TIMING PULLEY D	
20	014500532	SET SCREW, SOCKET (CP) M5 × 5	
21	XC3596021	ECCENTRIC SHAFT BUSHING	
22	X51383020	WASHER,THRUST	
23	048060346	RETAINING RING, E6	
24	137768121	SET SCREW COLLAR	
25	014400432	SET SCREW, SOCKET (CP) M4 × 4	
26	XC2602051	JOINT	
27	012500532	SET SCREW, SOCKET (FT) M5 × 5	
28	XC2602051	JOINT	
29	012500532	SET SCREW, SOCKET (FT) M5 × 5	
30	XC3597021	LOWER SHAFT BUSHING PRESSER	
31	XC3496021	GIZA TITE 5 × 16	CHG
32	XC2603050	DISK	

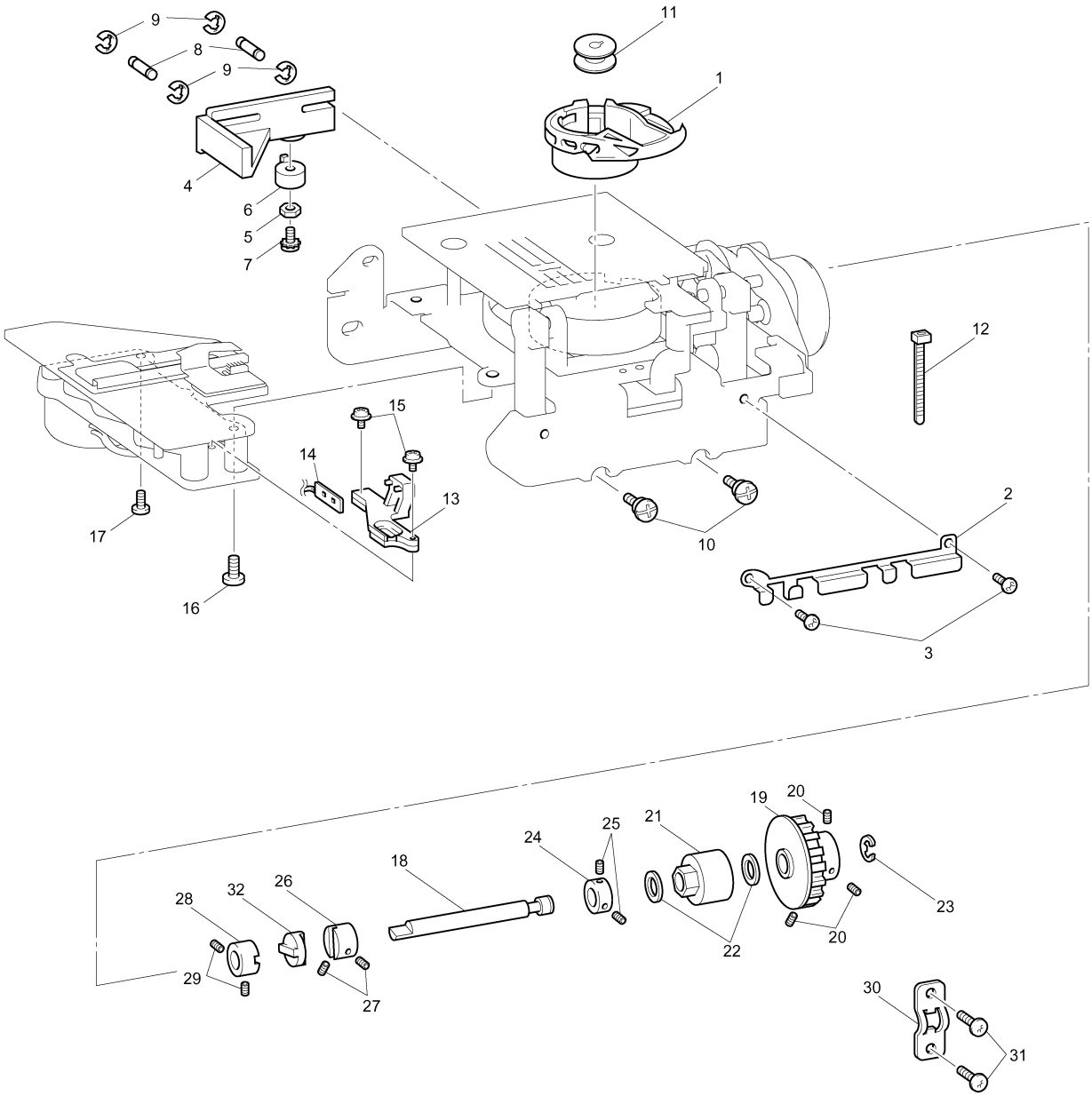
9
8
9
11
1
4
6
5
7
12
15
14
13
17
16
10
2
3
19
20
21
25
24
18
23
28
32
26
22
20
29
27
30
31

(4) BOBBIN WINDER MECHANISM

No.	CODE	NAME	REMARKS
1	XC3600021	BOBBIN WINDER ASSY HOLDER	
2	XC3601221	BW SHAFT HOLDER ASSY	CHG
3	XC4076020	RUBBER RING	
4	XC4063021	BOBBIN WINDER SHAFT SPRING	
5	XC4078121	BOBBIN BASE	
6	XA5877021	BOBBIN THREAD CUTTER HOLDER	CHG
7	X80321021	NT LOWER THREAD CUTTER	040083
8	XA2862021	BOBBIN WINDER SHAFT STOPPER	CHG
9	060300616	SCREW, BIND M3 × 6	
10	XZ0070021	BOBBIN WINDER SPRING	
11	XC3048021	ASSY:BWSW-S	
12	XC2614021	SW ADJUST PLATE	CHG
13	XC4137021	LEAD WIRE HOLDER	
14	XC3588021	GIZA TITE 4 × 12	CHG

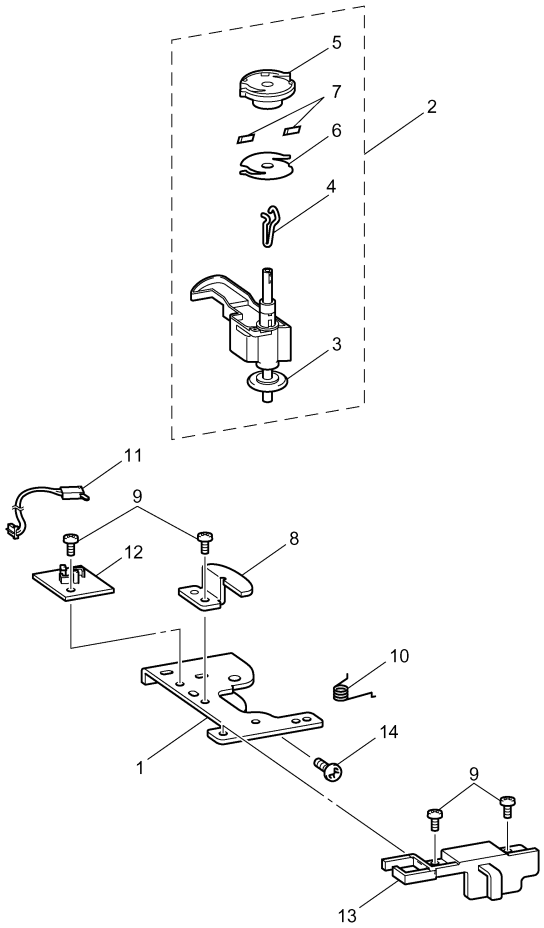
5
7
2
6
4
3
11
9
8
12
10
14
1
9
13

(5) THREAD GUIDE MECHANISM

No.	CODE	NAME	REMARKS
1	XC3605021	THREAD TENSION HOLDER ASSY	
2	XC3610021	THREAD TENSION SHAFT	
3	XC3611021	SPRING COVER SHAFT	
4	XC3612021	THREAD TAKE-UP SPRING	
5	XC3613020	THREAD TAKE-UP SPRING COVER	
6	XA0083051	TENSION DISC A	
7	XC2626021	TENSION DISC B	CHG
8	109763023	WASHER	CHG
9	XC3614021	THREAD RELEASE PLATE A	
10	XA1388021	TENSION DISC WASHER	CHG
11	XC3615021	THREAD TENSION SPRING	
12	XC3616021	THREAD TENSION ADJUSTING SCREW	
13	XC3617021	TENSION CONTROL NUT	
14	XC3618021	LINK ARM ASSY	
15	XC3621022	THREAD TENSION DIAL	
16	XC3623021	THREAD TENSION DIAL SHAFT	
17	137991021	SPRING WASHER	CHG
18	025040133	WASHER, PLAIN S 4	
19	048030346	RETAINING RING, E3	
20	XC3624021	THREAD RELEASE PLATE B	
21	XC3625021	THREAD RELEASE PLATE C	
22	XC3626021	THREAD RELEASE PLATE D	
23	XC3627021	SPRING	
24	XC3522021	SPRING GUIDE ASSY	
25	060300416	SCREW, BIND M3 × 4	
26	XC3630021	THREAD SENSOR SHUTTER	
27	048040346	RETAINING RING, E4	
28	XC3816021	CASSETTE HOLD PLATE	
29	XC3817021	SPRING	
30	XC3647021	THREAD HOOK LINK C ASSY	
31	XC4036021	DAMPER HOLDER ASSY	
32	XC4039021	OIL DAMPER	
33	XC5162021	SCREW, BIND M2 × 7	
34	XC4213020	GEAR A	
35	XC4214021	DAMPER GEAR SHAFT	
36	XC4215020	GEAR B	
37	048020346	RETAINING RING, E2	
38	XC4216020	SPACER	
39	XC4040121	DAMPER HOLDER SPRING	
40	XC6055021	SCREW, BIND M3 × 3	
41	XC3651121	LED LAMP L ASSY	CHG
42	XC3655021	LED LAMP HOLDER L	
43	XC3656121	ASSY:UP THREAD PCB	CHG
44	XC3659021	ASSY:CASSETTE SWITCH	
45	XC3661121	CASSETTE SWITCH HOLDER	
46	060260316	SCREW, BIND M2.6 × 3	
47	XC4041021	ASSY:PFSW-S	
48	XC3662021	PRESSER SWITCH HOLDER	
49	085411015	TAPTITE, BIND B M4 × 10	
50	XC3663021	CASSETTE RELEASE BUTTON	
51	XC3632021	SUPPORTING PLATE ASSY	
52	XC3926021	LINK STOPPER	
53	0A4300506	SCREW, PAN (S/P WASHER) M3 × 5	
54	026030135	WASHER, PLAIN S 3	
55	048020346	RETAINING RING, E2	
56	XC3636021	SLIDE PLATE ASSY	
57	XC3641021	THREAD HOOK LINK A	
58	XC3642021	SPRING	
59	XC3643021	THREAD HOOK LINK B ASSY	
60	XC5282021	SPRING	
61	XC3525021	LINK D GUIDE	
62	060260316	SCREW, BIND M2.6 × 3	
63	025040133	WASHER, PLAIN S 4	CHG
64	018300636	BOLT, SOCKET M3 × 6	

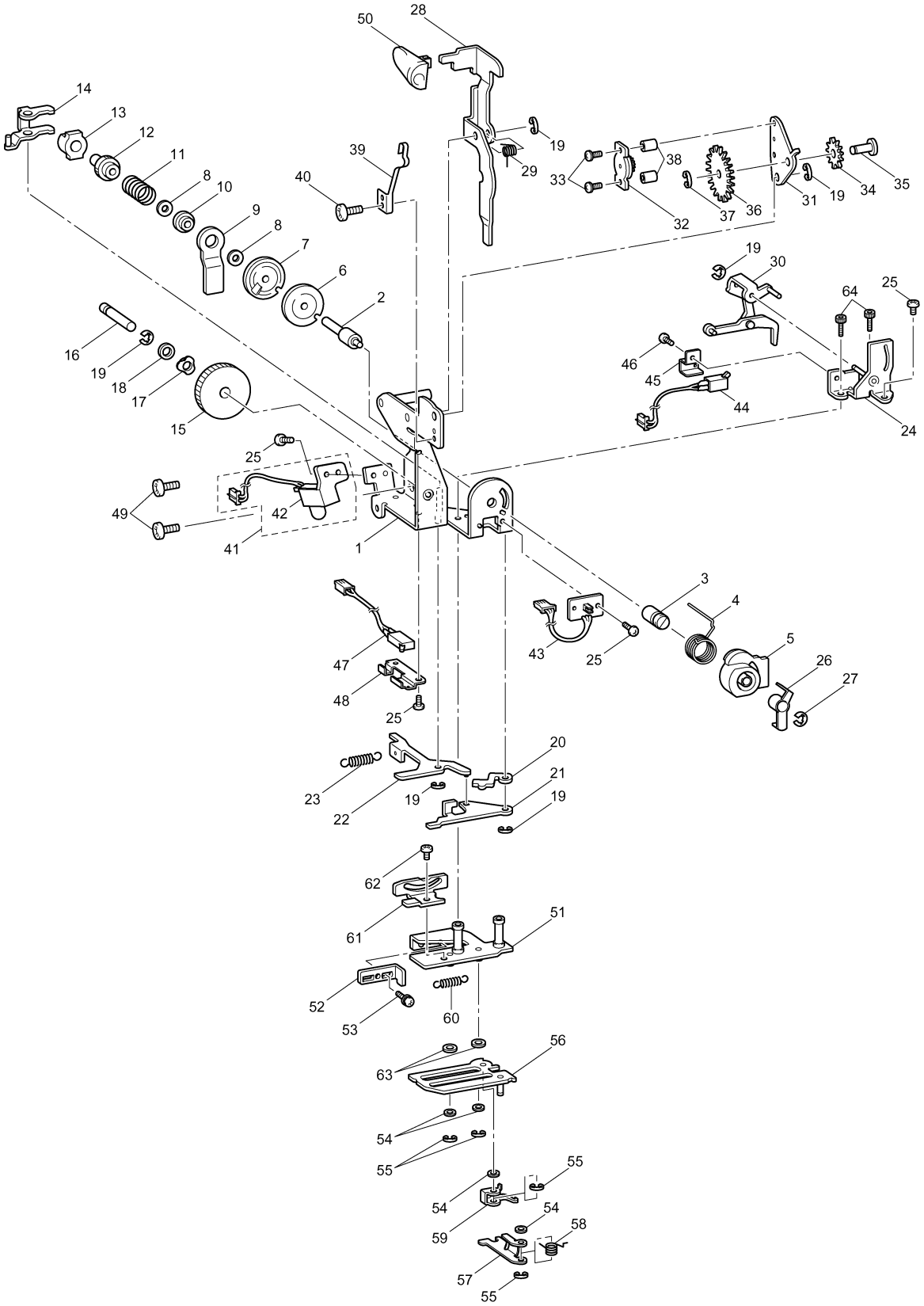
50
28
14
13
12
11
8
10
9
8
7
6
2
39
40
19
29
33
38
32
37
36
31
19
34
35
19
30
64
25
46
45
44
24
16
19
18
17
15
25
49
42
41
1
3
4
5
26
27
47
48
25
43
25
20
21
19
23
22
19
62
61
51
52
53
60
56
63
54
55
55
54
59
54
58
57
55

(6) THREAD HOOK MECHANISM

No.	CODE	NAME	REMARKS
1	XC3664021	THREAD CASSETTE ASSY	
2	XC3673021	SPOOL PRESSER	
3	XC6312021	THREAD GUIDE BASE SUPPLY ASSY	
4	052300606	SCREW, PAN (S/P WASHER) M3 × 6	
5	025030236	WASHER, PLAIN M 3	
6	060300416	SCREW, BIND M3 × 4	
7	060300516	SCREW, BIND M3 × 5	
8	XC3734021	THREAD GUIDE BASE SUPPORTER	
9	XC3735021	THREAD TAKE-UP LEVER GUIDE A	
10	XC2597001	PILE 4 × 8	
11	XC3736021	THREAD TAKE-UP LEVER GUIDE B	
12	XC3737021	THREAD TAKE-UP LEVER GUIDE C	
13	XC4132121	PILE HOLDER	
14	XC4133021	PILE HOLDER CAP	
15	XC4134001	PILE 10 × 6	
16	060260316	SCREW, BIND M2.6 × 3	
17	XA5246021	SPRING	
18	085411015	TAPTITE, BIND B M4 × 10	

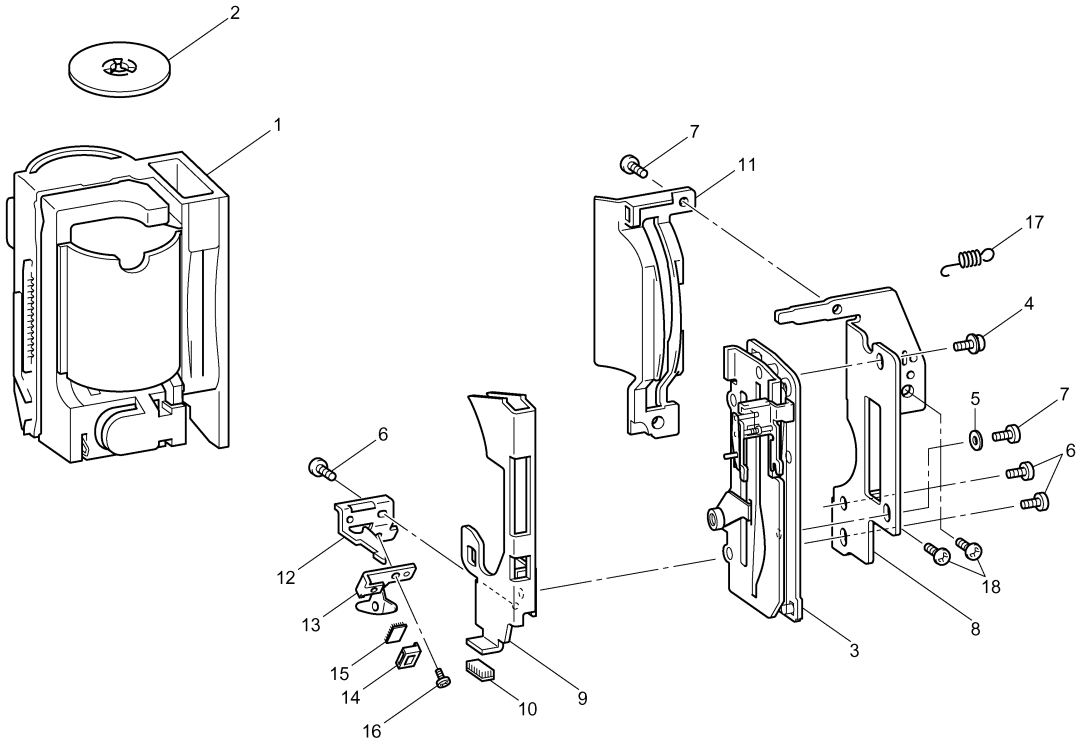
2
1
7
11
17
4
5
7
6
6
12
13
15
14
16
10
9
3
8
18

(7) ELECTRONIC PARTS / MOTOR UNIT

No.	CODE	NAME	REMARKS
		ELECTRONIC PARTS	
1	XC6767021	MAIN PCB SUPPLY ASSEMBLY	CHG
	XC8692021	MAIN PCB SUPPLY ASSEMBLY (SE270D)	ADD
2	XC6326023	TOUCH PANEL SUPPLY ASSY	
	XC6326027	TOUCH PANEL SUPPLY ASSY (SE270D)	ADD
3	085310815	TAPTITE, BIND B M3 × 8	
4	XC6333022	SSVR PCB SUPPLY ASSEMBLY	
	XC6333021	SSVR PCB SUPPLY ASSEMBLY (SE270D)	ADD
5	XC3751021	MINI CLAMP:UAMS-02	
6	085311015	TAPTITE, BIND B M3 × 10	
7	XC6334022	MOTOR PCB SUPPLY ASSEMBLY	
8	XC3785021	FLEXIBLE FLATCABLE:SML2CD-45AD	
9	XC6335021	CARD PCB SUPPLY ASSEMBLY	
10	XC6062021	FC JACK SUPPLY ASSY	
11	XC5409021	FERRITE CORE:FSRB140140RNB00T	
12	XC3795021	ASSY:MOTOR PCB LEAD WIRE A	
13	XC3796021	ASSY:MOTOR PCB LEAD WIRE B	
14	X51271021	NUT	CHG
15	X53169020	BAND	
16	XC4048021	ASSY:GROUND LEAD WIRE	
17	060300416	SCREW, BIND M3 × 4	
18	XC5373021	INSULATOR SHEET	
19	XC6327021	POWER PCB SUPPLY ASSY	
20	XC3787022	BREAK COVER	
21	XC4717121	ASSY:INLET UL (U.S.A., CANADA)	
	XC3788121	ASSY:INLET	
22	085311015	TAPTITE, BIND B M3 × 10	
23	XC3588021	GIZA TITE 4 × 12	CHG
24	XC6052021	POWER SUPPLY CORD:UL CSA-LF (U.S.A., CANADA)	CHG
	XA0070121	POWER SUPPLY CORD (Europe)	CHG
	X59354121	POWER SUPPLY CORD -BS (U.K.)	CHG
	XC9548021	POWER SUPPLY CORD : SAA-LF (AUSTRALIA, NEW ZEALAND)	040186
		MOTOR UNIT	
25	XC6912021	MAIN MOTOR SUPPLY ASSY	CHG
26	XC3803020	MOTOR FAN	
27	XC3804121	MOTOR HOLDER	
28	0A5301006	SCREW, PAN (S/P WASHER) M3 × 10	
29	XC3805021	GIZA TITE 5 × 16	CHG
30	XC3806121	TIMING BELT 372-2GT-6	CHG
31	XC6651121	FOOT CONTROLLER:FC-313-81-LF	
	XD0496021	FOOT CONTROLLER:FC-313-LF-EU	050034

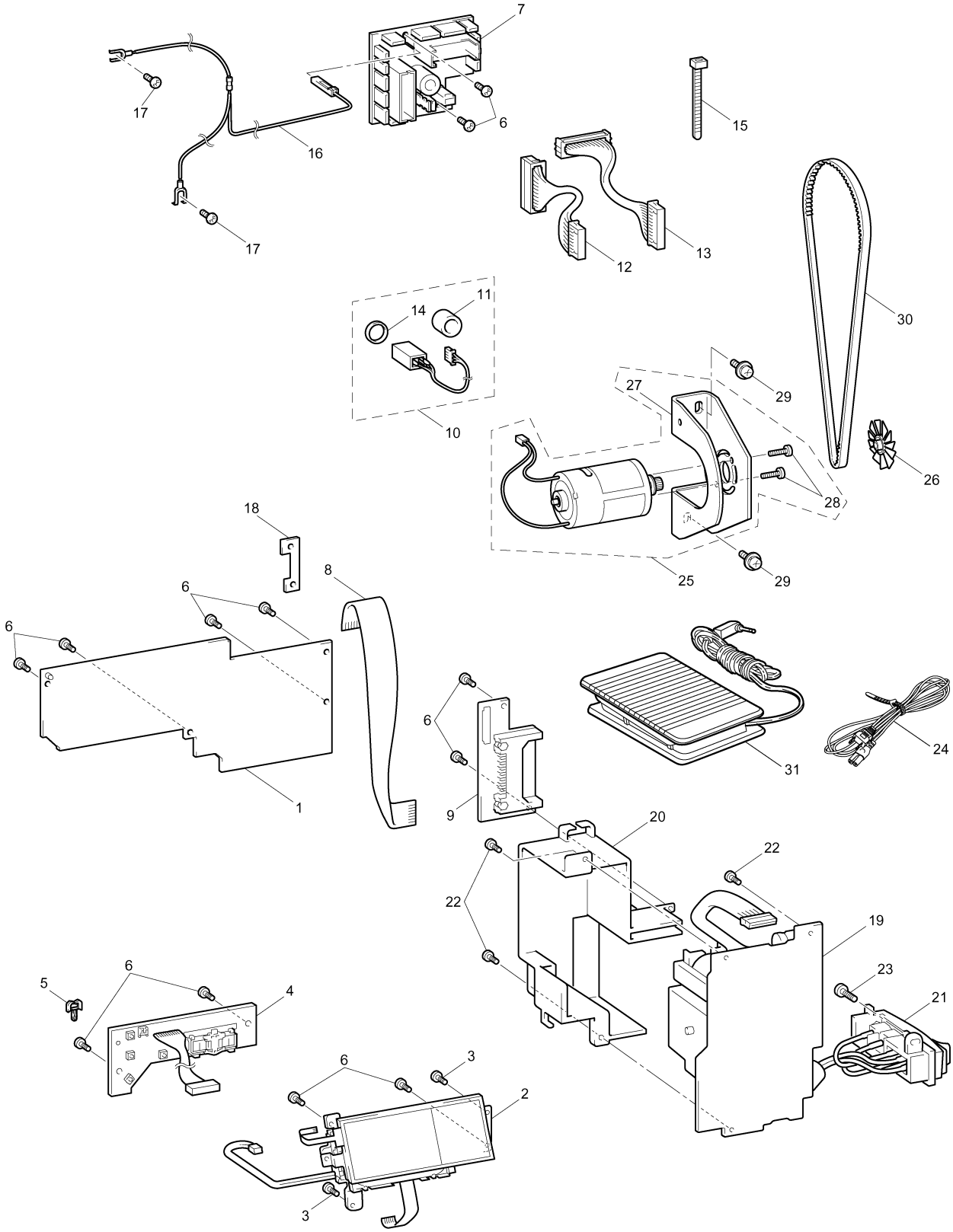
7
17
6
15
16
17
12
13
11
14
30
10
27
29
26
28
18
25
29
8
6
6
6
31
24
1
9
20
22
22
19
23
5
6
4
21
6
3
2
3

(8) EMBROIDERY UNIT

No.	CODE	NAME	REMARKS
1	XC3807021	MAIN FRAME ASSEMBLY	
2	XC4153020	X GEAR	
3	048030346	RETAINING RING, E3	
4	XC4154020	X DRIVING GEAR	
5	X53330020	WASHER	
6	X58715021	T BELT 40S2M400	
7	048060346	RETAINING RING, E6	
8	XA5308021	X TENSION PULLEY ASSY	CHG
9	XA6907021	SCREW 4 × 8	CHG
10	XC3809021	X CARRIAGE GUIDE PLATE ASSY	
11	XA5314020	CORD GUIDE	CHG
12	XC3811021	MOTOR,PULSE:Y SMJ35-4823-C	
13	052300606	SCREW, PAN (S/P WASHER) M3 × 6	
14	XA5316021	X GUIDE SHAFT	
15	XA5317120	X SLIDER	CHG
16	XA5318120	X BELT PRESSER	
17	0A4400806	SCREW, PAN (S/P WASHER) M4 × 8	
18	XC5350020	X SHUTTER	
19	XC3825021	ASSY:EMB UNIT LEAD WIRE	
20	XC3812121	ASSY:X SENSOR PCB	CHG
21	000020415	SCREW, BIND M2 × 4	
22	XC3815021	MOTOR,PULSE:X SMJ40-4888-A	
23	0A4300506	SCREW, PAN (S/P WASHER) M3 × 5	
24	XA5324121	X CARRIAGE ASSY	
25	XC4155020	Y GEAR	
26	048020346	RETAINING RING, E2	
27	XC4156020	Y DRIVING GEAR	
28	XA5330021	T BELT 40S2M316	
29	XA6151021	Y TENSION PULLEY ASSY	CHG
30	XA5338021	Y CARRIAGE	
31	XC5287121	NOTCHED SPRING	
32	XA5340121	Y GUIDE SHAFT	
33	103810022	WASHER, WAVE SPRING	CHG
34	048040346	RETAINING RING, E4	
35	XA5341020	Y SHUTTER	
36	XA5342120	Y SLIDER	
37	XA8390021	SCREW	CHG
38	XC3818121	ASSY:Y SENSOR PCB	CHG
39	XA5346020	CORD HOLDER	CHG
40	060300416	SCREW, BIND M3 × 4	
41	087411416	TAPTITE, CUP B M4 × 14	
42	XC2133025	CARRIAGE COVER	CHG
43	XC3821022	ES COVER-U	
44	XC3823021	ES COVER-D	
45	X59853020	RUBBER CUSHION	
46	XA1899021	SPRING	
47	XC3824021	HANDLE	
48	085311215	TAPTITE, BIND B M3 × 12	
49	XA5352020	CORD PRESSER	
50	085310815	TAPTITE, BIND B M3 × 8	
51	XC3827023	ES UNIT COVER (NV500D)	
52	XA6281020	Y PRESSER PLATE	
53	XA6334020	SHUTTER PRESSER PLATE	
54	XA6152021	ROLLER ASSY	CHG
55	XC5001021	LEAD WIRE ASSY, YPM	ADD
56	X53169020	BAND	

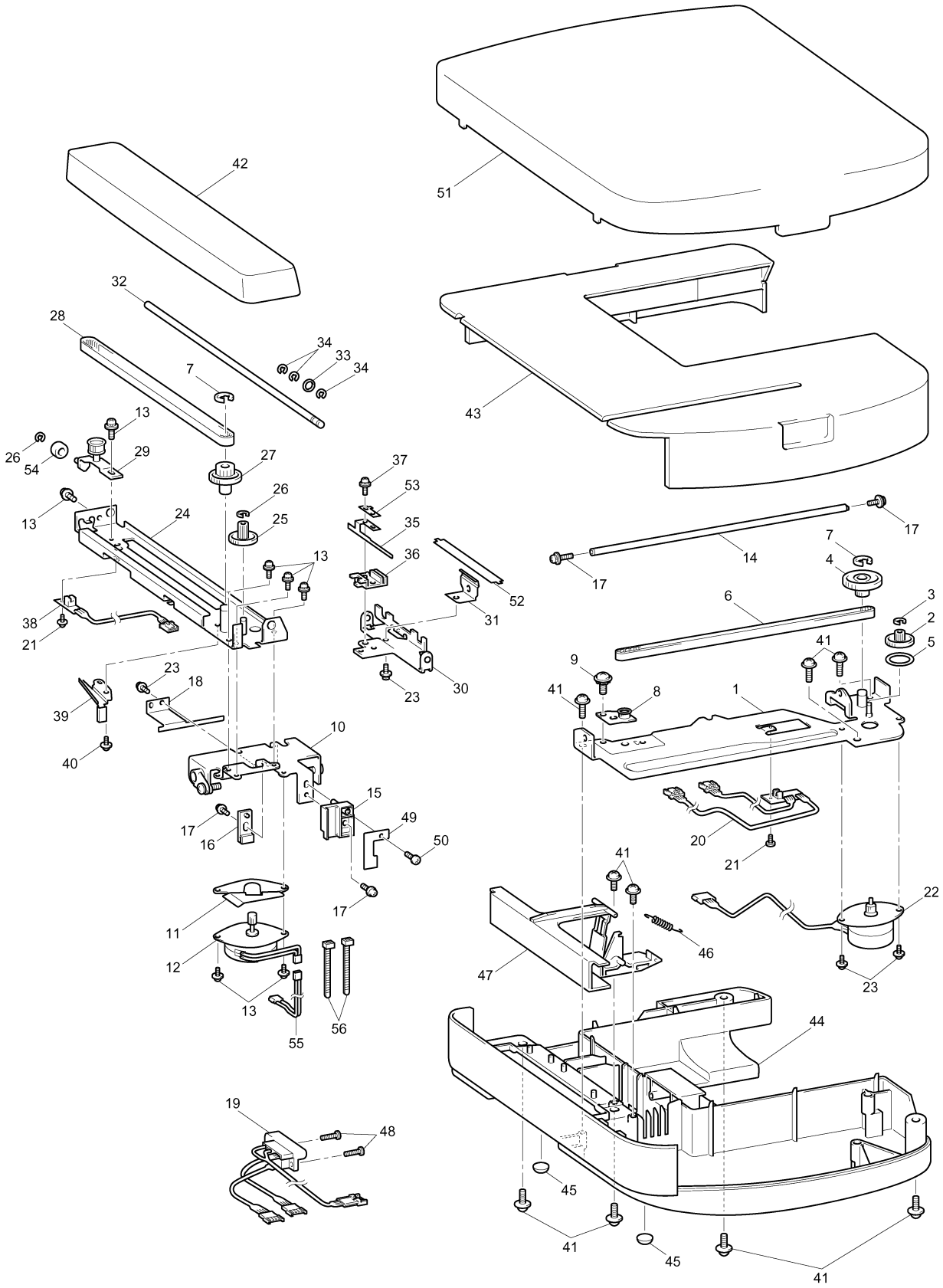
42
51
32
28
34
33
34
7
43
13
26
54
29
27
37
53
26
13
24
25
35
13
36
17
14
17
7
4
52
6
3
2
38
31
21
41
5
9
23
18
41
8
1
39
23
30
10
40
15
49
17
16
50
20
21
41
22
17
11
46
12
47
23
13
56
55
44
19
48
45
41
45
41

(9) ATTACHMENTS / PACKING MATERIALS / PRINTED MATTER

No.	CODE	NAME	REMARKS
		ATTACHMENTS	
1	XC2691021	BH PRESSER FOOT ASSY	CHG
2	XC3098051	OVERCASTING STITCH FOOT ASSY	
3	X53840351	TRANSPARENCY PRESSER FOOT	
4	XC3829021	EMBROIDERY PRESSER ASSEMBLY	
5	XC4051051	BLIND STITCH FOOT ASSY	
6	X59370051	ZIPPER FOOT	
7	X59375151	BUTTON SEWING FOOT	
8	XA5353102	ENBROIDERY FRAME S2M	
9	X56373101	THUMB SCREW	
10	X59422001	WASHER	
11	XA6982001	NUT	
12	021300106	NUT, 1 M3	
13	XA5590121	EMBROIDERY SHEET S2M ASSY	
14	XA5523020	NET	CHG
15	X52800120	BOBBIN	
16	X54243001	SEAM RIPPER	
17	X58358021	Z NEEDLE ASSY	CHG
18	X59296121	TWIN NEEDLE (1PC)	CHG
19	X59476021	CLEANING BRUSH	CHG
20	XC4237021	DRIVER ASSY	
21	135793001	PUNCH	
22	XC1807121	SCISSORS	
23	XC4551020	NEEDLE EXCHANGE TOOL	
24	XC5370023	POUCH UNIT (NV500D)	CHG
25	X57367021	BAG,135 × 150 (NV500D)	CHG
26	130012054	SPOOL PRESSER A	
27	130013154	SPOOL PRESSER B	
28	XA5752021	SPOOL CAP (SMALL)	
29	XC3834021	SPOOL STAND ASSY	
30	XC3664021	THREAD CASSETTE ASSY (NV500D)	CHG
31	XC3673021	SPOOL PRESSER (NV500D)	CHG
32	XC4530023	SEWING MACHINE CASE UNIT (NV500D)	CHG
33	XC4549050	GRID SHEET SET (NV500D)	CHG
34	XC4487021	ACCESSORY BAG (SE270D)	ADD
35	XC4842022	DUST COVER ASSY (SE270D)	ADD
36	XA9940021	TOUCH PEN (SE270D)	ADD
		PACKING MATERIALS	
37	XC3845021	SF ASSY S10	
38	XC6031021	PRESSER LEVER FIXING	
	XC6031022	PRESSER LEVER FIXING (KOREA)	040223
39	XC5489021	REINFORCEMENT CARTON	
40	XC6999021	BAG,520 × 400	
41	X60679021	BAG,450 × 400H (EMBROIDERY UNIT)	CHG
42	XC5400021	BAG,320 × 155 (FLAP TABLE)	
43	XC6395023	CARTON ASSY (CANADA)	CHG
	XC6395021	CARTON ASSY (U.S.A.)	CHG
	XC6395022	CARTON ASSY	
	XC8552021	COLAR CARTON ASSY (SE270D)	ADD
44	XC9063020	ES UNIT SPACER D (SE270D)	ADD
		PRINTED MATTER	
	XC6377021	INSTRUCTION MANUAL ASSY	040147
	XC6369021	INSTRUCTION BOOK (English)	
	XC6375021	QUICK REFERENCE GUIDE	
	XC6376021	INSTRUCTION BOOK:DISNEY	
	XC6475021	LANGUAGE SETTING SHEET	
	XC8946021	WARRANTY CARD C (U.S.A.)	040133
	130800021	BAG,220 × 310	
	XC6378021	INSTRUCTION MANUAL ASSY	040147
	XC6369021	INSTRUCTION BOOK (English)	
	XC6371021	INSTRUCTION BOOK (French)	
	XC6375021	QUICK REFERENCE GUIDE	
	XC6376021	INSTRUCTION BOOK:DISNEY	
	XC6475021	LANGUAGE SETTING SHEET	
	181401172	INSERTION WARRANTY COUPON	
	130800021	BAG,220 × 310	
	XC6379021	INSTRUCTION MANUAL ASSY	040147
	XC6372021	INSTRUCTION BOOK (German)	
	XC6375021	QUICK REFERENCE GUIDE	
	XC6376021	INSTRUCTION BOOK:DISNEY	
	XC6475021	LANGUAGE SETTING SHEET	
	130800021	BAG,220 × 310	
	XC6380021	INSTRUCTION MANUAL ASSY	040147
	XC6369021	INSTRUCTION BOOK (English)	
	XC6375021	QUICK REFERENCE GUIDE	
	XC6376021	INSTRUCTION BOOK:DISNEY	
	XC6475021	LANGUAGE SETTING SHEET	
	XC6402021	WARRANTY CARD (U.K.)	
	130800021	BAG,220 × 310	
	XC6381021	INSTRUCTION MANUAL ASSY	040147
	XC6371021	INSTRUCTION BOOK (French)	
	XC6373021	INSTRUCTION BOOK (Dutch)	
	XC6375021	QUICK REFERENCE GUIDE	
	XC6376021	INSTRUCTION BOOK:DISNEY	
	XC6475021	LANGUAGE SETTING SHEET	
	130800021	BAG,220 × 310	

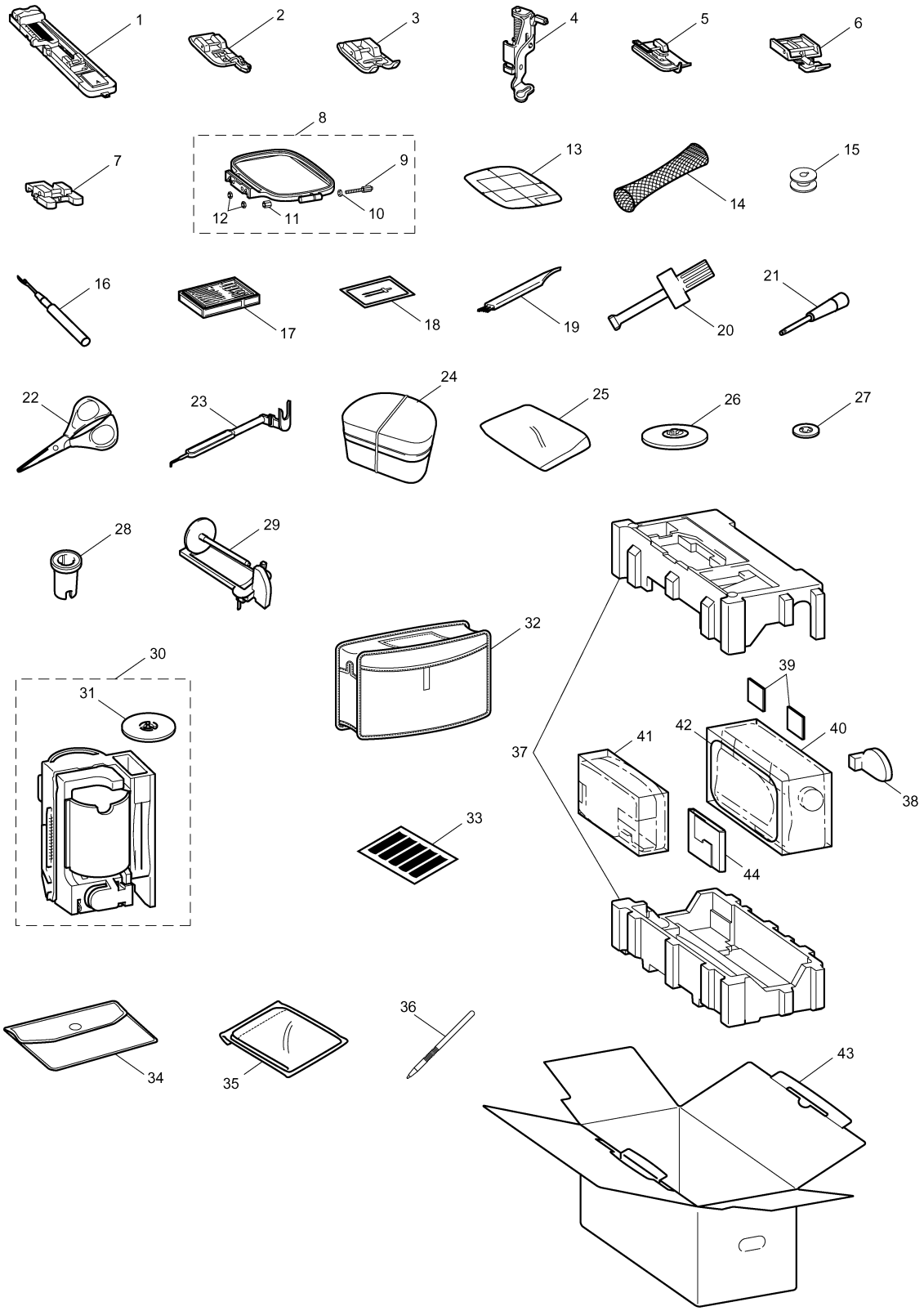
1
2
3
4
5
6
7
8
9
10
11
12
13
14
15
16
17
18
19
20
21
22
23
24
25
26
27
28
29
30
31
32
33
34
35
36
37
38
39
40
41
42
43
44

(9) ATTACHMENTS / PACKING MATERIALS / PRINTED MATTER

No.	CODE	NAME	REMARKS
	XC6382021	INSTRUCTION MANUAL ASSY	040147
	XC6369021	INSTRUCTION BOOK (English)	ADD
	XC6375021	QUICK REFERENCE GUIDE	ADD
	XC6376021	INSTRUCTION BOOK:DISNEY	ADD
	XC6475021	LANGUAGE SETTING SHEET	ADD
	130800021	BAG,220 × 310	ADD
	XC8439021	INSTRUCTION MANUAL ASSY	040147
	XC7800021	INSTRUCTION BOOK (Swedish)	ADD
	XC6375021	QUICK REFERENCE GUIDE	ADD
	XC6376021	INSTRUCTION BOOK:DISNEY	ADD
	XC6475021	LANGUAGE SETTING SHEET	ADD
	130800021	BAG,220 × 310	ADD
	XC8333021	INSTRUCTION MANUAL ASSY	040147
	XC6370021	INSTRUCTION BOOK (Spanish)	ADD
	XC6375021	QUICK REFERENCE GUIDE	ADD
	XC6376021	INSTRUCTION BOOK:DISNEY	ADD
	XC6475021	LANGUAGE SETTING SHEET	ADD
	130800021	BAG,220 × 310	ADD
	XC7255021	INSTRUCTION MANUAL ASSY	040147
	XC6374021	INSTRUCTION BOOK (Italian)	ADD
	XC6375021	QUICK REFERENCE GUIDE	ADD
	XC6376021	INSTRUCTION BOOK:DISNEY	ADD
	XC6475021	LANGUAGE SETTING SHEET	ADD
	XA6351121	WARRANTY CARD (ITALY)	ADD
	130800021	BAG,220 × 310	ADD
	XC7211021	INSTRUCTION MANUAL ASSY	040147
	XC6371021	INSTRUCTION BOOK (French)	ADD
	XC6372021	INSTRUCTION BOOK (German)	ADD
	XC6374021	INSTRUCTION BOOK (Italian)	ADD
	XC6375021	QUICK REFERENCE GUIDE	ADD
	XC6376021	INSTRUCTION BOOK:DISNEY	ADD
	XC6475021	LANGUAGE SETTING SHEET	ADD
	130800021	BAG,220 × 310	ADD
	XC8438021	INSTRUCTION MANUAL ASSY	040147
	XC8429021	INSTRUCTION BOOK (Danish)	ADD
	XC6375021	QUICK REFERENCE GUIDE	ADD
	XC6376021	INSTRUCTION BOOK:DISNEY	ADD
	XC6475021	LANGUAGE SETTING SHEET	ADD
	130800021	BAG,220 × 310	ADD
	XC8384021	INSTRUCTION MANUAL ASSY	040147
	XC6369021	INSTRUCTION BOOK (English)	
	XC6375021	QUICK REFERENCE GUIDE	
	XC6376021	INSTRUCTION BOOK:DISNEY	
	XC6475021	LANGUAGE SETTING SHEET	

No.	CODE	NAME	REMARKS
	130800021	BAG,220 × 310	
		SE270D	
	XC8545021	INSTRUCTION BOOK (English)	ADD
	XC8547021	INSTRUCTION BOOK (Spanish)	ADD
	XC8556021	QUICK REFERENCE GUIDE	ADD
	XC8546021	INSTRUCTION BOOK:DISNEY	ADD
	XC8614021	LANGUAGE SETTING SHEET	ADD
	XC0380021	WARRANTY CARD	ADD
	130800021	BAG,220 × 310	ADD
	XD0293021	INSTRUCTION CD	050029
	XC5256021	QUICK REFERENCE CHART	CHG
	UH3851001	WARRANTY CARD EUR	ADD
	160670021	BAG, 150 × 350 (FOOT CONTROLLER)	CHG
	264030021	BAG, 165 × 250 (FOOT CONTROLLER)	CHG
	XC9167021	THREAD CASSETTE INSERTION	040156

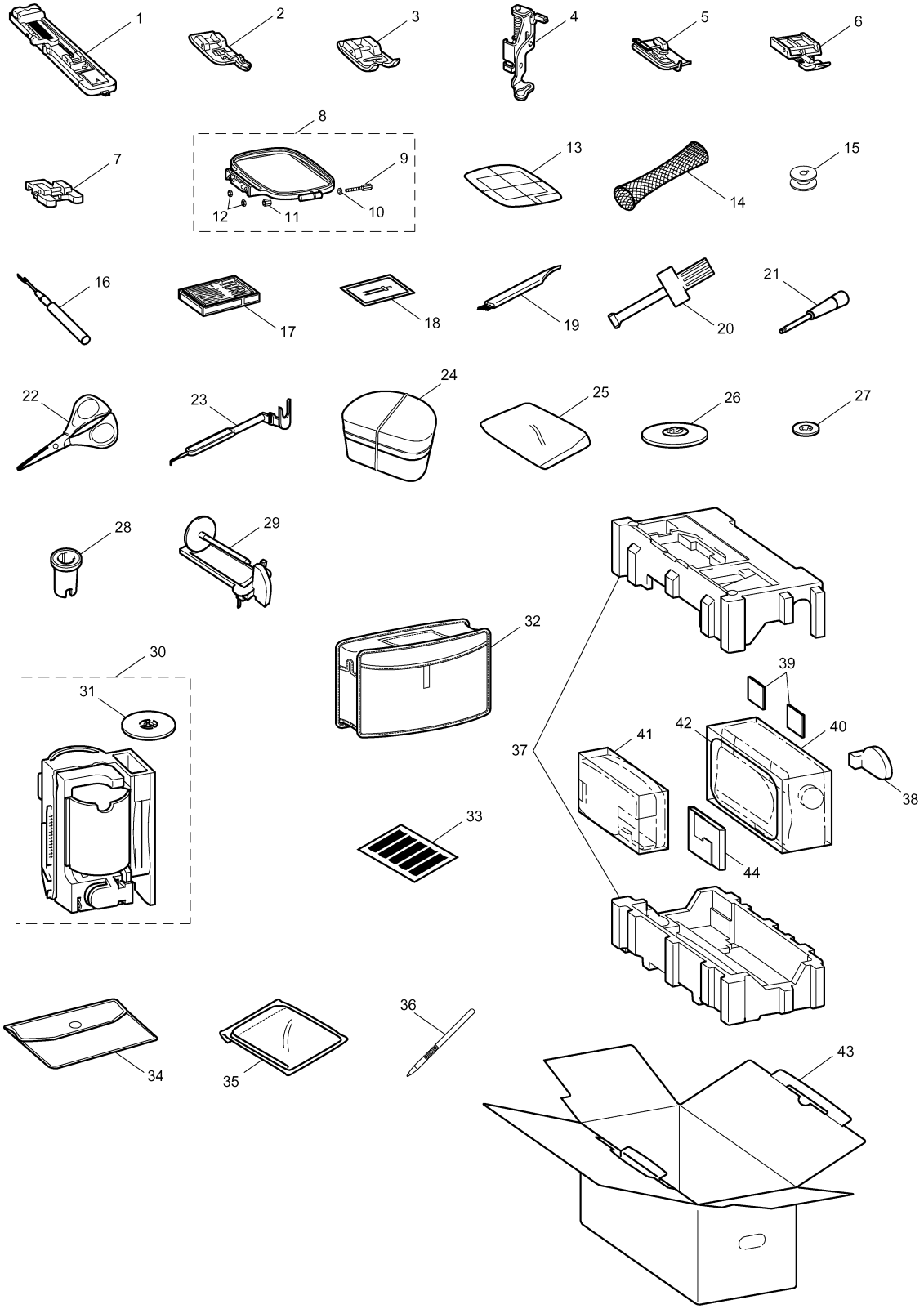
1
2
3
4
5
6
7
8
9
10
11
12
13
14
15
16
17
18
19
20
21
22
23
24
25
26
27
28
29
30
31
32
33
34
35
36
37
38
39
40
41
42
43
44

NEEDLE-PRESSER MODULE

No.	CODE	NAME	REMARKS
1	XC2394221	UPPER UNIT HOLDER	040137
2	XC2395121	SHAFT BUSHING ASSEMBLY	CHG
3	0A5401405	SCREW, PAN (S/P WASHE) M4 × 14	
4	XC2398020	SHAFT BUSHING A	
5	XC2399021	PRESSER BAR BUSHING	
6	085310815	TAPTITE, BIND B M3 × 8	
7	XC5362020	PLATE SPRING	
8	XC2400021	THREAD TAKE-UP COUNTER WEIGHT	
9	012500532	SET SCREW, SOCKET (FT) M5 × 5	
10	XC2401021	UNIT SHAFT	
11	132434020	WASHER	CHG
12	048060346	RETAINING RING, E6	
13	XC3545021	NEEDLE BAR SUPPORTER ASSY	
14	XC2419021	SHAFT	
15	XC2420020	SHAFT	
16	XC2421121	PLATE	
17	060300516	SCREW, BIND M3 × 5	
18	XC2423021	NEEDLE BAR	
19	XC3553021	NEEDLE BAR THREAD GUIDE	
20	X53053052	SCREW SM2.38	
21	XC2426020	NEEDLE THREAD PLATE	
22	XC3554051	NEEDLE BLOCK	
23	XC4162021	NEEDLE BLOCK SUPPORTER	
24	XC4266021	NEEDLE CLAMP SCREW	
25	014401232	SET SCREW, SOCKET (FT) M4 × 12	
26	X56851021	LOCK NUT	
27	XC2429021	SPRING	
28	XZ0152021	NEEDLE BAR CRANK ROD ASSY	CHG
29	132051022	SCREW, FLAT SM3.57-40 × 7 L	CHG
30	012500532	SET SCREW, SOCKET (FT) M5 × 5	
31	012400432	SET SCREW, SOCKET (FT) M4 × 4	
32	XC2434021	NEEDLE THREAD BLOCK	
33	XC2435020	ZIGZAG ADJUSTING NUT	
34	018301032	BOLT, SOCKET M3 × 10	
35	XC4301021	SPRING-Z	
36	XC2436021	NEEDLE HOLDER BROCK	
37	XC2437021	SHAFT ASSY	
38	XC3037021	SCREW3 × 10	
39	XC2440021	SHAFT	
40	XC2441021	SPRING	
41	048040346	RETAINING RING, E4	
42	XC3833121	THREAD TAKE-UP LEVER ASSY	CHG
43	XC2443020	THREAD TAKE-UP LEVER LINK	
44	XC2444021	PRESSER BAR	

No.	CODE	NAME	REMARKS
45	XC2445021	PRESSER BAR CLAMP ASSY	
46	014501032	SET SCREW, SOCKET (CP) M5 × 10	
47	XC2448021	SPRING	
48	XC2449021	PRESSER SPRING SUPPORTER	
49	XC3015051	PRESSER FEED HOLDER ASSY	
50	XA4813051	SCREW	
51	XC3021051	Z FOOT	
52	XC2451021	PRESSER FOOT LIFTER	
53	XC2452021	PRESSER LIFT SHAFT	
54	XA1860120	WASHER	
55	XC2453021	LEVER GUIDE SHAFT	
56	XC3555021	LEVER AB ASSY	
57	048020346	RETAINING RING, E2	
58	XC2461021	SPRING	
59	XC3561121	LEVER SUPPORTER PLATE	
60	085310615	TAPTITE, BIND B M3 × 6	
61	XC7215021	BH SWITCH ASSY	CHG
62	085411015	TAPTITE, BIND B M4 × 10	
63	XC2474020	Z ZIGZAG CAM	
64	XC2475021	SHAFT	
65	XC2476021	Z ZIGZAG LEVER ASSY	
66	XC2480020	Z LEVER CUP	
67	048030346	RETAINING RING, E3	
68	XC2481021	MOTOR,PULSE:Z SMJ35-4840-A	
69	085310815	TAPTITE, BIND B M3 × 8	
70	XC2483020	T CAM	
71	XC2491021	THREAD RELEASER ASSY	
72	XC2494021	THREAD RELEASE LEVER ASSY	
73	XC2499021	ADJUSTING PLATE	
74	XC5348021	GROUND SPRING	
75	XC3034020	THREAD GUIDE PLATE	
76	XC3563021	LEVER RELEASE PLATE ASSY	
77	XZ0149021	TAPTITE,PAN B 4 × 12	CHG
78	XZ0155021	POLYESTER SLIDER	CHG
79	000020415	SCREW, BIND M2 × 4	
80	XC5215021	SUPPORT SPRING	
81	014300532	SET SCREW, SOCKET (CP) M3 × 5	
	XC5437121	NEEDLE-PRESSER SUPPLY MODULE (EUROPE)	050019
	XC5437122	NEEDLE-PRESSER SUPPLY MODULE (U.S.A. & CANADA)	050019

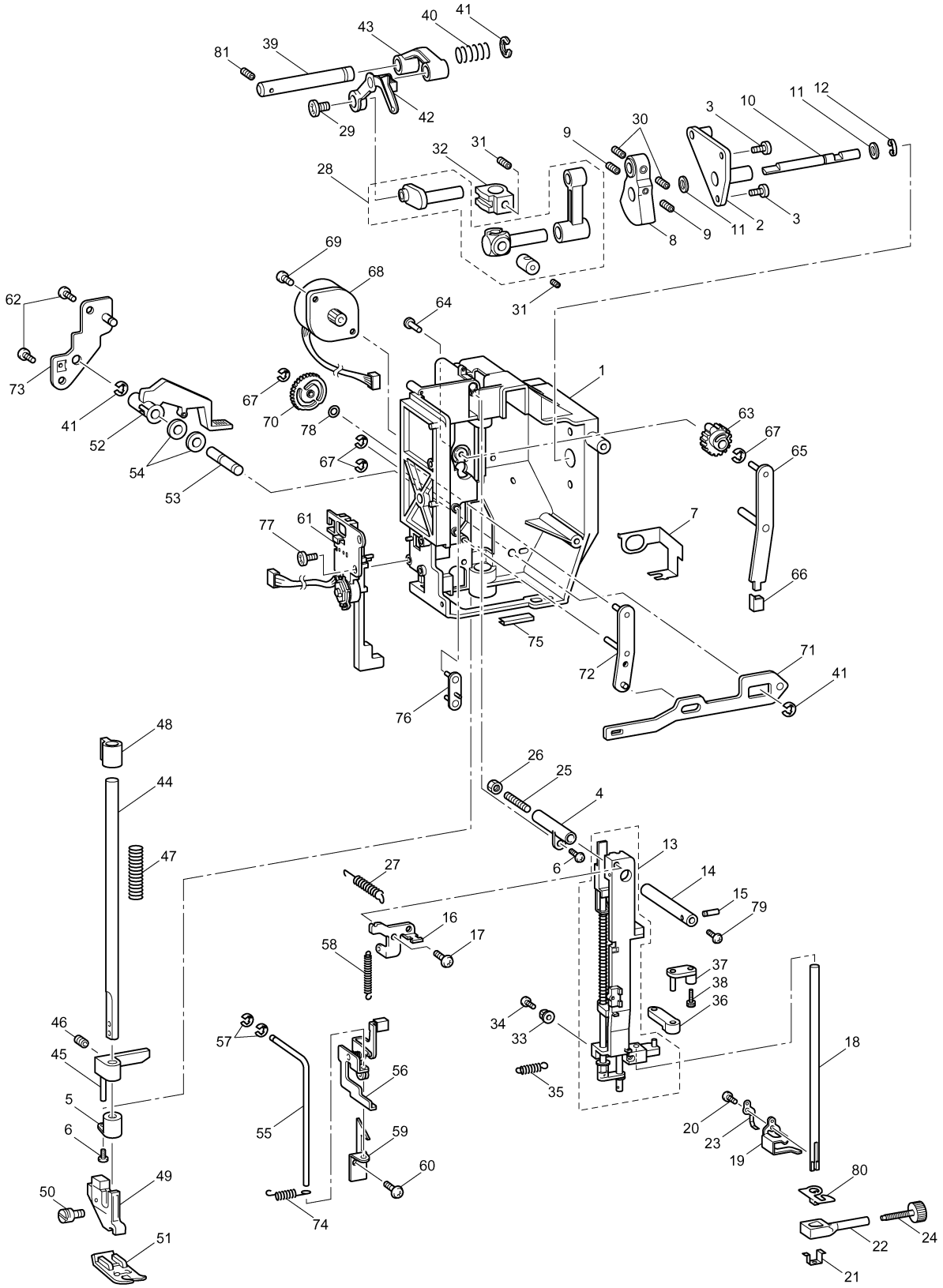

81
39
43
40
41
29
42
28
32
31
9
30
3
10
11
12
8
9
11
2
3
31
69
68
64
62
73
41
52
54
53
67
70
78
67
1
63
67
65
7
66
77
61
75
72
71
41
76
48
44
47
26
25
4
6
13
14
15
79
27
16
17
58
37
38
36
34
33
35
46
45
5
6
49
50
51
57
55
56
59
60
74
18
20
23
19
80
22
24
21

FEED MODULE

No.	CODE	NAME	REMARKS
1	XC3356221	FEED BASE	040085
2	XC2510021	FEED BAR	
3	XC5467021	FEED DOG	
4	XC2512021	FEED BAR SHAFT A	
5	XC2513021	FEED BAR SHAFT B	
6	XC2514021	FEED BAR SPACER	
7	048020346	RETAINING RING, E2	
8	XC2516021	FEED ARM A	
9	XC2517021	FEED ARM B ASSY	
10	XC2521021	FEED SUPPORTING PLATE ASSY	
11	048020346	RETAINING RING, E2	
12	048030346	RETAINING RING, E3	
13	137999020	POLYESTER SLIDER	
14	XZ0174021	SPRING	
15	XC2525021	HORIZONTAL FEED SHAFT	
16	048050346	RETAINING RING, E5	
17	X50546020	WASHER,THRUST	CHG
18	XC2527021	FEED ADJUSTER	
19	XC2529020	F GEAR	
20	XC2530021	SPRING	
21	137713020	POLYESTER SLIDER	
22	XC2531021	SPRING	
23	XC2532021	FPM HOLDER ASSY	
24	XC2534021	MOTOR,PULSE:F SMJ35-4840-C	
25	XC2587020	RUBBER	040131
26	060300516	SCREW, BIND M3 × 5	
27	XC3338021	SCREW3 × 8	
28	018402532	BOLT, SOCKET M4 × 25	
29	XC2537021	SPRING	
30	XC2538021	SPRING	
31	XC2539021	BUSHING SUPPORTER ASSY	
32	060400616	SCREW, BIND M4 × 6	
33	XC2542021	BUSHING PRESSER B	
34	060300516	SCREW, BIND M3 × 5	
35	XC3941051	VERTICAL ADJUSTER SCREW ASSY	
36	XC2546021	M5 NUT	
37	XC2210021	OUTER ROTALY HOOK ASSY	CHG
38	XC2547021	SPRING	
39	XC8361021	VERTICAL FEED SHAFT	040085
40	XC2550021	SPRING	
41	XC2551020	VERTICAL LEVER	
42	XC2552021	SET SCREW COLLAR	
43	014400432	SET SCREW, SOCKET (CP) M4 × 4	
44	048030346	RETAINING RING, E3	

No.	CODE	NAME	REMARKS
45	XC7801021	VERTICAL SUPPORTING PLATE	040085
46	137713020	POLYESTER SLIDER	
47	XC2230021	OUTER ROTARY HOOK SHAFT	CHG
48	137805022	SPACER	CHG
49	137976021	WASHER 6	CHG
50	014400632	SET SCREW, SOCKET (CP) M4 × 6	
51	XC2555021	INNER ROTARY HOOK BRACKET ASSY	
52	XC3581021	PHOTO DIODE HOLDER	
53	XC3582121	ASSY:PHOTO DIODE	CHG
54	000020415	SCREW, BIND M2 × 4	
55	XC2559021	STOPPER PLATE BLOCK ASSY	
56	060400516	SCREW, BIND M4 × 5	
57	060300816	SCREW, BIND M3 × 8	
58	XC2562121	LOWER SHAFT B ASSY	
59	X52664020	LOWER SHAFT BUSHING	
60	X51383020	WASHER,THRUST	
61	048060346	RETAINING RING, E6	
62	137768121	SET SCREW COLLAR	
63	014400432	SET SCREW, SOCKET (CP) M4 × 4	
64	XC2566021	BUSHING SUPPORTER A	
65	XC2567021	BUSHING PRESSER A	
66	060401616	SCREW, BIND M4 × 16	
67	XC2569051	NEEDLE PLATE A	
68	XC2570021	STOPPER PLATE	
69	XC2571021	F GEAR STOPPER PLATE	
70	060260316	SCREW, BIND M2.6 × 3	
71	X50487051	SCREW M4	
72	XC3585021	DROP KNOB	
73	XC5322021	SLIDE SHAFT	
74	XC2574021	SPRING PLATE	
75	026030135	WASHER, PLAIN S 3	
	XC5438021	FEED MODULE SUPPLY ASSY (EUROPE)	CHG
	XC5438022	FEED MODULE SUPPLY ASSY (U.S.A. & CANADA)	ADD

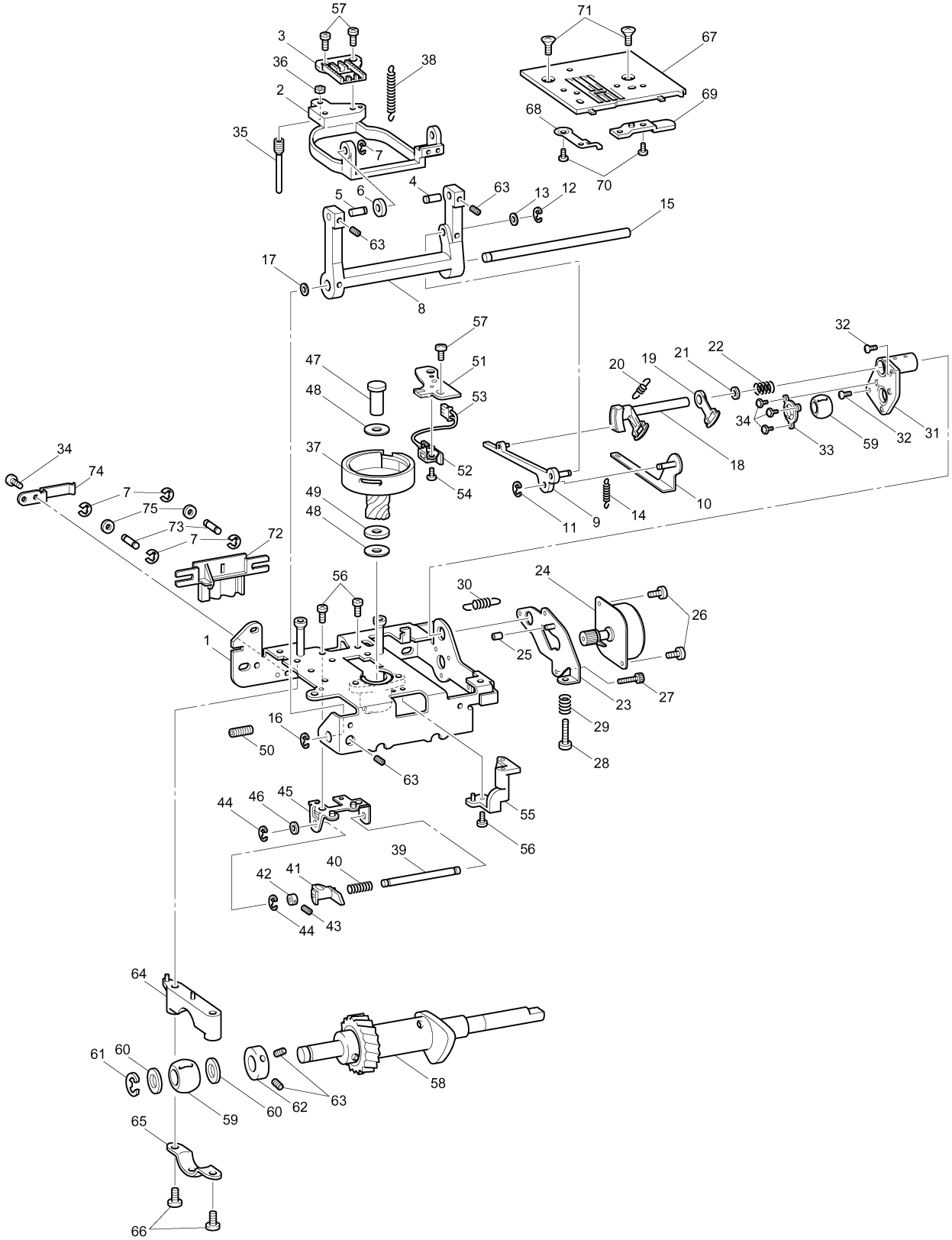
57
3
36
2
35
38
7
6
5
4
63
13
12
15
17
8
71
67
68
69
70
57
47
48
51
53
37
52
54
49
48
20
19
21
22
32
34
33
59
32
31
18
10
14
9
11
34
74
7
75
73
7
72
56
30
24
26
1
25
23
27
29
28
16
50
63
55
56
44
46
45
39
42
41
40
44
43
64
61
60
59
60
62
63
58
65
66

THREAD CUTTER MODULE

No.	CODE	NAME	REMARKS
1	XC2576021	THREAD CUTTER FRAME ASSY	
2	XC2579020	SPACER	
3	X80321021	NT LOWER THREAD CUTTER	040083
4	XC2596021	PRESSER PLATE	
5	XD0118001	PILE 4 × 4	040244
6	060300416	SCREW, BIND M3 × 4	
7	XC2598120	SPRING PLATE	040150
8	XC2587050	RUBBER	040131
9	048030346	RETAINING RING, E3	
10	XC2583121	THREAD HOOK ASSY	050013
11	137713020	POLYESTER SLIDER	
12	X56731020	WASHER	CHG
13	048040346	RETAINING RING, E4	
14	XC2581121	THREAD CUTTER LEVER	040085
15	XC2582020	THREAD CUTTER LEVER GEAR	
16	0A4300605	SCREW, PAN (S/P WASHER) M3 × 6	
17	XC2588021	MOTOR HOLDER ASSY	
18	XC2592020	IDLE GEAR A	
19	XC2593020	IDLE GEAR B	
20	X56323021	SPRING	
21	048020346	RETAINING RING, E2	
22	XC2331121	MOTOR PULSE:C SMJ35-4840-B	
23	060300416	SCREW, BIND M3 × 4	
24	XC2594021	COLLAR	
25	060402016	SCREW, BIND M4 × 20	
26	X53169020	BAND	CHG
27	137713020	POLYESTER SLIDER	
28	XZ0147020	DUST COVER	DEL 040151
29	XC8407020	WAVE-SHAPE SPRING WASHER	040085
	XC5439221	THREAD CUTTER SUPPLY ASSY (EUROPE)	050013
	XC5439222	THREAD CUTTER SUPPLY ASSY (U.S.A. & CANADA)	050013

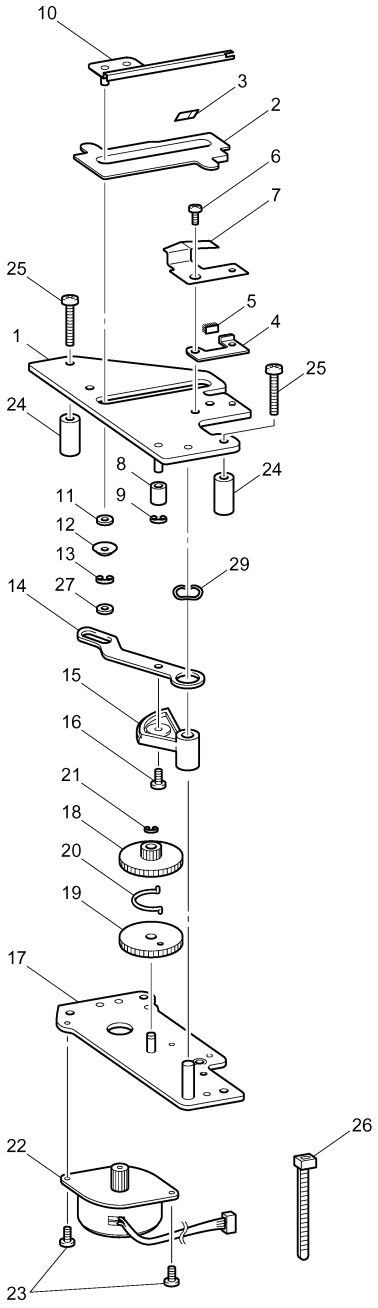
10
3
2
6
7
25
5
4
1
25
24
8
24
11
9
12
13
29
14
27
15
16
21
18
20
19
17
26
22
23

NC21-SE Model
NV500D, SE270D
32G03HF885S15