Husqvarna VIKING

SERVICE MANUAL

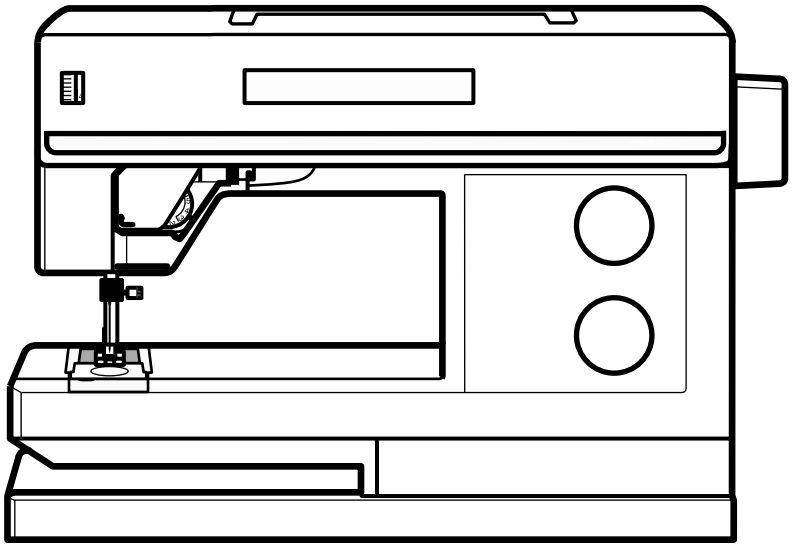

MECHANICAL MACHINE

© 2003 VSM Group AB - All Rights Reserved

Printed in Sweden
Made in Sweden
Jan - 2003

104 72 56-26
(Replaces 104 72 39-26)

Directions for use

These service instructions are intended to be used by service workshop personnel, or by salesmen who carry out servicing their own districts. They assume a thorough knowledge of the handling of precision appliances and accessibility to service tools.
The manual is divided into two sections and covers all service operations and checks which should be carried out when making a complete overhaul of a sewing machine.
The first section deals with the various settings which must be maintained to ensure that the machine functions satisfactorily.
The second section covers dismantling and mounting instructions.
The diagrams only give indication as to where the detail or mechanism is located in the machine. For more detailed infor-mation regarding the construction, etc., refer to the diagrams in the spare parts list.

Contents

Service tools 4
SETTING INSTRUCTIONS 5
1. The play of the hook gear 6
2. Setting the hook in relation to the feeding eccentric (after feeding). Version 1 - one pin 7
2. Setting the hook in relation to the feeding eccentric (after feeding). Version 2 - two pins 8
3. Belt tension, arm/lower shaft belt 9
4. Belt tension, motor belt 9
5. The turning movement of the needle in zig-zag 10
6. The play of the worm gear 11
7. Setting the feed dog in relation to the presser foot 12
8. The position of the zig-zag cam follower in relation to the cam set 13
9. The centre position of the needle in straight stitching 13
10. Stitch width limitation/lift height 14
11. The gap between the needle and the hook 15
12. The timing of the hook in relation to the needle 16
13. Needle height 17
14. Setting the stitch plate (the hook cover) in relation to the needle in the feeding direction. 18
15. The sideways setting of the stitch plate(the hook cover) in relation to the feed dog. 18
16. The height of the hook 19
17. The lifting height of the presser foot and its parallelity to the stitch plate 20
18. Feed dog height 21
Buttonhole setting, button type 1
19. The bar tack position of the buttonhole 22
20,21 Buttonhole balance, the colums 22
Buttonhole setting, button type 2
20. Course adjustment of the buttonhole 23
19. The bar tack position of the buttonhole 23
21. Fine adjustment of the buttonhole 23
Buttonhole setting, button type 3
20. Course adjustment of the buttonhole 24
19. The bar tack position of the buttonhole 24
21. Fine adjustment of the buttonhole 24
22. Stitch length balance - pattern stitches 25
23. Lower thread tension (thread tension of the bobbin basket) 26
24. Upper thread tension 27
25. Setting the thread take-up spring 28
26. Max. speed/smooth-running 29
27. Feed dog lowering 29

Rear cover 30
Upper rear cover - 300 series 31
Lower rear corner - 300 series 31
Front cover 32
Sewing head 33
Circuit board unit 34
Pattern mechanism 35
The parts of the pattern mechanism 36
Feeding unit 41
Bobbin device 42
Hook compl. 43

Service tools

A reasonable requirement in a domestic sewing machine is that it should able to sew all types of fabrics used in the home. The settings made when assembling and sewing-in the machines are those most suited to give the best results in the majority of fabrics and fabric combinations. In doing so, consideration has been given to the requirements of different markets. This does, however, mean that when sewing extreme fabrics, better results may be obtained in certain cases by altering the settings. It must be pointed out that these altered settings can cause poorer results on more normal fabrics. How the different standard ratings are set can be seen from the description under each setting instruction.
The following list of setting gauges and service tools is intended as an instruction about the special service tools needed to servicing this machine.

1. On several different occasions the needle is used as a setting gauge.
   The setting ratings are adapted to needle 90.
   Make sure to use an undamaged needle.

2. Gauge for setting the timing of the hook in relation to the needle .
   Ref. No 411 17 52-01

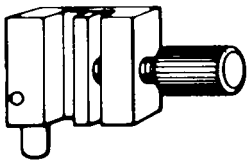

3. Gauge for the feed dog lift .
   Ref. No 411 49 93-01.

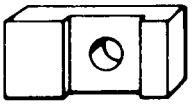

4. Gauge for the needle height .
   Ref. No 412 35 29-01.

5. Fixed spanner 11 mm
   Ref. No 412 39 30-01

6. Fixed spanner 8 mm
   Ref. No 412 35 30-01

7. Fixed spanner 7 mm
   Ref. No 412 22 35-01

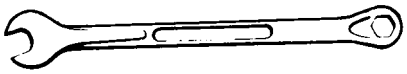

8. Fixed spanner 5.5 mm
   Ref. No 411 54 31-01

9. Allen key 2.5 mm
   Ref. No 411 86 01-01

10. Allen Key 2 mm
    Ref. No 411 86 00-01

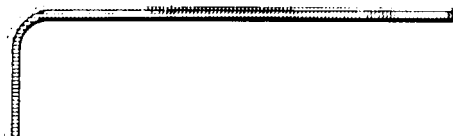

11. Distance guage 0.05-1.0 mm
    Ref.No 412 38 85-01

12. Screw driver.Torx 10
    Ref. No 412 36 48-01

13. Screwdriver Torx 20
    Ref. No 412 36 49-01.

14. ScrewdriverTorx 25
    Ref. No 412 36 50-01

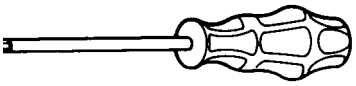

SETTING INSTRUCTIONS

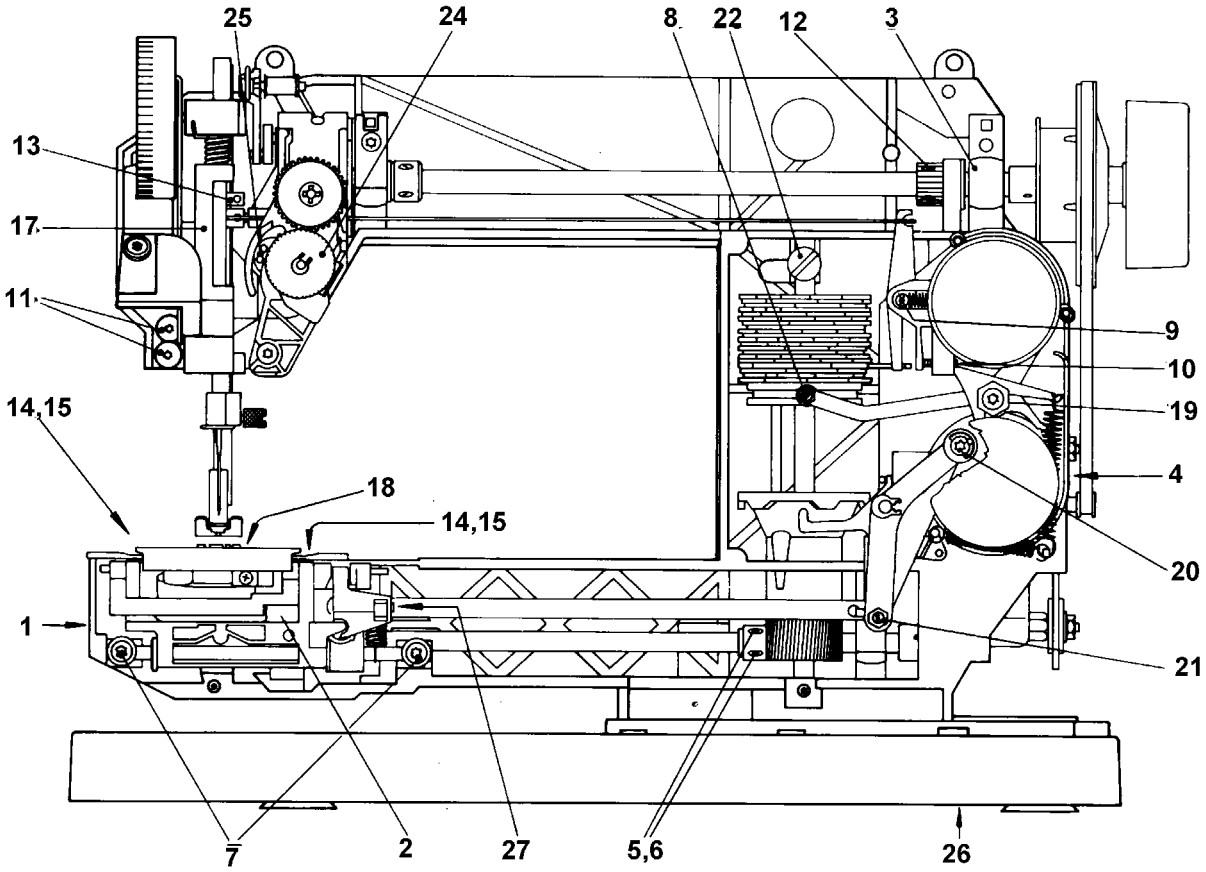

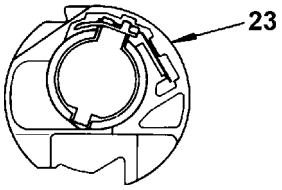

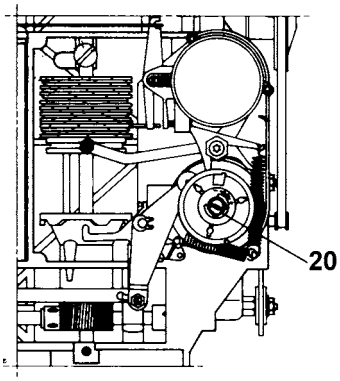

VERSION 2

1. The play of the hook gear

It is impossible to obtain an equally large play in one rotation of the cog wheel, but it should be as small as possible at the tightest spot during the revolution.

Check
1. Rotate the hook back and forth and check the play.
2. Do this check at at least 3 different spots during the revolution of the cog wheel. (Move the cog wheel with the hand wheel).

Adjustment
1. Loosen, screw (A) in the bearing clamp
2. The play can now be adjusted by turning the eccentric bearing (B).

NOTE! The hole (C) in the bearing shall always be on the lower half.

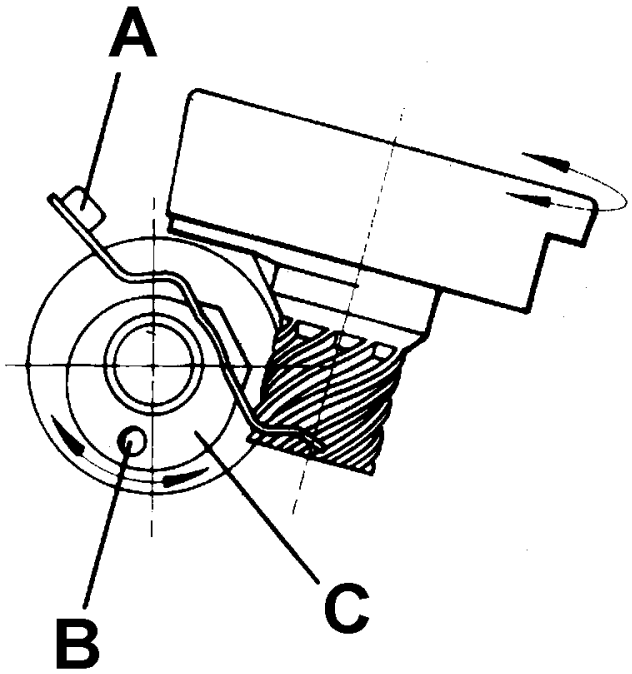

2. Setting the hook in relation to the feeding eccentric (after feeding). Version 1 - one pin

Check
1. The needle shall be in its centre position, straight stitching.
2. Set the tip of hook (A) so is centred behind the needle, the tap of the worm gear should now be positioned according to fig. 2

Alt. Check
1. When the two taps of the worm gear are positioned according to fig. 2 the tip (A) of the hook should point straight backwards.

Adjustment
1. Loosen screw (B). Remove the hook and set it into its correct position.

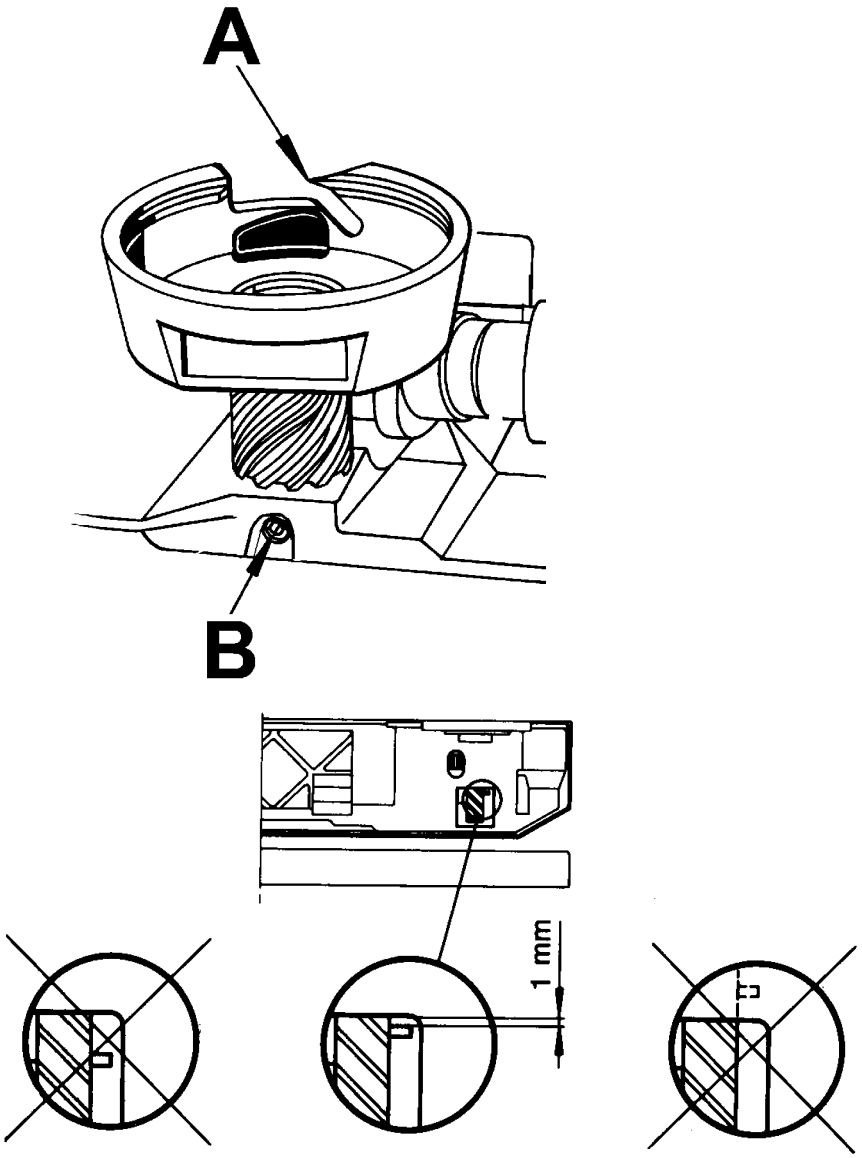

Fig 2

Note! If none or only one pin is found plaese clean the worm gaer and look for a breaking mark.

2. Setting the hook in relation to the feeding eccentric (after feeding). Version 2 - two pins

Check
1. The needle shall be in its centre position, straight stitching.
2. Set the tip of hook (A) so is centred behind the needle, the tap of the worm gear should now be positioned according to fig. 3

Alt. Check
1. When the two taps of the worm gear are positioned according to fig. 3 the tip (A) of the hook should point straight backwards.

Adjustment
1. Loosen screw (B). Remove the hook and set it into its correct position.

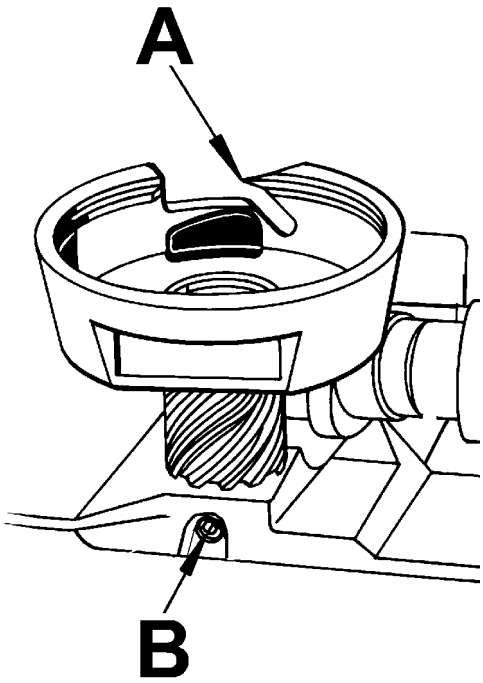

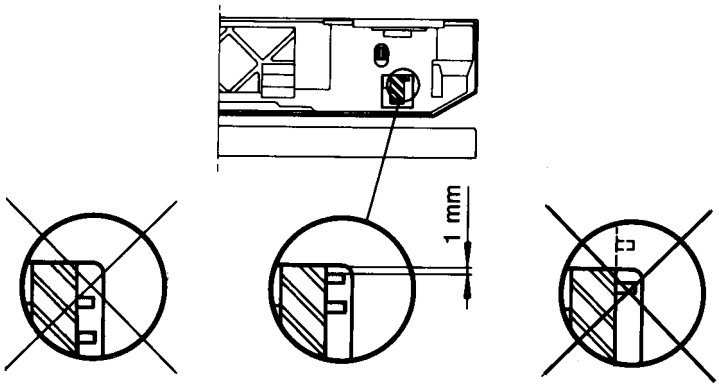

Fig 3

Note! If none or only one pin is found plaese clean the worm gaer and look for a breaking mark.

3. Belt tension, arm/lower shaft belt

1. Dismount rear cover and front cover .
2. Loosen the screw in the bobbin winding device and remove it.
3. Loosen the screws (A) of the bearing clamp.
4. The belt tension can now be adjusted by turning bearing (B) which is eccentric.

NOTE! The hole (C) should always be on the front half.

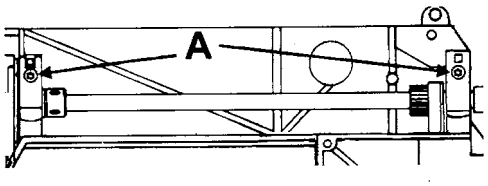

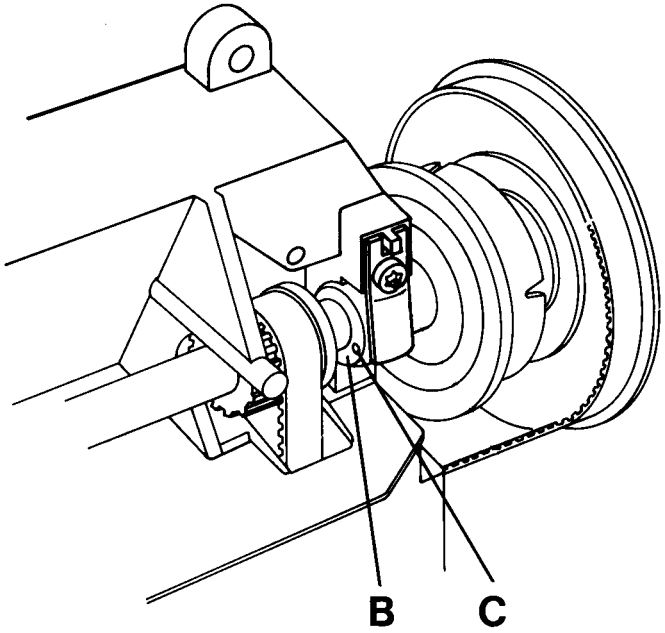

4. Belt tension, motor belt

1. Dismount rear cover.
2. Loosen the 2 nuts (A) and adjust the belt tension by turning support (B).

NOTE! Adjustment of the arm/lower shaft belt affects this adjustment.

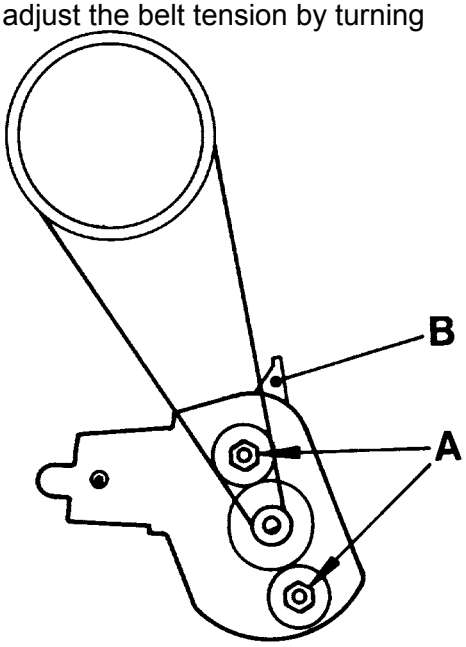

5. The turning movement of the needle in zig-zag

Check

1. Set machine for widest zig-zag.
2. The lateral movement of the needle should be completed when the tip of the needle is about 5 mm above the stitch plate.

Adjustment

1. Loosen 2 screws (A) on the worm wheel (B) of the lower shaft.
2. Block the worm wheel by means of the screw driver and rotate the handwheel.
3. Tighten a screw and check.
4. Is the setting correct, tighten the screws.

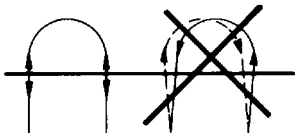

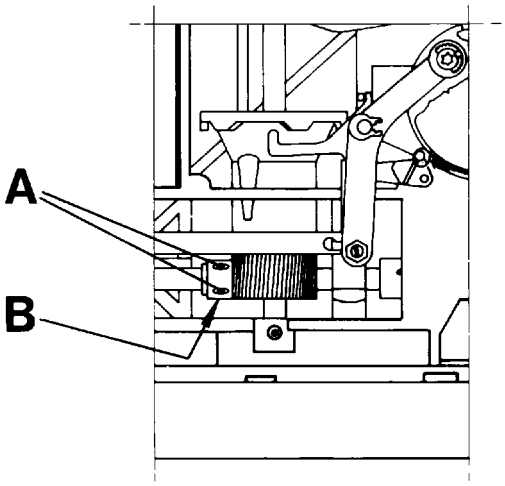

6. The play of the worm gear

It is impossible to obtain an equally large play in one rotation of the cog wheel, but it should be zero or as small as possible at the tightest spot during the revolution.

Check

1. Rotate the cog wheel (C) back and forth and check the play.
   It should be zero or as small as possible.
2. Make this check at at least 3 different spots during the revolution of the cog wheel.
   (Move the cog wheel with the hand wheel).

Adjustment

1. Loosen the 2 set screws (A) and push the worm wheel (B) to the left or to the right until the smallest possible play is obtained.
2. Tighten the 2 set screws and recheck.
3. Check that the turning movement of the needle in zig-zag does not change.

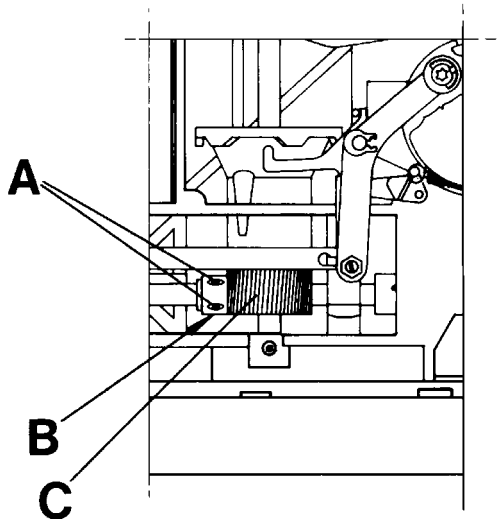

7. Setting the feed dog in relation to the presser foot

Check

1. Sideways the hook should be symmetrically set in relation to the presser foot.

Adjustment

1. Loosen the 2 screws (A) in the feeding device.
2. Move the feeding device sideways until the feed dog is right below the presser foot.
3. Tighten the screws.

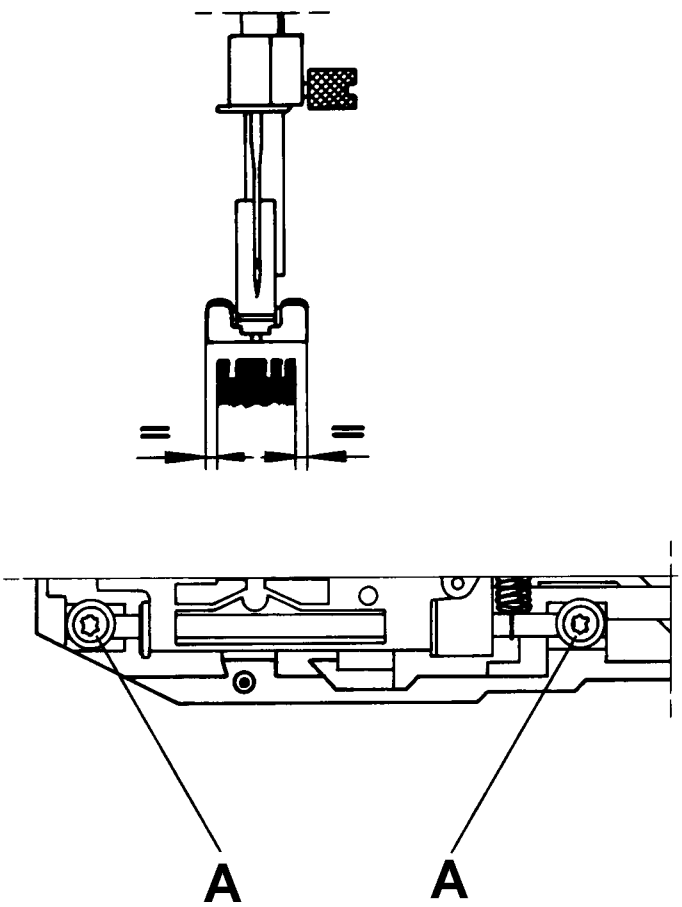

8. The position of the zig-zag cam follower in relation to the cam set

Check

Vertically the cam set should be thus set that the cam follower (A) is centred against a cam (B).

Adjustment

1. Loosen locking nut (C).
2. Turn screw (D) until the cam follower is centred against a cam.

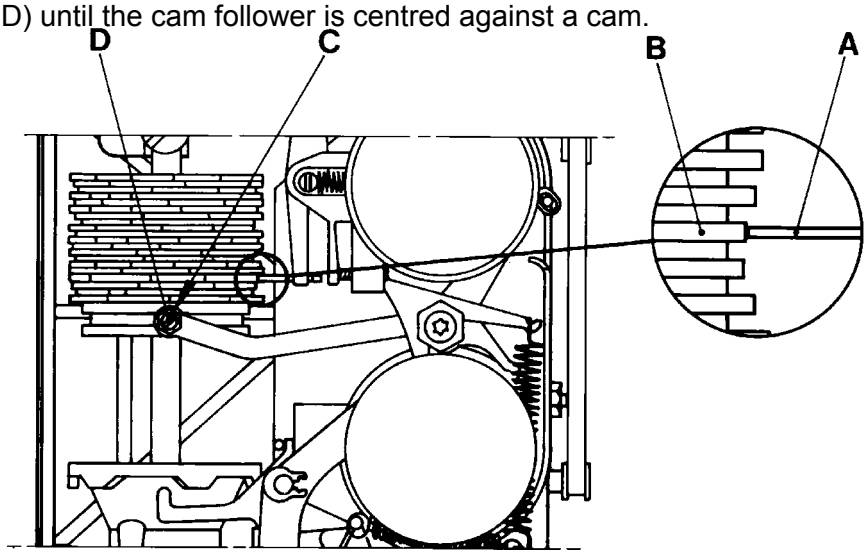

9. The centre position of the needle in straight stitching

Check

1. Set the machine on straight stitching, centre position.
2. Insert a new 90 needle
3. The needle has to descend sideways into the middle of the needle hole of the presser foot.
4. Use presser foot (A) when checking.

Adjustment

1. Turn screw (B) until the needle descends into the middle of the needle hole of the presser foot.

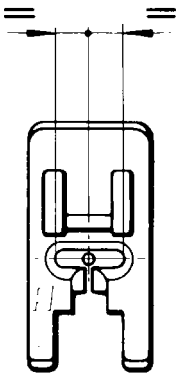

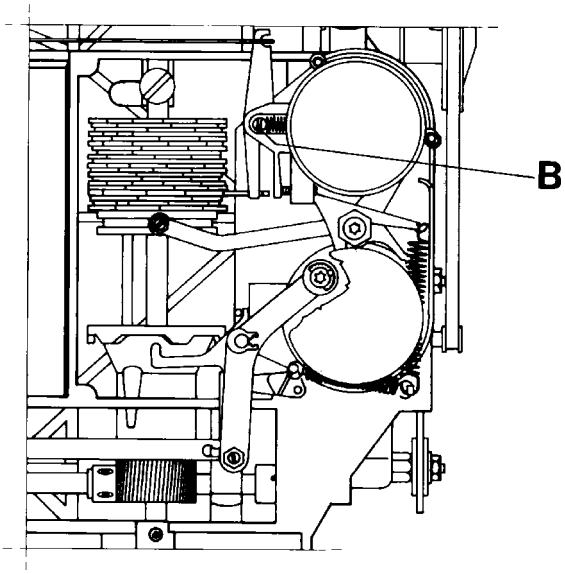

10. Stitch width limitation/lift height

Check
1. Set the machine on zig-zag.
2. Turn stitch width dial until 0.
3. The machine should now sew a straight stitch in right position and when changing stitches the cam follower (A) should lift min. 0.2 mm above the highest cam top.

Adjustment
1. Set the machine on zig-zag, stitch width 0.
2. Turn screw (B) until a narrow zig-zag is obtained.
3. Turn back the screw until a straight stitch is obtained.

NOTE! This setting affects the outer position of all stitches.

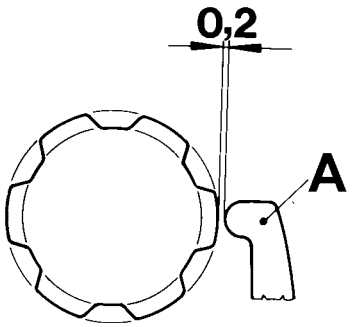

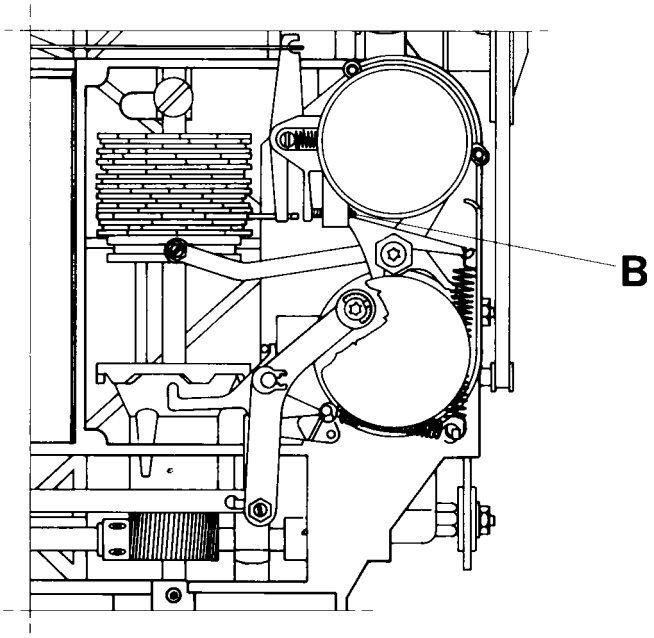

11. The gap between the needle and the hook

Check

1. Set stitch selector for straight stitching.
2. Insert a new needle 90 in the machine.
3. Rotate hand wheel until the point of the hook arrives behind the needle.
   Check the gap by pressing a small screw driver against the needle.
   The gap should be as small as possible, but max 0.15 mm.

Adjustment

1. Dismount the bulb.
2. If the gap is too large: Turn screw (A) clockwise and tighten screw (B).
3. If the gap is too small: Loosen the screw (B) and make the gap larger.

Turn screw (A) clockwise and tighten screw (B)
NOTE! Always tighten with screw (B).

Check!

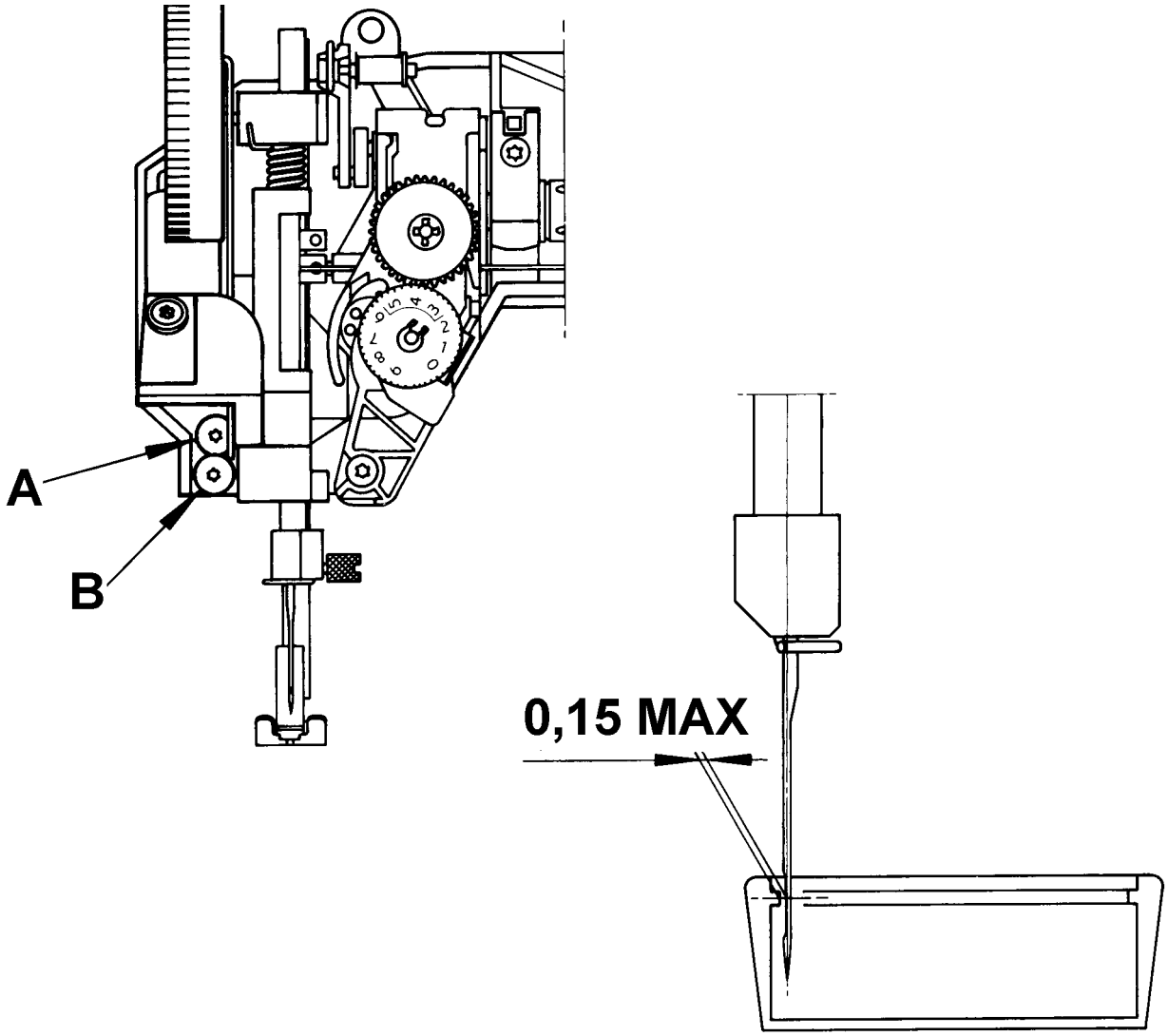

12. The timing of the hook in relation to the needle

Check

1. Set a new needle 90 into the machine
2. Dismount the stitch plate and the bobbin basket.
3. Set machine on straight stitching.
4. As the needle is moving upwards, the tip of the hook should pass behind the centre of the needle, when the needle is 2.5 mm above its lower turning position.

NOTE! The feeding eccentric should be straight backwards.

Check with setting gauge 411 17 52-01.

1. Turn the handwheel until the needle is at its lower turning position.
2. Place the setting gauge on the needle bar so that the spring-loaded stud (A) just touches the needle bar frame and tighten the screw.
3. Move the needle upwards with the handwheel until the spring-loaded stud (A) rests against its stop in the setting gauge.
4. The tip of the hook should now be behind the centre line of the needle.

Adjustment

1. Remove the blank pointed screw (B) and loosen the other 2 screws in the belt wheel of the arm shaft.
2. Repeat checking points 1, 2 and 3.
3. Hold the arm shaft and turn the hook until its tip arrives behind the centre line of the needle.
4. Tighten one of the black screws.
5. Make sure the screw descends into the groove of the shaft (see picture) so that the belt wheel is placed correctly sideways.
6. Check.
7. Tighten all the screws.

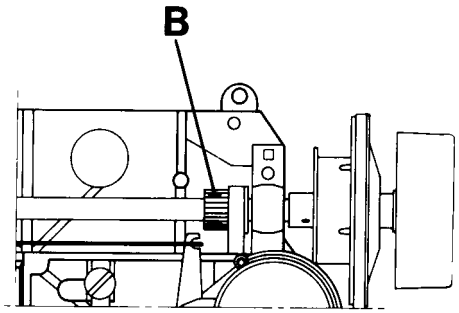

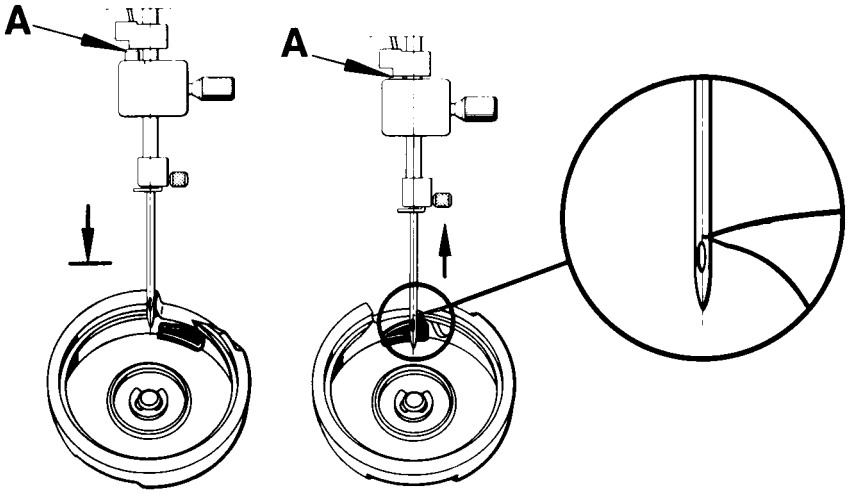

13. Needle height

Check
1. Bring needle into its lower turning position.
2. The gap between the upper end of the needle and the surface (B) of the hook ring should be 29.15 ± 0.2 mm.

The check is executed with a polished needle 90 which is 29.15 mm long.
Order nr. 412 35 29-01

Adjustment
1. Bring needle to its lower turning position.
2. Loosen screw (A) and move the needle bar until the correct measure is obtained.
3. Tighten the screw.

NOTE! Check by means of a twin needle that the needle bar is not twisted.
May cause jump stitches when sewing with a twin needle.

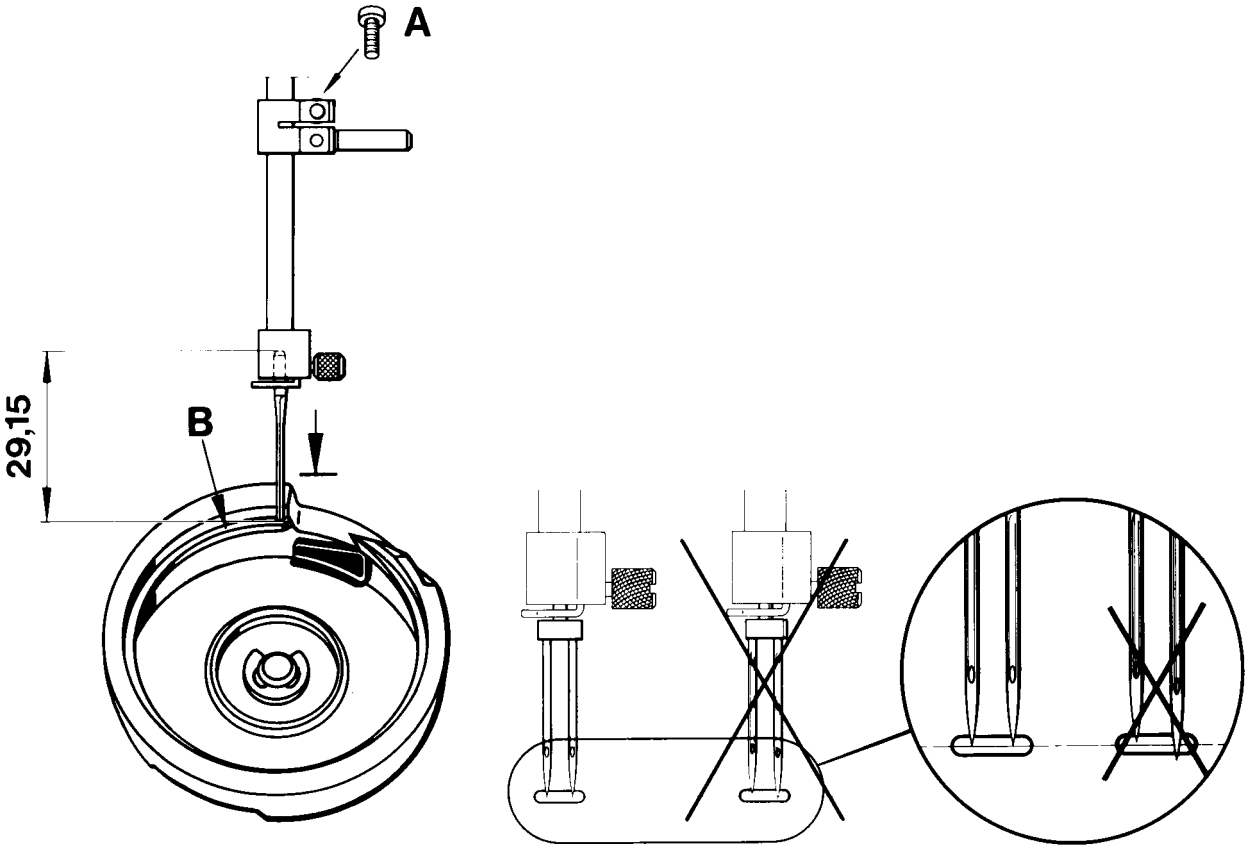

14. Setting the stitch plate (the hook cover) in relation to the needle in the feeding direction.

Check
In the feedin direction the needle should descend right into the middle of the needle hole of the stitch plate.

15. The sideways setting of the stitch plate (the hook cover) in relation to the feed dog.

Check
The feed dog must not touch the stitch plate at any point.

Adjustment
Loosen the 3 screws (A) of the hook cover and move it so that:
- the needle sideways descends in the middle of the stitch plate.
- the feed dog does not touch the stitch plate.

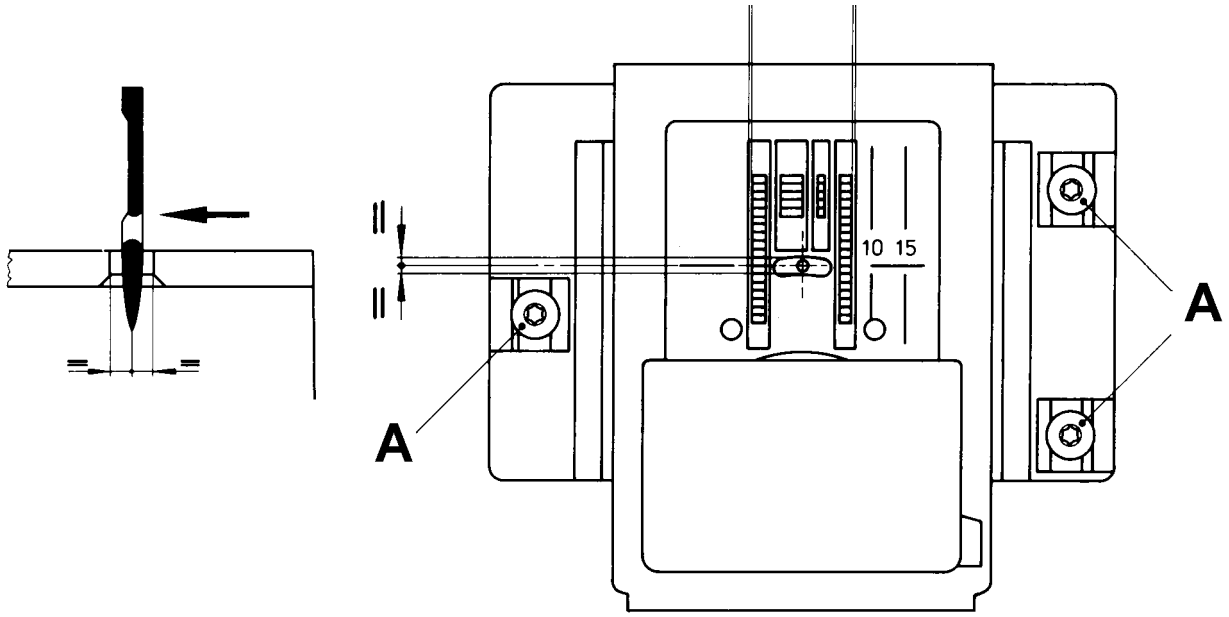

16. The height of the hook

Is checked between the bobbin case and the case holder

Check
The distance between the bobbin case and the case holder should be $0.5^{+0.1}_{-0,05}$ mm.
The check is carried out at the tightest spot between the bobbin case and the case holder. Check at the marked position according to fig. 1.

Adjustment
1.Loosen screw (A).
2.The gap between the hook and its cover can now be adjusted by turning the stud (C) right or left.
- To the right, the gap becomes larger.
- To the left, the gap becomes smaller.

3.Push down the hook shaft (B).
4. Tighten the screw (A).

N.B. The distance between bobbin case and case holder must also <u>always</u> be checked after the frontcover is mounted.

N.B.: This setting affects:
1. The play of the hook gear.
13. The timing of the hook and the needle
14. The needle height

Check with distance gauge 412 38 85-01.

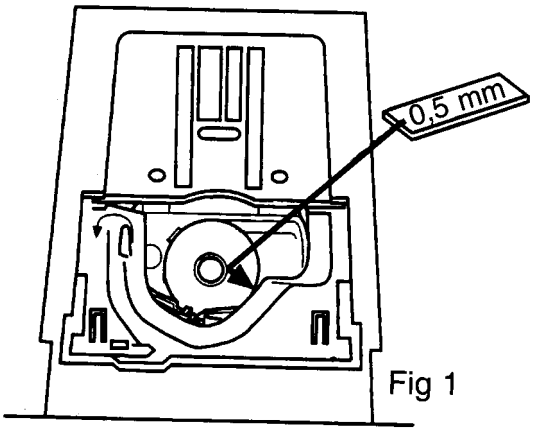

Fig 1

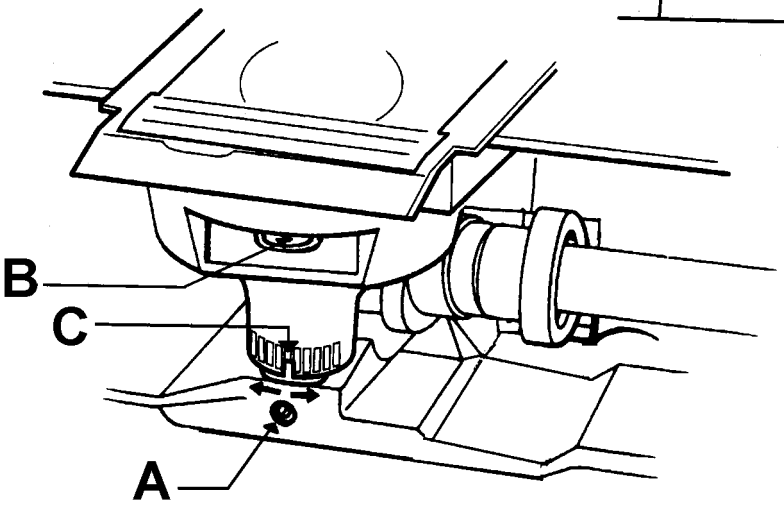

17. The lifting height of the presser foot and its parallelity to the stitch plate

Check
The presser foot (A) shall be parallel to the feed dog groove (B) and in its lifted position it shall be approx. 8 mm above the stitch plate.

Adjustment
1. Loosen screw (C) and turn the presser foot until it is parallel to the feed dog groove of the stitch plate and move it until its lifting height is approx. 8 mm.
2. Tighten the screw.

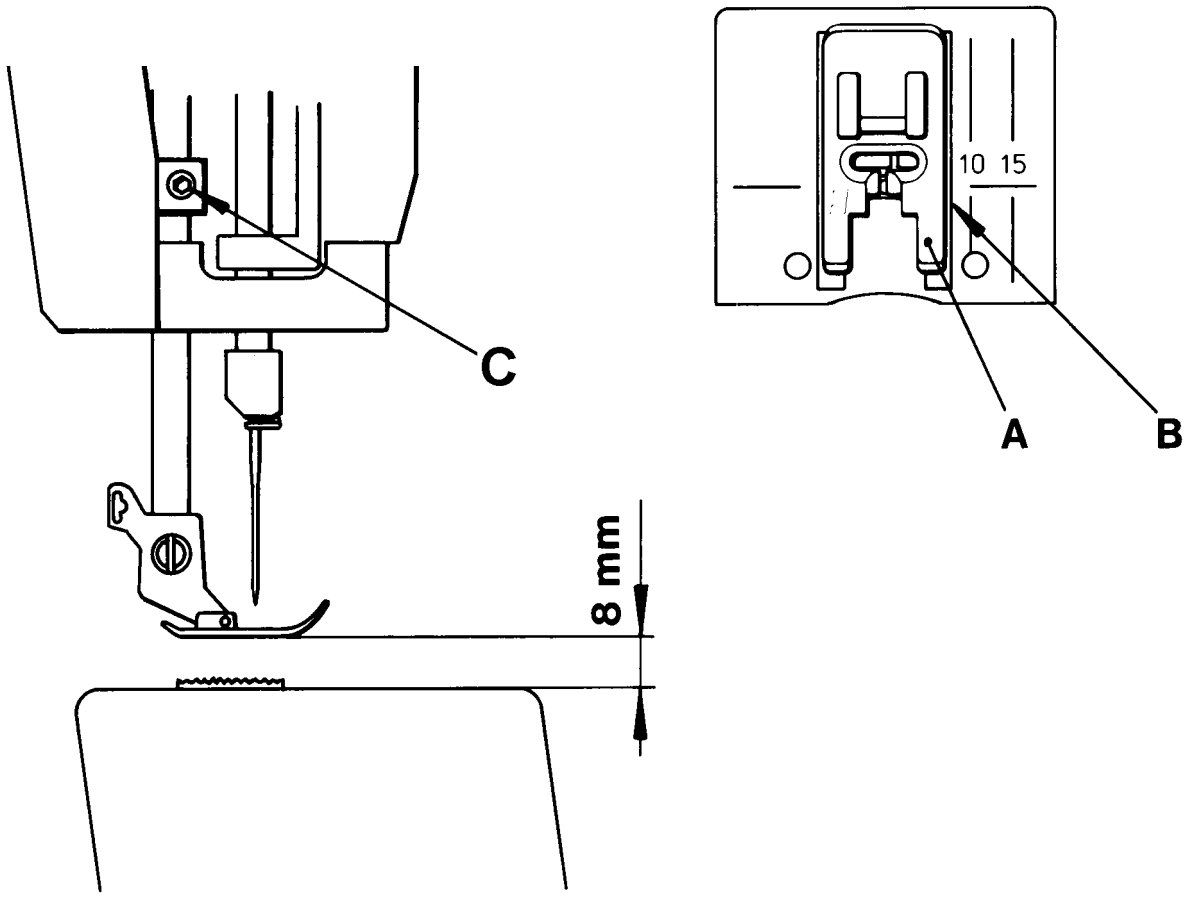

18. Feed dog height

Check
1. Bring feed dog to its highest position.
2. The top of the feed dog should be 0.9-1.1 mm above the stitch plate.

Check with setting gauge 411 49 93-01

Adjustment
1. Bring feed dog to its highest position.
2. Adjust with a screw driver the adjustment nut (A) until a correct feed dog height (0.9-1.1 mm) is obtained.

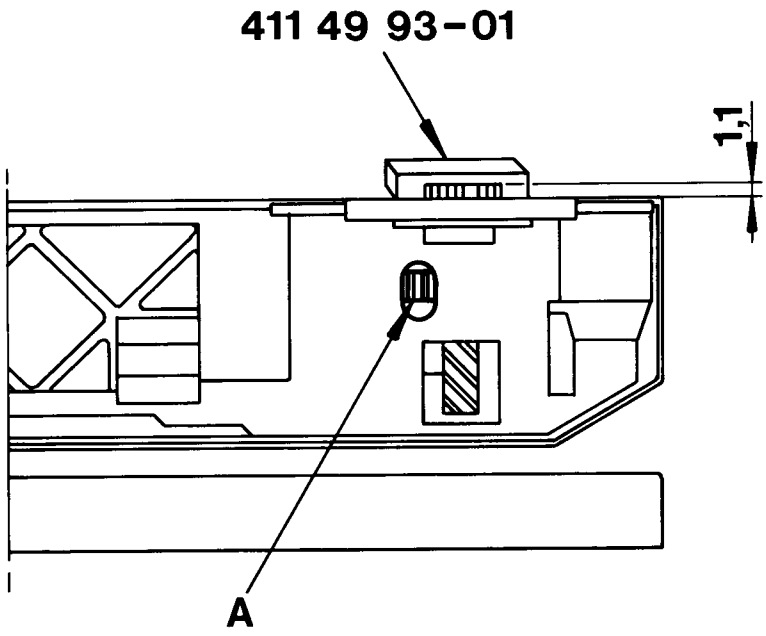

Buttonhole setting, button type 1

The Buttonholes type 1: Columns is sewed in different direction

19. The bar tack position of the buttonhole

Check
When the stitch selector is set in bar tack position there should not be any feeding.

Adjustment

1. Set stitch selector in bar tack position and let the machine go without thread , but with a piece of cloth under the presser foot.
2. Loosen the screw (A) and turn the eccentric nut untill the feeding stops.

NOTE! The eccentricity of the nut should be upwards.

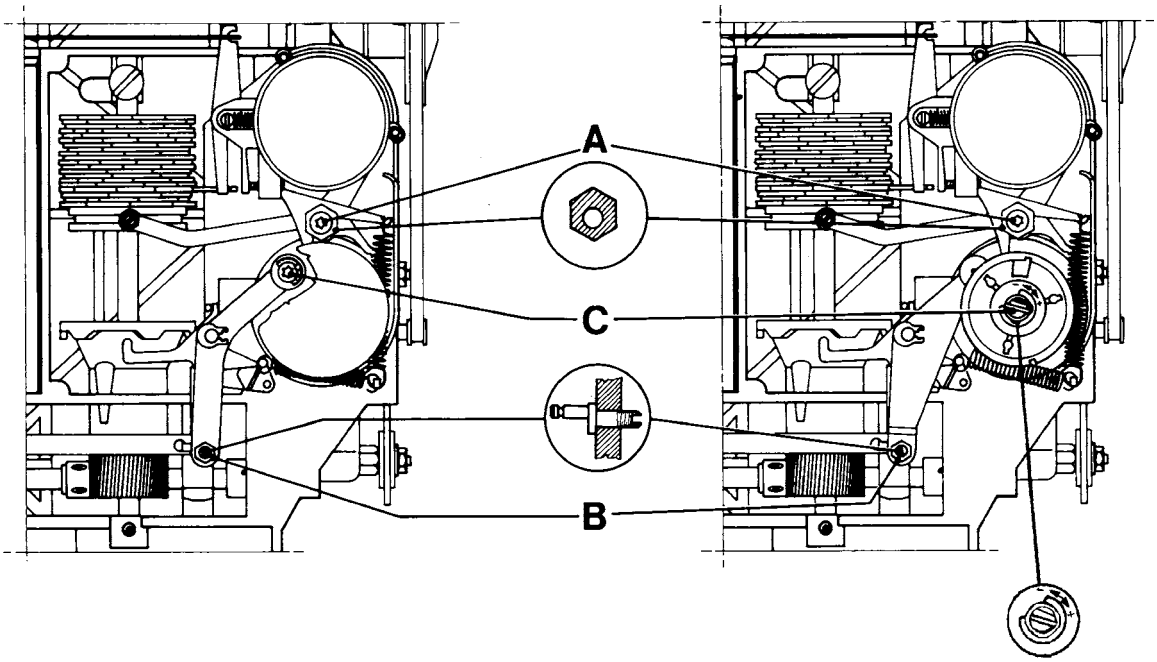

20,21 Buttonhole balance, the colums

Check

Both columns of the buttonhole should have equal density.

Course adjustment

1.Is executed by loosing the locking nut (B) and turning the screw in its centre.
2.If right column is too dense, turn the screw anti clockwise.
3.To make right column denser,turn the screw clockwise.

Note ! The eccentricity of the screw should point upwards.

Fine adjustment

1. Is executed by turning screw (C).
2. If right column is too dense, turn the right screw counter clockwise.
3. Turn the screw clockwise to make right column denser.

Note ! This adjustment can be executed without dismounting the cover.
Dismount only the stitch length dial by pulling it straight out.

Buttonhole setting, button type 2

Buttonholes type 2: Columns is sewed in the same direction

Check

When the stitch selector is set at bar tack position there should not be any feeding.

20. Course adjustment of the buttonhole

1. Set stitch selector at buttonhole column and stitch lenght 0 (zero).
2. Let the machine go without thread , but with a piece of cloth under the presser foot.
2. Loosen the locking nut (B) and turn the screw its centre untill the feeding stops.

19. The bar tack position of the buttonhole

1. Set stitch selector in bar tack position and stitch lenght on buttonhole.
2. Loosen the screw (A) and turn the eccentric nut untill the feeding stops.

NOTE! The eccentricity of the nut should be upwards.

21. Fine adjustment of the buttonhole

Note ! On version 2 the mark of screw (C) should be positioned obliquely upwards to the right

1. Is done by turning screw (C).
2. If column are too dense, turn the screw clockwise.
3. If the column are not dense enough , turn the screw anti clockwise.
4. Check that the button hole straight stitch feeds - If not turn the screw (C) anti clockwise.

Note ! This adjustment can be executed without dismounting the cover.
Dismount only the stitch length dial by pulling it straight out.

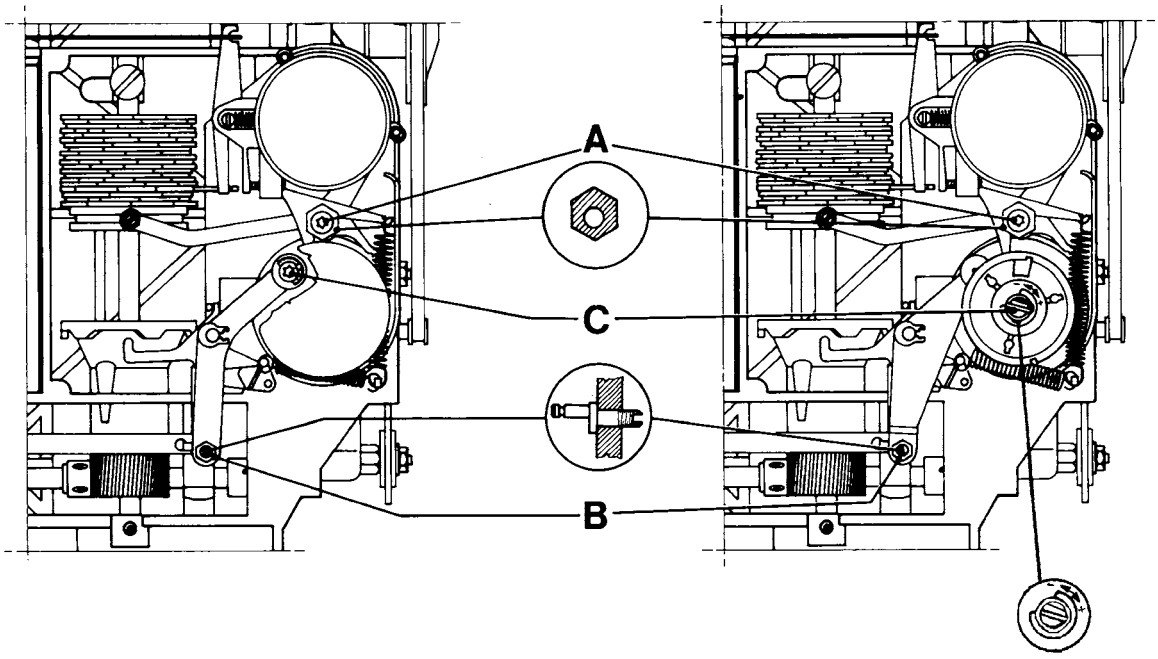

Buttonhole setting, button type 3

Buttonholes type 3: Columns is sewed in the same direction

Check

When the stitch selector is set at bar tack position there should not be any feeding.

20. Course adjustment of the buttonhole

1. Set stitch selector at buttonhole column and stitch lenght 0 (zero).
2. Let the machine go without thread , but with a piece of cloth under the presser foot.
2. Loosen the locking nut (B) and turn the screw its centre untill the feeding stops.

19. The bar tack position of the buttonhole

1. Set stitch selector in bar tack position and stitch lenght on buttonhole.
2. Loosen the screw (A) and turn the eccentric nut untill the feeding stops.

NOTE! The eccentricity of the nut should be upwards.

21. Fine adjustment of the buttonhole

Note ! On version 3 the mark of screw (C) should be positioned obliquely upwards to the right.

1. Is done by turning screw (C).
2. If column are too dense, turn the screw clockwise.
3. If the column are not dense enough , turn the screw anti clockwise.
4. Check that the button hole straight stitch feeds - If not turn the screw (C) anti clockwise.

Note ! This adjustment can be executed without dismounting the cover.
Dismount only the stitch length dial by pulling it straight out.

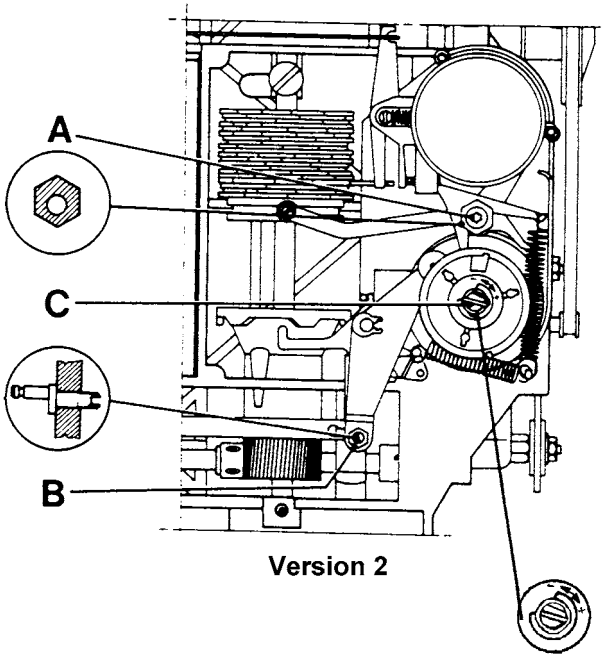

Version 2

22. Stitch length balance - pattern stitches

Check

1. The balance between between forward and reverse feeding shall be such that the needle in the reverse feeding stitch goes down into the hole of the former stitch (D).

Adjustment

1. Loosen locking screw (A).
2. If the stitch is not dense enough (D): turn screw (B) clockwise.
   If the stitch is too dense (E): turn screw (B) half a turn counter clockwise and push shaft (C) upwards.
4. Turn screw (B) clockwise until obtaining the correct setting.
5. Tighten screw (A).
6. Check.

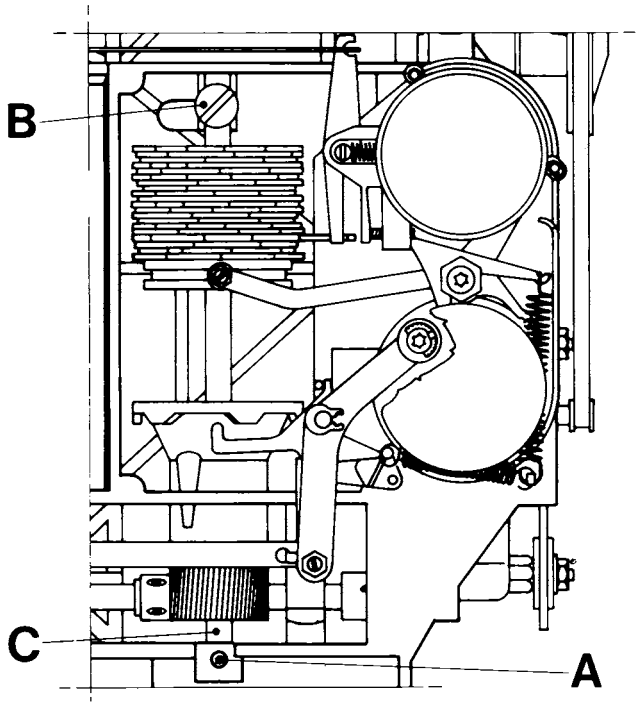

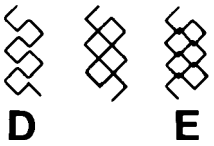

23. Lower thread tension (thread tension of the bobbin basket)

Check

1. Insert a full bobbin into the bobbin basket.
2. The thread tension spring of the bobbin basket shall give a resistance of 12 - 20 g when pulling the thread slowly.

Adjustment

1. Turn screw (A) until the correct thread tension is obtained.

NOTE! Remove any loose pieces of thread or fluff from under the spring.

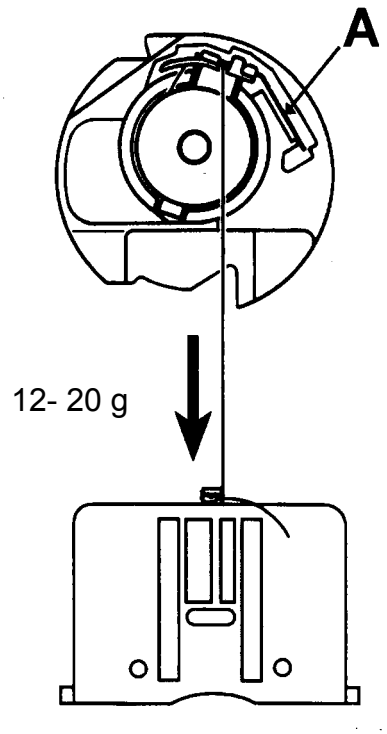

24. Upper thread tension

Check
A correct take-up should be obtained at straight stitching and zig-zag in cotton, when the thread tension dial is set on the white field.

Adjustment
1. Run the machine and turn the thread tension dial (A) until a correct take-up is obtained.
2. Loosen locking washer (B).
3. Remove the thread tension dial (A) and put it back on the shaft with its white field right in front of the index.

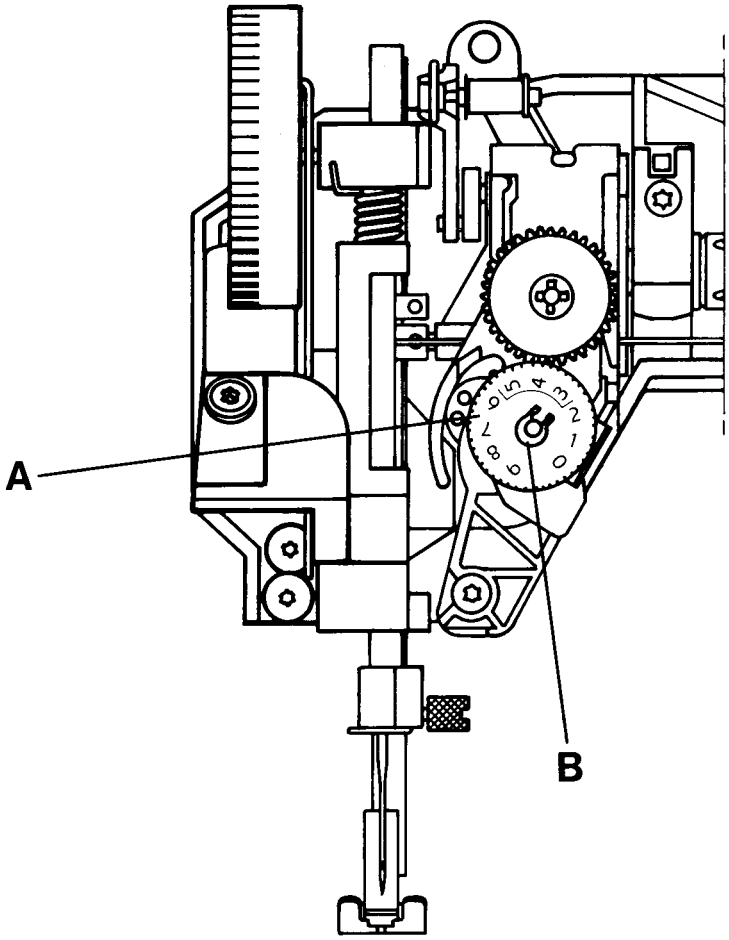

25. Setting the thread take-up spring

Check
The thread take-up spring should have completed its movement when the tip of the needle reaches the fabric but not the needle eye.
The control should be done when sewing straight stitch in cotton fabric.

Adjustment
Turn the thread tension body with a screw driver until a correct thread take-up is obtained.

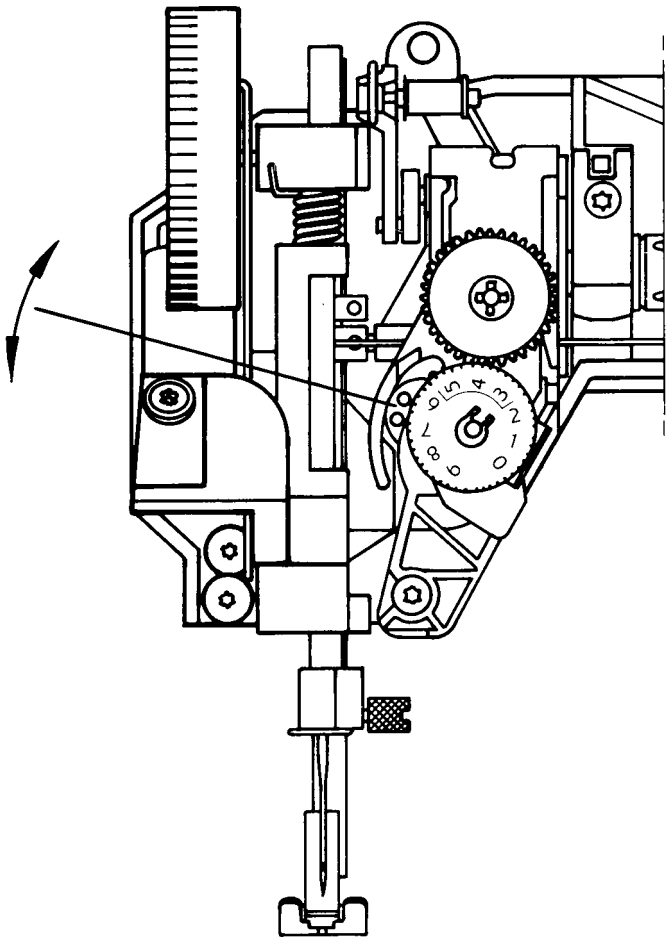

26. Max. speed/smooth-running

Check
The max. speed of the machine shall be between 750 and 850 revs./min at normal mains voltage. This is valid when the machine has room temperature and after running 1 min.

Adjustment
1. Turn the potentiometer (A) on the underside of the circuit board unit until a correct speed is obtained.
   The potentiometer can be reached through the base plate.

NOTE! The speed/smooth-running of the machine is influenced by the belt tensions, by the truing up of the spherical bearings of the arm- and lower shafts (can be knocked to smooth-running on the backside of each bearing position) and by the play in the hook- and worm gear.

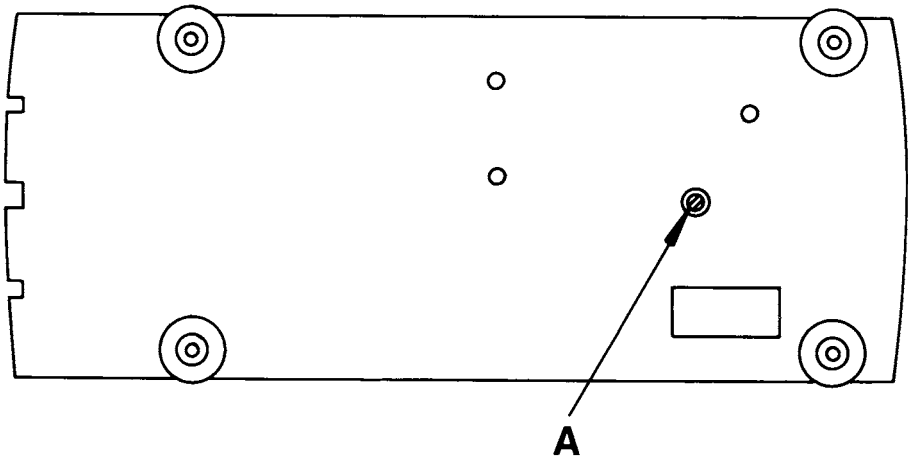

27. Feed dog lowering

Check
The feed dog should fall down when turning the stitch length dial in position feed dog lowering.

Adjustment
Loosen screw (A) and turn it back until the feed dog falls down exactly when the stitch length dial is set for position feed dog lowering.

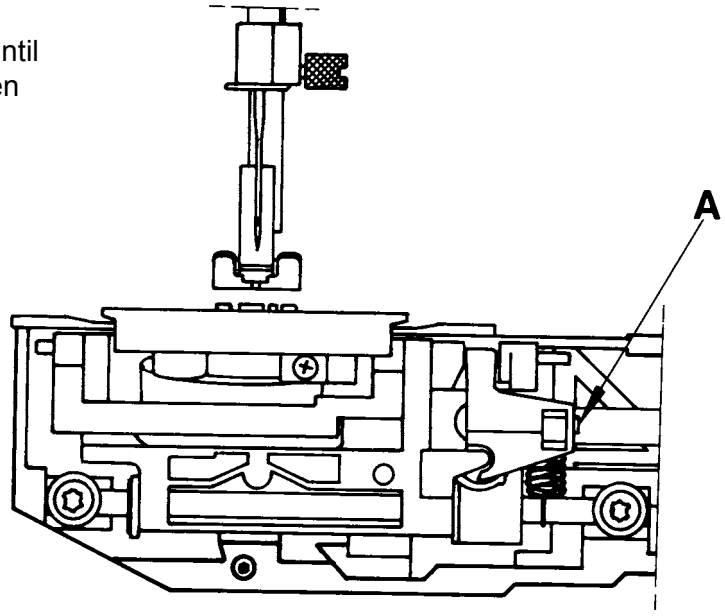

Rear cover

1. Loosen the 2 screws (A) under the handle, screw (B) i the rear corner of the base plate and screw (C) at the thread knife of the sewing head and expose (F) and remove the rear corner.
2. Carefully bend with a screw driver in the 2 recesses (D) under the stitch plate in order to expose the hook, and remove the rear cover.

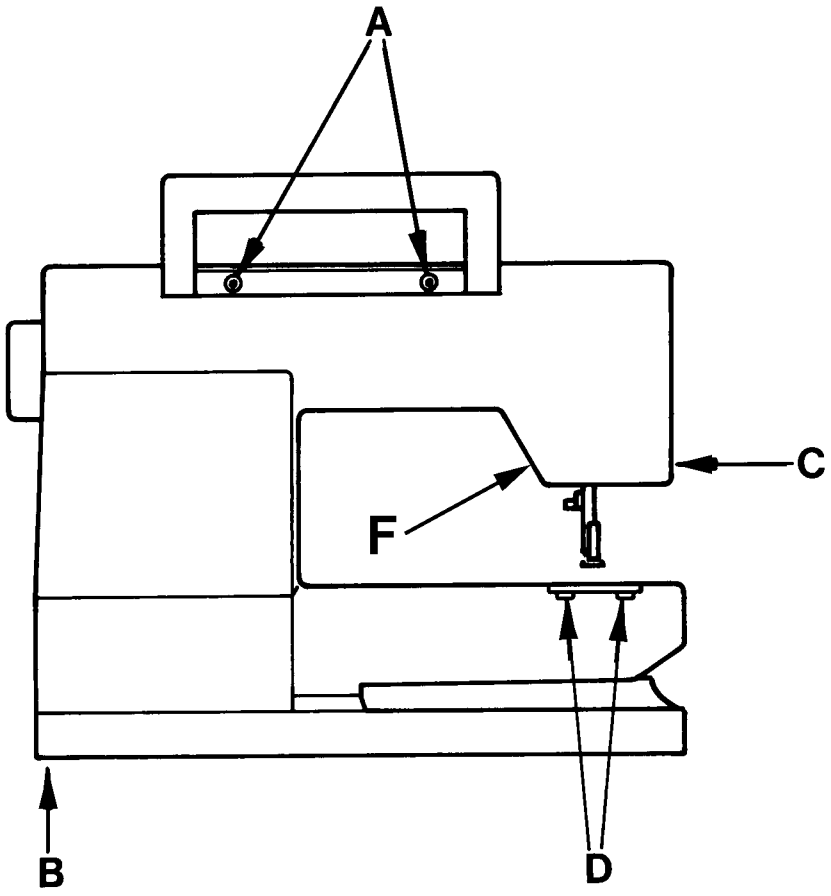

Upper rear cover - 300 series

Loosen the two screws (A) under the handle, screw (B) in the rear corner of the base plate and screw (C) at the thread knife of the sewing head. Expose (F) and remove the rear corner.

Lower rear corner - 300 series

1. Loosen the screw (E).
2. Cautiously bend with a screwdriver in the two sockets (D) under the stitch plate in order to expose the hook and remove the lower rear corner.

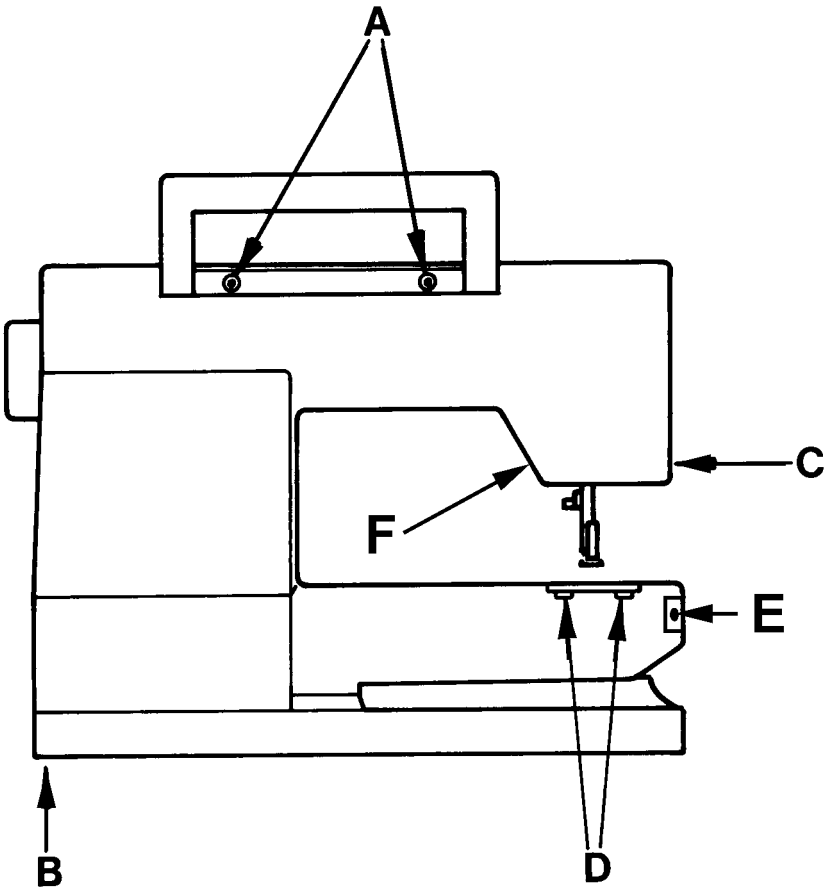

Front cover

1. Dismount rear cover .
2. Loosen the stitch selector dial (A), the stitch width dial (B) and the stitch length dial (C) by pulling them straight out.
3. Loosen the two screws (D) from behind and screw (E) in the front corner of the base plate.
4. Carefully bend away the front cover from the hand wheel and pull it straight out.

NOTE! When mounting, stitch display and pattern mechanism must be synchronized.

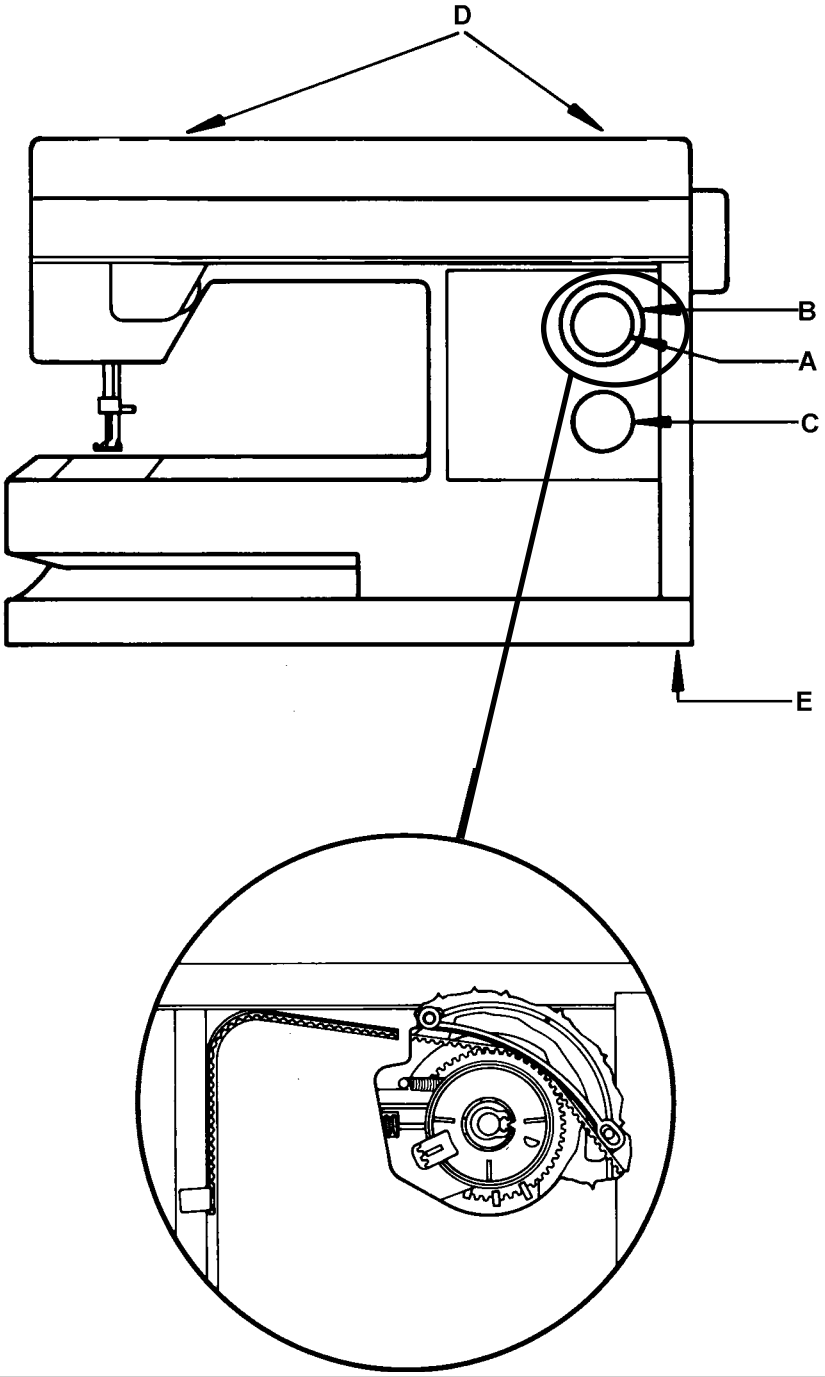

Sewing head

Dismounting

1. Dismount rear cover and front cover .
2. Loosen the light bulb.
3. Loosen screws (A) and (B).
4. Unhook the draw bar (C) from the lever arm (D) of the pattern mechanism and remove the sewing head.
5. Unhook the sewing head from the stud (E) of the thread take-up lever and the connecting rod (F).

Mounting

1. Hook on draw bar (C) to the lever arm (D) of the pattern mechanism.
2. Hook on the sewing head to the connecting rod (F) and the stud (E) of the thread take-up lever.
3. Place sewing head with its upper part into its guide (G).
4. Make sure that the presser foot lever is hooked on its lever arm.
5. Tighten the screws (A) and (B).

Thereafter set:

9. Centre position on straight stitching
10. Stitch width limitation/lifting height
11. Gap between the needle and the hook
13. Needle height
19. Bar tack position of the buttonhole
20. 21. Buttonhole balance
22. Stitch length balance, pattern stitches

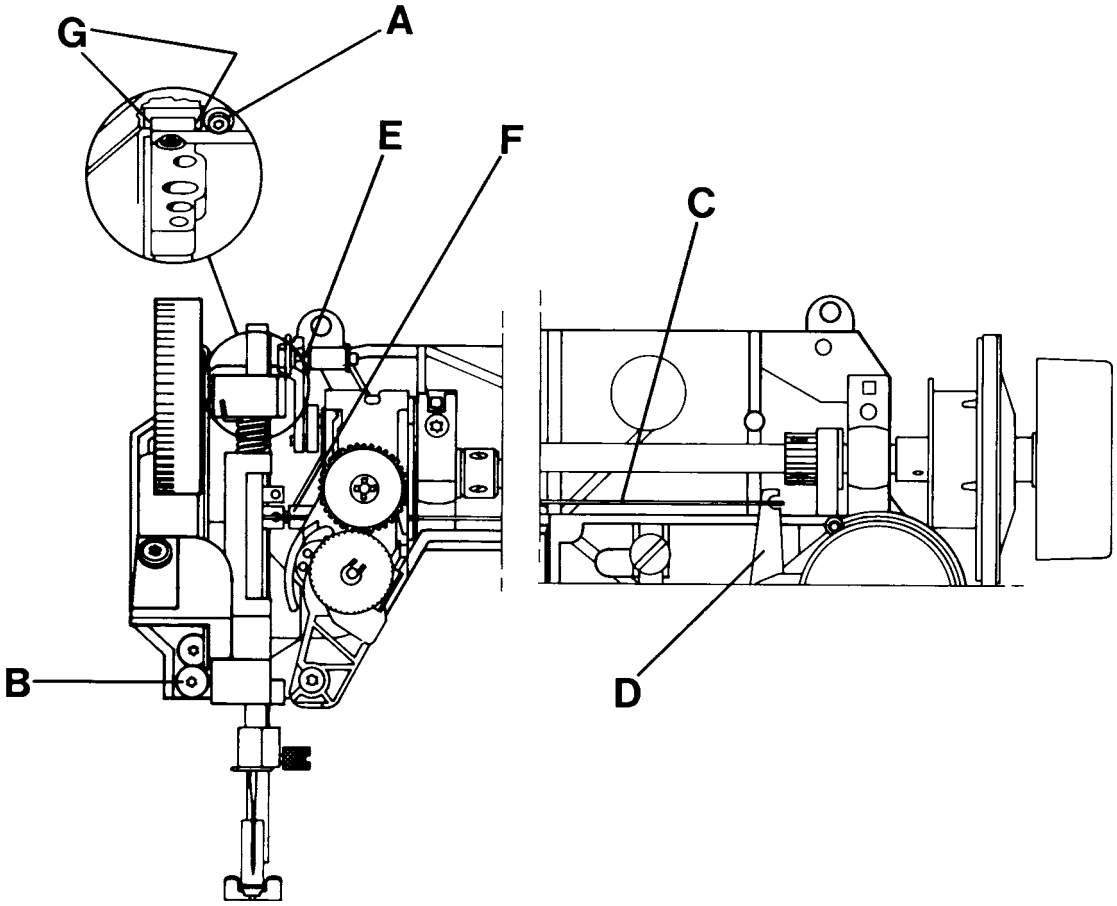

Circuit board unit

1. Loosen the 5 screws on the underside of the base plate and remove the base plate.
2. Loosen the motor cable (A) and the light cable (B) from the circuit board unit.
3. Remove the bottom plate from the base plate.
4. Carefully loosen snap device (C) and (D) in the base plate from the circuit board unit and pull them out in the direction of the arrow.

Thereafter check:

26. Max. speed of the machine

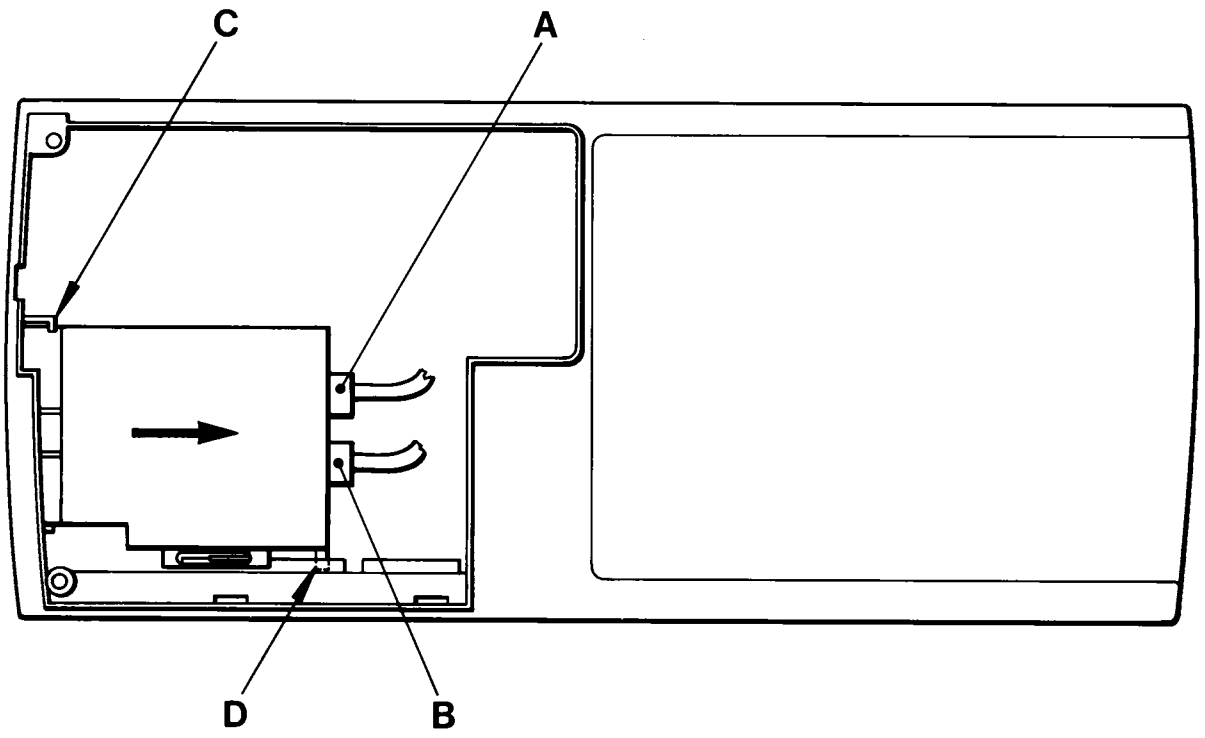

Pattern mechanism

Dismounting

1. Dismount rear coverand front cover .
2. Loosen screw (A) in the pattern mechanism.
3. Unhook draw bar (B) from the sewing head and draw bar (C) from the feeding unit.

Mounting

1. Hook on draw bars (C) and (D) to the pattern mechanism.
2. Place the pattern mechanism in its location and make sure that the cam guide (D) gets into its groove in the cam set and that the cam follower (E) is positioned correctly in relation to its cam curve.

Thereafter adjust:

8 . The position of the zig-zag cam follower in relation to the cam set
9 . Centre position of the needle in straight stitching
10. Stitch width limitation/lifting height
19. Bar tack position of the buttonhole
20.21. Buttonhole balance
22. Stitch length balance, pattern stitches

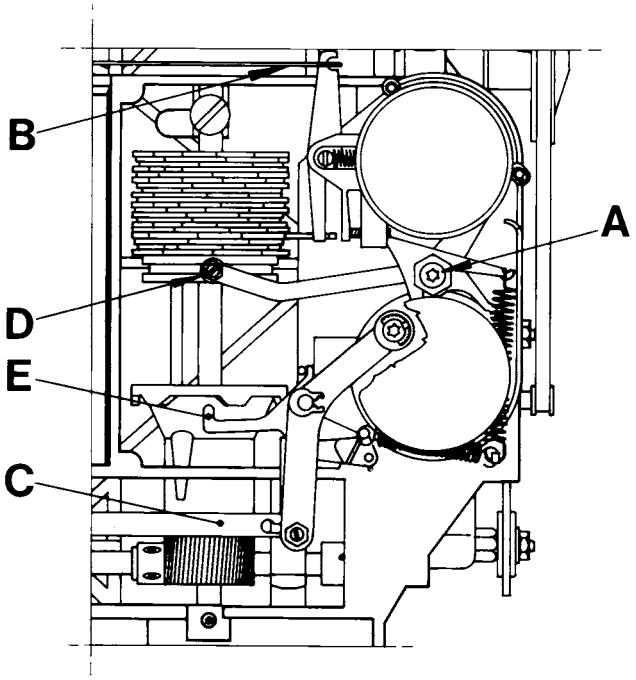

The parts of the pattern mechanism

Dismounting

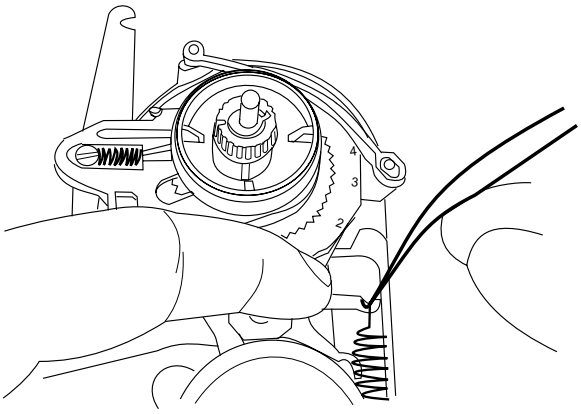

1. Unhook spring (A).

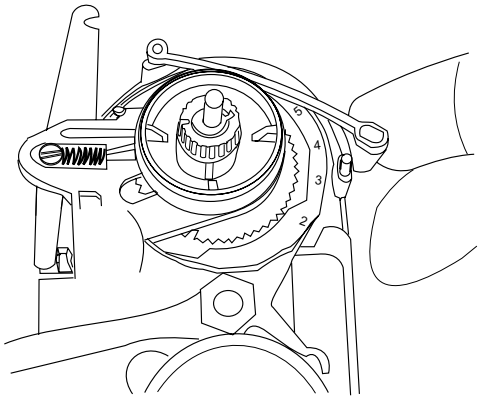

2. Remove the guide for the index tape (B).

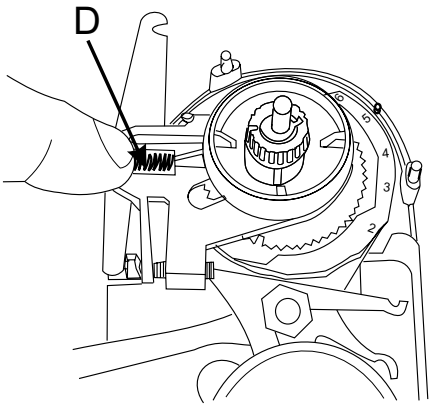

3. Unhook the spring (D).

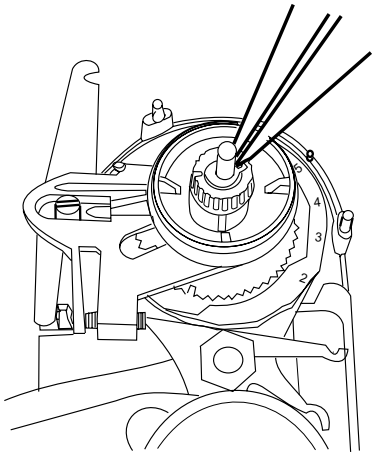

4. Remove the locking clip (C) with a plier

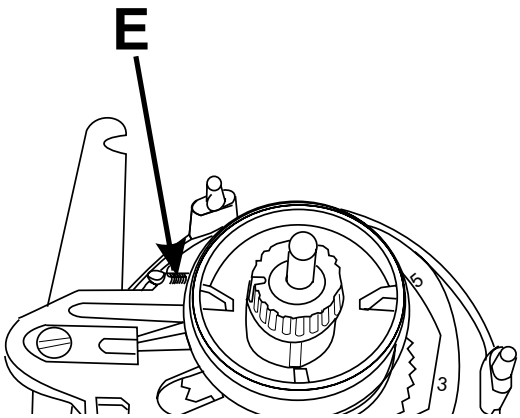

6. Unhook spring (E).

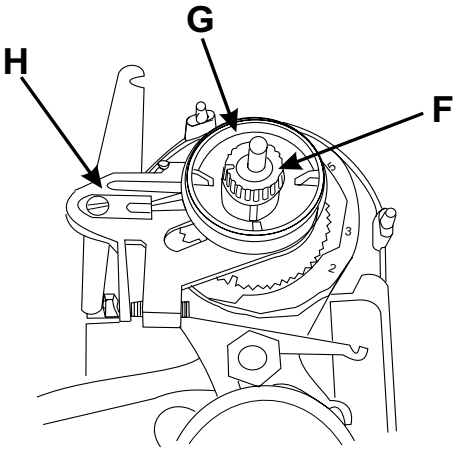

5. Pull out hub (F) and stitch width adjuster (G) together with the lifting arm (H).

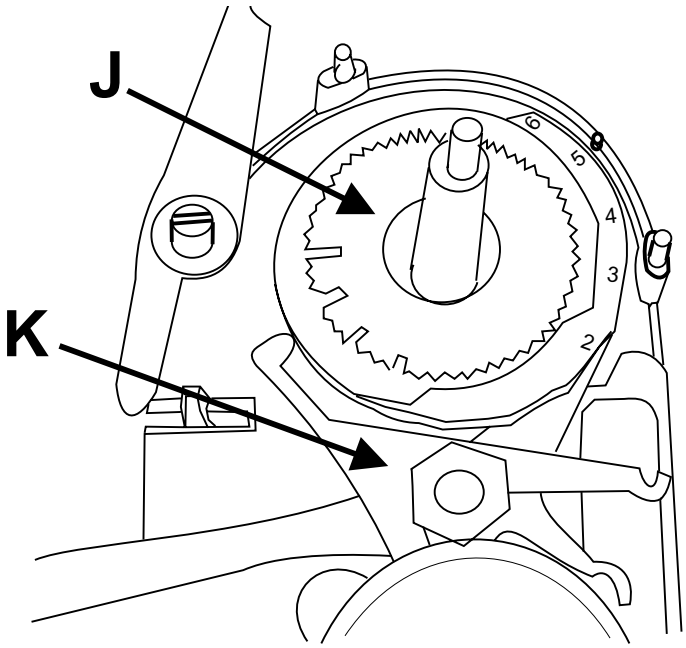

7. Dismount the Gear screw (J) and cam follower (K).

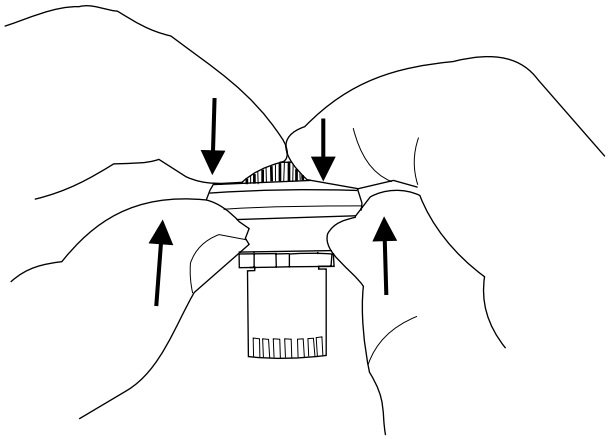

8 .Disconnect the hub and the stitch width wheel. Push on the hub from the top and on the stich width wheel from underneath.

10. Dismount locking washer (I) and lift out hub stitch length dial (J).
11. Dismount locking washer (K) and remove lever arm (L).
12. Spring (M), cam follower (N), lever arm (O) and stitch length curve (P) with the spring (Q) may now be dismounted.

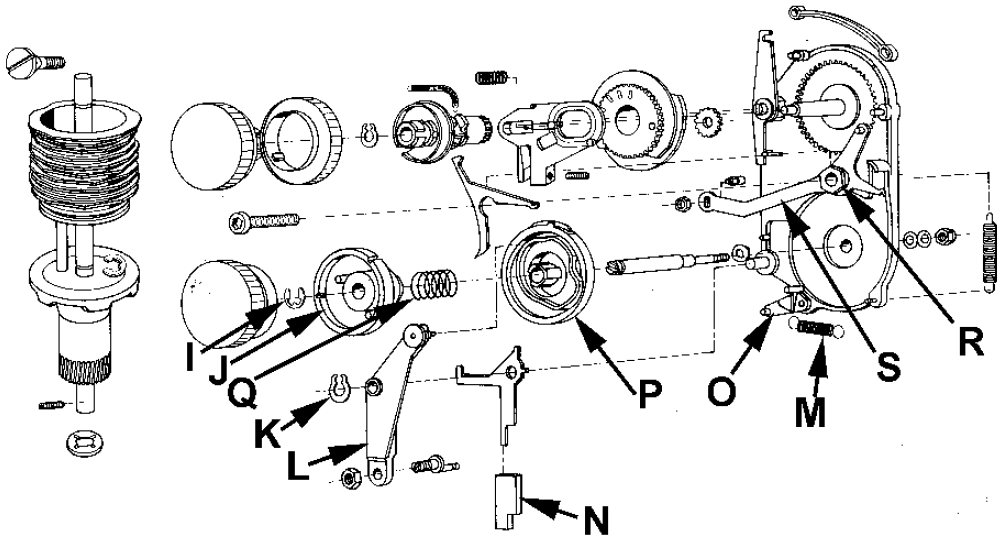

Mounting

1. Mount stitch length curve (P), lever arm (O), cam follower (N) and spring (M) Make sure that the stud of the lever arm (O) is in its groove in the cam follower (N).
2. Mount spring (Q), hub stitch length dial (J), locking washer (I) and stitch length dial.
3. Mount lever arm (L) and locking washer (K).

4. Put lever arm, cam gear (A) and eccentric, reverse feeding (B) into its position.

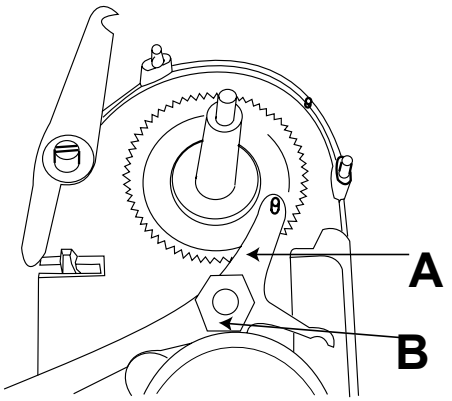

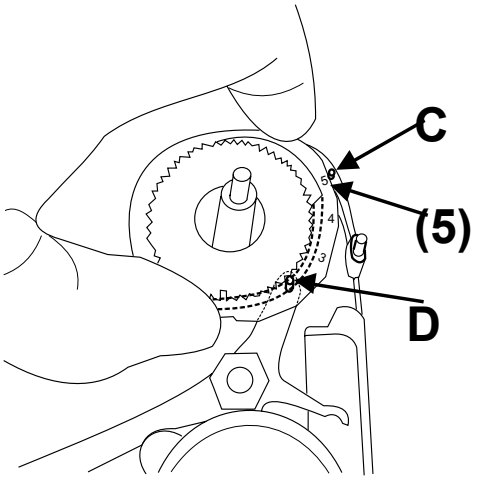

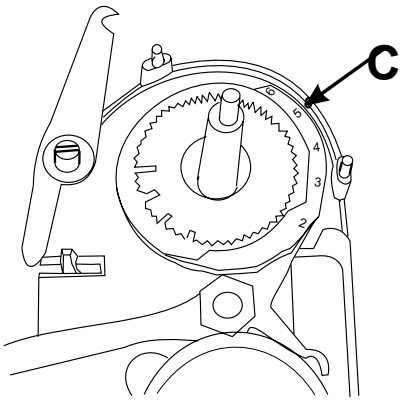

5. Put white gear curve so that figure , "5",
gets right in front of the index (C) and the groove in the underside over the lever arm stud (D) of the cam gear

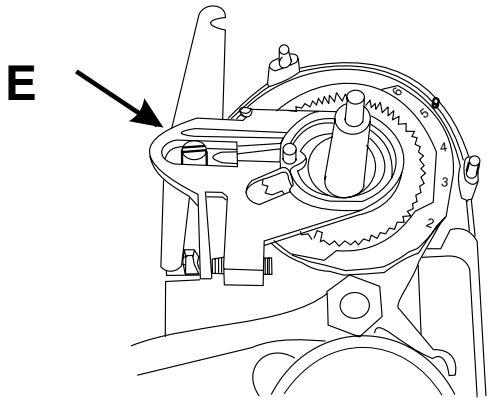

6. Put lifting arm (E) into position

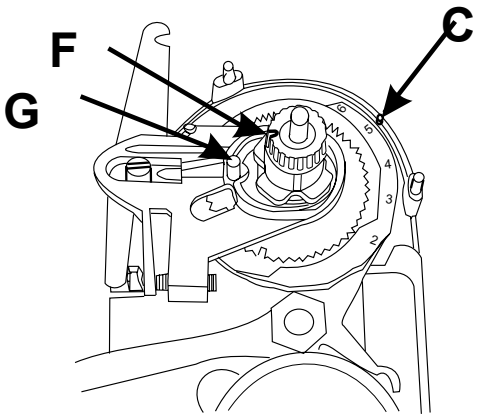

7. Mount hub so the hub's cut out (F) and lifting arm point (G) line up.
NOTE! Check that the figure is still right in front of the index (C)

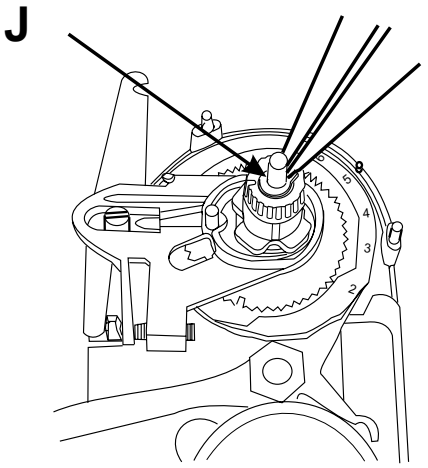

Mount locking clip (J),

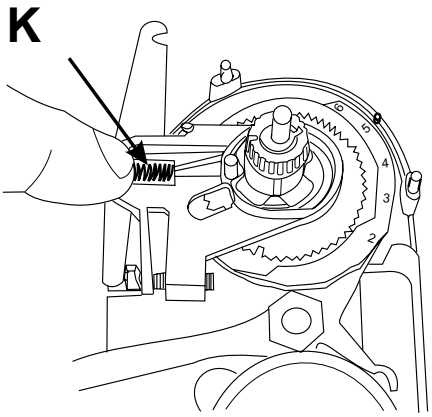

Mount the spring (K)

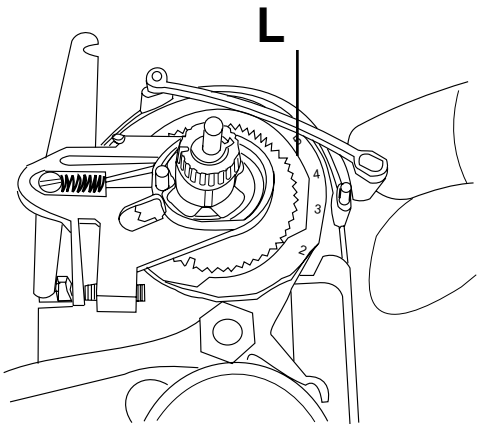

Mount the guide for the index tape (L)

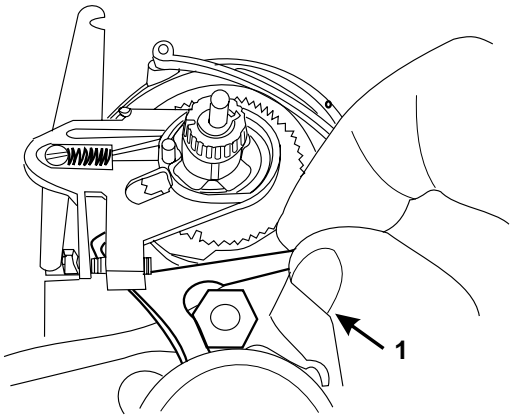

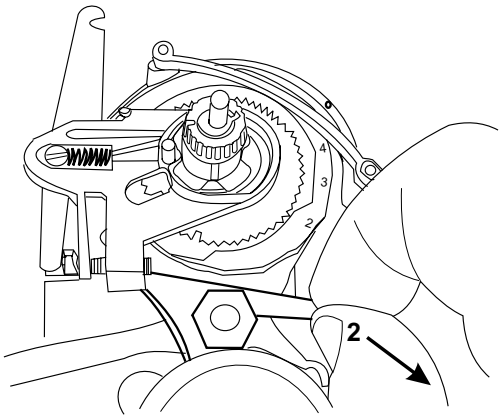

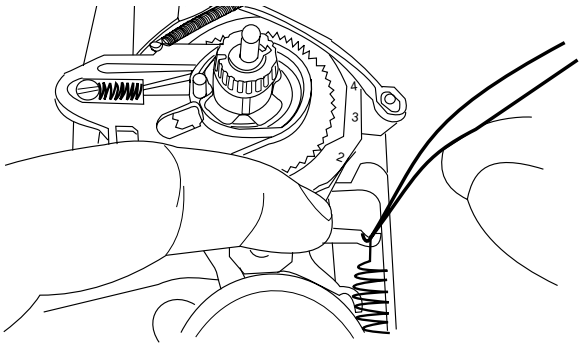

Put lever arm, reverse feeding into position and hook on the spring.

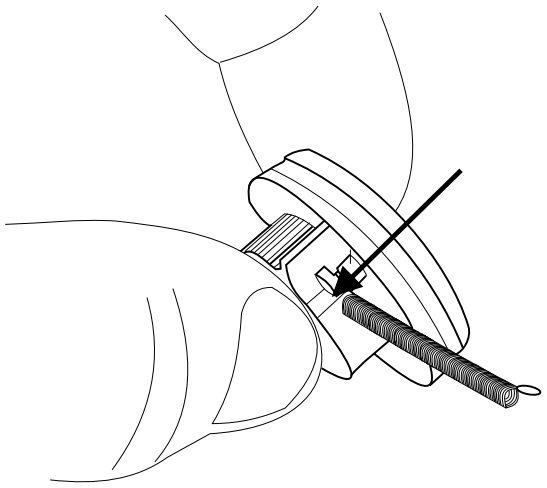

Hook on the spring on to the stitch width hub.

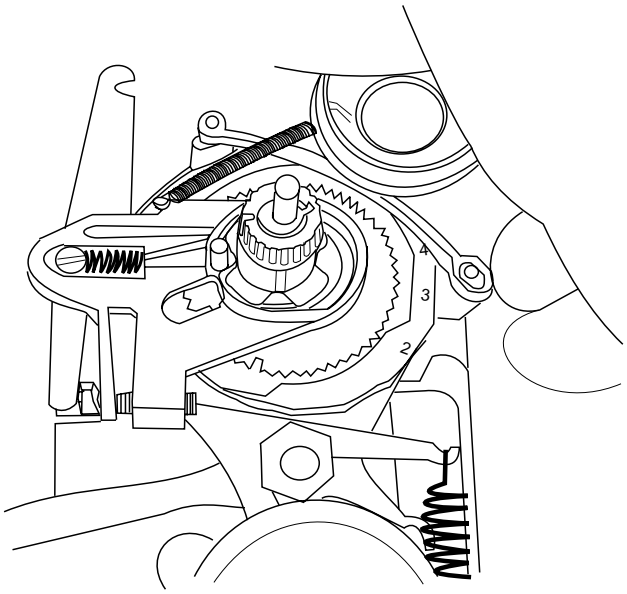

Hook on the spring on to the pattern mechanism

Fig 1

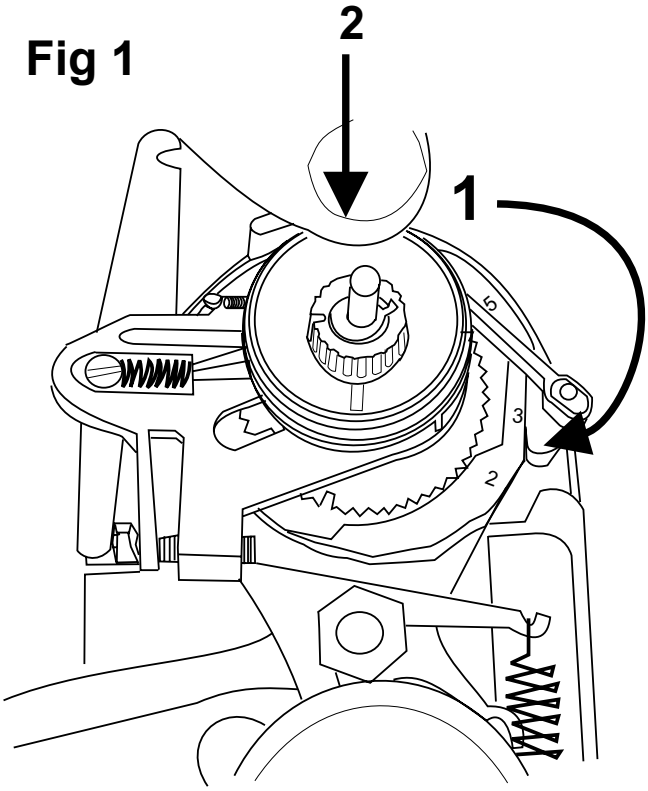

Fig 2

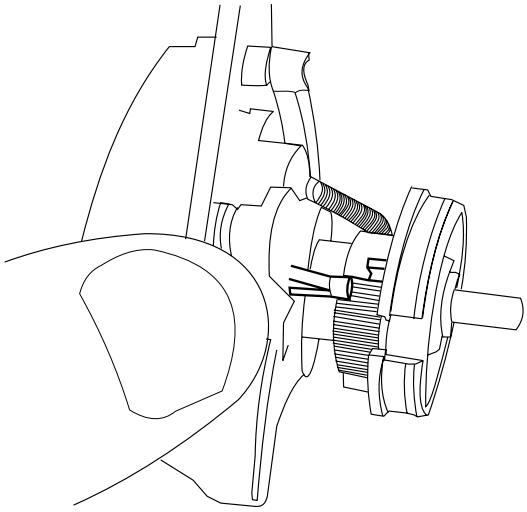

1.Mount the the stitch width hub - with out pushing it down- on the patten mechanism.
2.Turn the hub in the arrowed direction (1) so it comes according to Fig 2
3. Push down the the hub
4. Check the function on the hub by turning it to "0".

Feeding unit

Dismounting

1. Dismount rear cover and front cover.
2. Unscrew the 3 screws of the hook cover and remove it.
3. Unscrew the needle and the presser foot holder and set the feeding eccentric straight backwards.
4. Unhook spring (A) and unscrew screws (B).
5. Unhook draw bar (C) from lever arm (D) and lift off the complete feeding unit.

Mounting

1. Set feeding eccentric straight backwards.
2. Insert feeding unit.
3. Tighten screws (B).
4. Hook on draw bar (C) to the lever arm (D).
5. Mount presser foot holder and needle.

Thereafter adjust:

7. The setting of the feed dog in relation to the presser foot
14. The setting of the stitch plate (hook cover) in relation to the needle in the feeding direction
15. The sideways setting of the stitch plate (hook cover) in relation to the feed dog
16. Height of the hook
18. Feed dog height
19. Bar tack position of the buttonhole
20.21. Buttonhole balance
22. Stitch length balance, pattern stitches

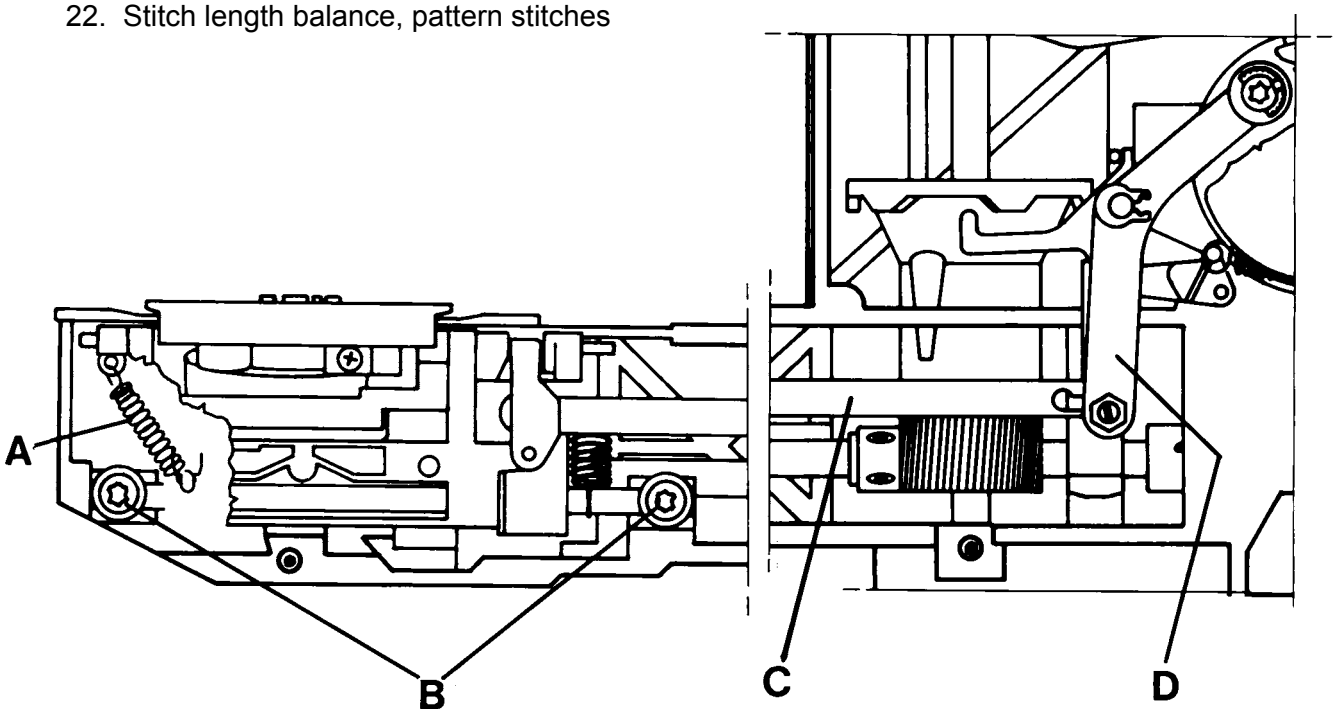

Bobbin device

Needle- and feeding movement shall be disengaged when the ”bobbin shaft with its rubber ring” is pushed against the ring (B), and is engaged when it is pushed back.

Dismounting
1. Dismount rear cover and front cover .
2. Loosen screw (A).

Mounting
1. Keep the bobbin device in extended position.
2. Push ring (B) against the hand wheel.
3. Push the rubber ring (C) of the bobbin device against ring (B).
4. Tighten the screw.
5. Check.

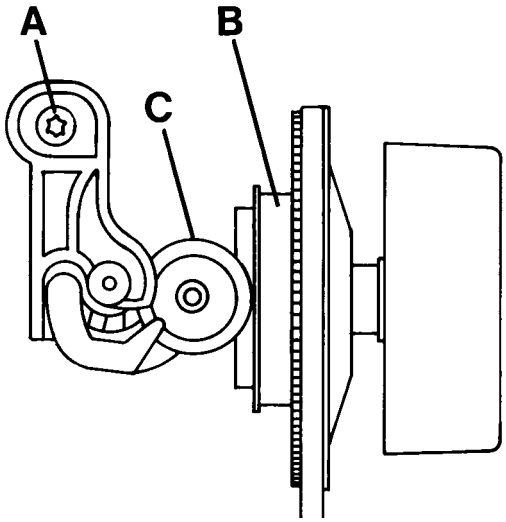

Hook compl.

Dismounting
1. Dismount rear cover and front cover .
2. Dismount the feeding unit .
3. Loosen screw (A) and lift hook compl. (B).

Mounting
1. Turn the hand wheel until the highest part (C) of the eccentric points backwards and is within the recess (D) in the arm.
2. Place the hook so that its tip (E) points straight backwards.
3. Press the hook shaft downwards so that it is without play and tighten screw (A).
4. Mount the feeding unit .

Note ! Machines with a serial number lower than X6131255 have an older version of the feeding eccentric. There the distance between the feeding eccentric and the arm is 5 mm
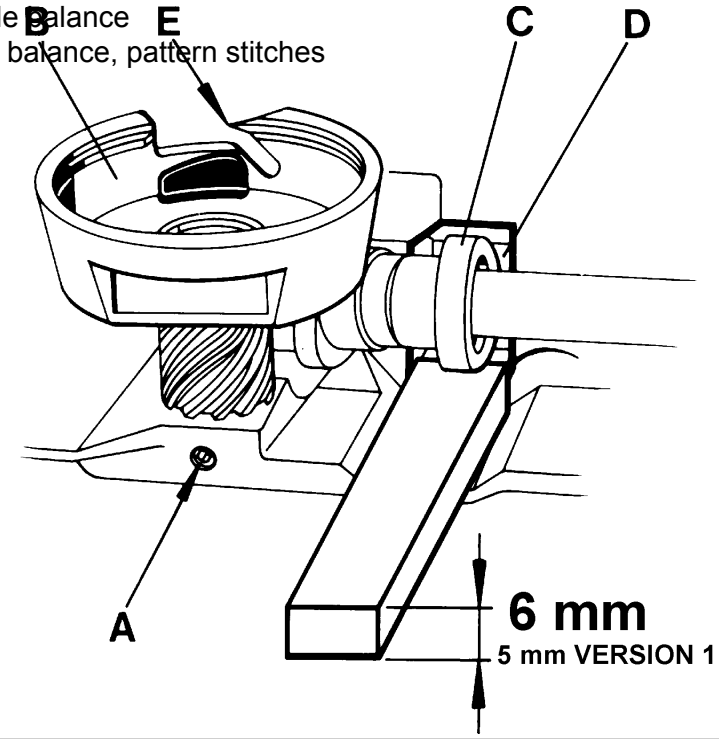
Thereafter set:
2. The setting of the hook in relation to the feeding eccentric
1. The play of the hook gear
7. The setting of the feed dog in relation to the presser foot
11. Gap between the needle and the hook
12. The timing of the hook and the needle
13. Needle height
14. The setting of the stitch plate (hook cover) in relation to the needle in the feeding direction
15. The sideways setting of the stitch plate (hook cover) in relation to the feed dog
16. Height of the hook
18. Feed dog height
19. Bar tack position of the buttonhole
20. 21. Buttonhole balance
22. Stitch length balance, pattern stitches