PARTS CATALOGUE FOR COMPUTERIZED SEWING MACHINE

PC-8500
SUPER GALAXIE 2100

1. 1999.

CONTENTS

(1) PRINCIPAL PARTS..... 2

(2) UPPER SHAFT AND NEEDLE BAR 4

(3) FEED MECHANISM 8

(4) ROTARY HOOK, THREAD GUIDE
AND THREAD CUTTING.....10

(5) LAMP, MAIN PC BOARD ASSEMBLY AND MOTOR UNIT ..12

(6) EMBROIDERY UNIT 14

(7) ACCESSORY 16

(1) PRINCIPAL PARTS

No.	CODE	NAME	REMARKS
1	XA1785203	Rear cover PC-8500	
	XA1785204	Rear cover S.G.2100	
2	XA1786051	Spool pin	
3	XA3499051	Spool pin shaft	
4	XA5821001	Bobbin presser	
5	062301616	Screw 3 x 16	
6	021300106	Nut 3	
7	XA5822151	THREAD GUIDE HOLDER ASSY	CHG
8	136681001	Screw B3 x 8	
9	XA5955101	Thread guide plate assembly	
10	136681001	Screw B3 x 8	
11	XA1794005	Thread guide cover	
12	087411415	Screw B4 x 14	
13	XA1795151	Carrying handle	
14	XA6459001	Carrying handle shaft	
15	048040346	Stop ring E4	
16	XA1797050	Handle holder	
17	X57908051	Screw S4 x 10	
18	XA1799202	Face plate	
19	X51895051	Fixing face plate	
20	X80321001	NT thread cutter assembly	
21	XA0199001	CS stop ring CSTW-8	
22	XA1800101	Needle threader lever knob	
23	XA1801001	Needle threader lever	
24	X51469001	Needle threader lever shaft	
25	138260001	Spring	
26	XC0508000	Washer	CHG
27	XA6320000	Shaft presser plate	
28	513159001	Washer	
29	138433001	Screw B3 x 6	
30	060401616	Screw 4 x 16	
31	XA1803151	Free arm cover	
32	0A6400806	Screw 4 x 8F	
33	XA6188151	Base plate	
34	X57908051	Screw S4 x 10	
35	XA1805051	Rubber cushion A	CHG
36	XA1806051	Base cover	
37	060400616	Screw M4 x 6	
38	XA6727002	Front cover PC-8500	
	XA6727003	Front cover S.G.2100	
39	123518001	Stop ring CS	
40	XA1808051	S key top	
41	XA1809050	SV connecting block	
42	XA3247001	SS button PC-8500	

No.	CODE	NAME	REMARKS
42	XA1810001	SS button S.G.2100, CANADA	
43	XA1811051	Reverse sewing button	
44	XA1812051	NP button	
45	XA1813051	Thread cutting button	
46	087411415	Screw B4 x 14	
47	XA1814351	Cover	
48	U12017001	Screw 3 x 6	
49	XA2864202	Belt cover	
50	060400616	Screw M4 x 6	
51	XA1816151	ACCESSORY TABLE ASSY	CHG
52	138644051	Accessory table notched spring	
53	X51434000	Sponge	
54	XA1819051	Set plate U	
55	060300416	Screw 3 x 4	
56	XA1820050	Set plate D	
57	X57908051	Screw S4 x 10	
58	X50442001	Screw cover	
59	XA1821106	Case assembly	CHG
60	X56668000	Case felt	
61	129074000	Felt	
62	125440000	Case felt	
63	XA2442001	Embroidery unit band	
64	XA2831000	Foaming sheet	
65	146200001	Stop ring CS4	
66	048025346	Stop ring 2.5	
67	XA4718000	Washer 5.5 x 9	
68	XA2438001	Decoration plate	
69	XA3451001	Case mark	
70	026050135	Washer	
71	XA6654001	Decoration plate PC-8500	
	XA6654002	Decoration plate S.G.2100	

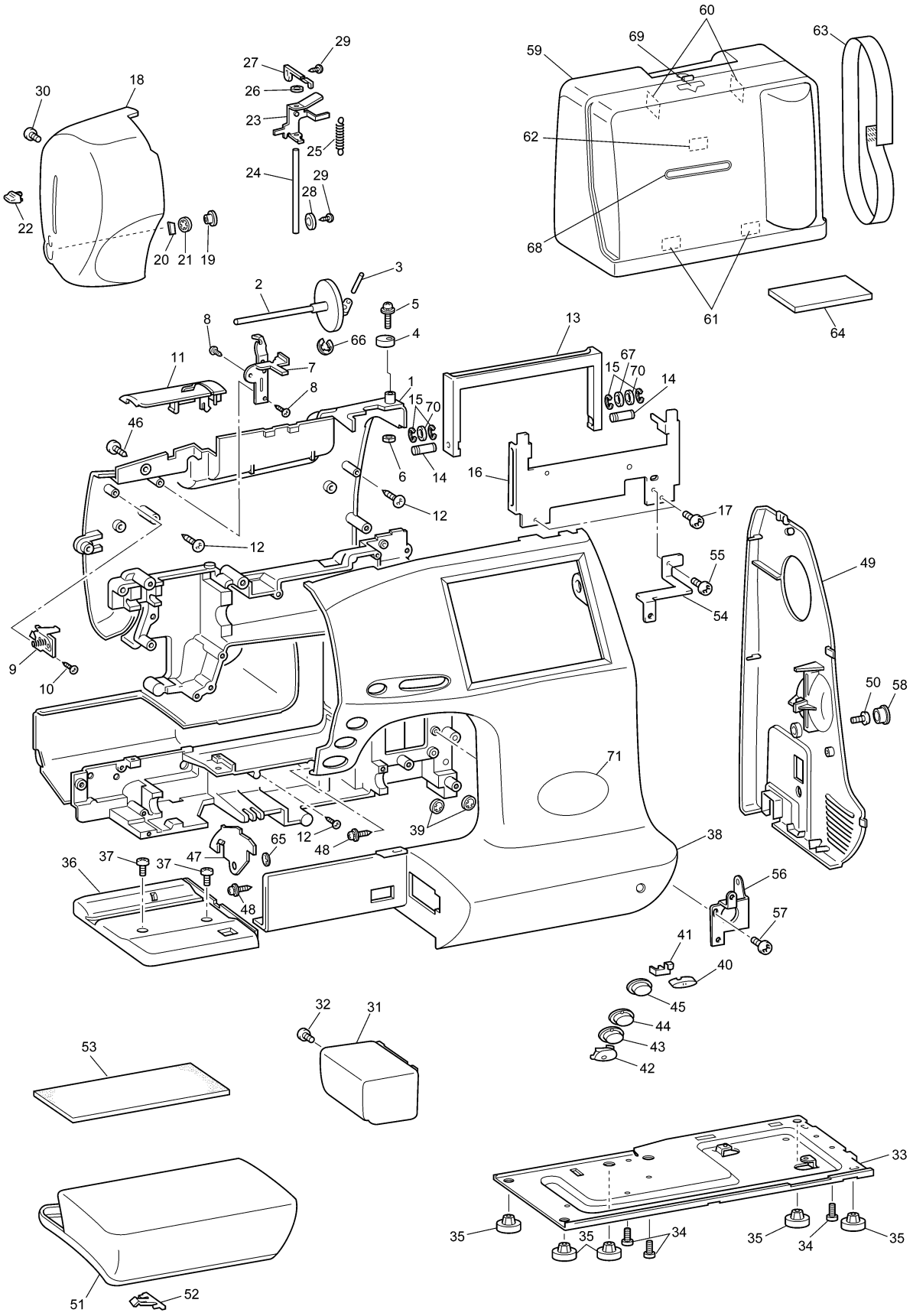
60
69
63
59
29
27
18
30
26
23
25
62
24
29
28
22
20
21
19
68
3
2
5
61
64
8
66
4
13
11
7
67
15
70
14
8
1
15
70
46
6
14
16
12
17
12
55
49
54
9
10
50
58
71
12
39
65
48
38
37
47
37
36
48
56
57
41
40
45
32
31
44
43
53
42
33
35
35
34
35
34
35
51
52

(2) UPPER SHAFT AND NEEDLE BAR

No.	CODE	NAME	REMARKS
1	XA1824001	Upper shaft assembly	
2	X52478001	Presser plate A	
3	X57908051	Screw S4 x 10	
4	X53125001	Timing belt 176 x L031	
5	XA1830051	Tension pulley assembly	
6	138172001	Screw 4 x 10DA	
7	XA4922251	ASSY, NP PCB 955	CHG
8	533777001	Screw 4 x 8DB	
9	XA2198051	Needle bar supporter assembly	
10	XA1839051	Needle threader shaft assembly	
11	129839001	Spring	
12	XA1841001	Needle threader slider	
13	XA1842051	Needle bar supporter stud A	
14	X56551050	Needle bar supporter stud C	CHG
15	014400432	Screw 4 x 4	
16	XA1843150	Set plate	
17	060300616	Screw 3 x 6	
18	XA1844151	Needle release lever assembly	CHG
19	XA1847051	Needle release lever shaft	
20	048025346	Stop ring E2.5	
21	XA1848051	Spring	
22	0A2300806	Screw 3 x 8B	
23	X57758051	Spring	
24	X55983150	Needle threader position setter	
25	012400432	Screw 4 x 4	
26	X55984151	NEEDLE BAR HOOK STAND ASSY	CHG
27	012400432	Screw 4 x 4	
28	X55990001	Needle bar guide	
29	060300416	Screw 3 x 4	
30	061300516	Screw M3 x 5	
31	X55991051	Needle bar crank rod assembly	
32	X58237001	Spring	
33	XA2389051	Needle bar crank	
34	132051001	Screw 3.57L	
35	XA1849101	Needle bar assembly	
36	XZ0002051	Needle clamp screw	
37	XA5718051	Needle clamp pin	CHG
38	XA1851000	Needle bar thread guide	
39	008020306	Screw 2 x 3	
40	XA1854001	Threader hook assembly	
41	014401632	Screw M4 x 16	
42	X56851051	Nut	
43	XA1856051	Spring	

No.	CODE	NAME	REMARKS
44	XA1857051	Needle bar supporter stud holder	
45	XA1859051	Needle bar supporter stud	
46	X56464001	Needle bar supporter arm	
47	048025346	Stop ring E2.5	
48	XA0649051	Screw S4 x 14	*1
49	X57822101	Spring	
50	X58511100	Washer	
51	X50559050	Nut	
52	XA1860150	Washer	
53	062301006	Screw 3 x 10	
54	XA1861051	Spring	
55	XA2115101	Needle plate	CHG
56	X80321001	Lower thread cutter	
57	X56828151	Needle plate cover	
58	X50487001	Screw M4	
59	X81166001	Wire assembly	CHG
60	060400816	Screw 4 x 8	
61	XA6199001	Wire guide plate D	
62	060400816	Screw 4 x 8	
63	XA6200001	Wire link assembly	
64	048030346	Stop ring E3	
65	XA1862051	Thread take-up lever assembly	
66	XA1864050	Thread take-up lever plate	
67	008020306	Screw 2 x 3	
68	XA1865051	Thread take-up lever stud	
69	048050346	Stop ring E5	
70	XA1866001	Washer	
71	X57913051	Screw S4 x 16	CHG
72	XA5854001	Presser bar	
73	XA1868051	Presser foot lifter	
74	XA6190001	Stud for presser foot lifter	
75	X52760051	Screw 6 x 12	
76	XA1870051	Presser bar clamp assembly	
77	137736051	Spring	
78	XA6935001	Spacer	
79	XA0649051	Screw S4 x 14	
80	137748101	Zigzag presser foot	
81	XA5855001	Presser holder assembly	
82	XA6899001	BH switch plate assembly	
83	XA2222001	PT holder	
84	X58035001	Cloth selecting sensor	
85	XA6493001	PT lever	
86	012300632	Screw M3 x 6	
87	XA1894051	Spring	

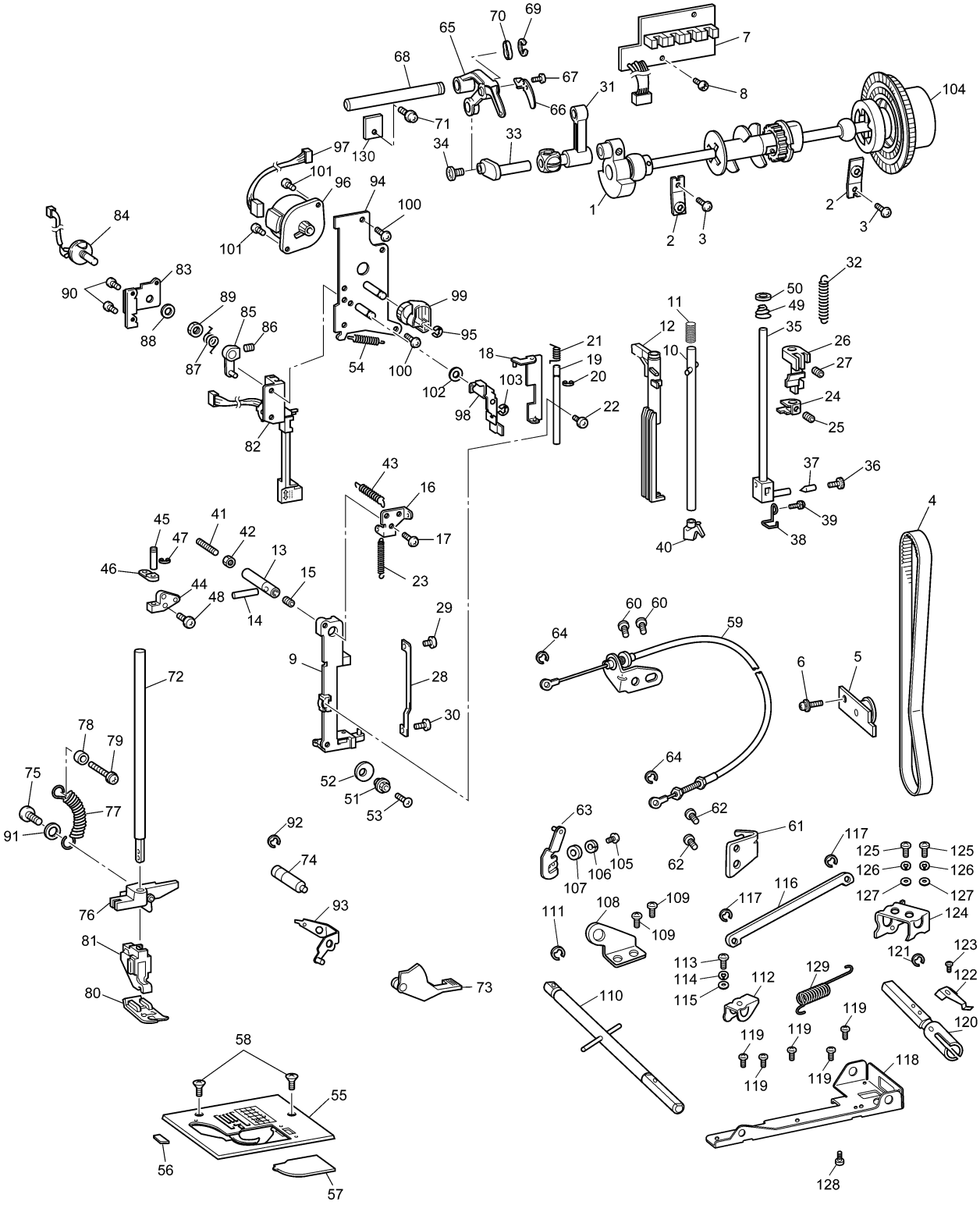

69
70
65
68
67
7
8
31
66
104
71
130
34
33
97
101
96
94
100
1
2
3
84
83
90
89
85
86
88
87
99
95
54
100
102
98
103
18
21
19
20
22
11
12
10
32
50
49
35
26
27
24
25
82
43
16
17
23
37
36
39
38
40
4
45
47
41
42
13
15
46
44
48
14
29
60
60
59
64
9
28
30
6
5
72
78
79
75
77
91
52
51
53
64
62
63
61
117
125
125
126
126
127
127
92
74
107
106
105
62
116
117
108
109
109
111
124
76
93
81
121
123
113
114
115
112
129
122
80
73
110
119
120
119
119
119
119
118
58
55
56
57
128

(2) UPPER SHAFT AND NEEDLE BAR

No.	CODE	NAME	REMARKS
88	026060235	Washer M6	
89	X52569001	Nut #1	
90	060300816	Screw M3 x 8	
91	U82249001	Washer	
92	048050346	Stop ring E5	
93	XA6191001	Lifter assembly	
94	XA1989151	ZPM holder assembly	
95	048030346	Stop ring E3	
96	Z26291001	BP483523LM26ZPM	
97	XA2050001	ZPM lead wire assembly	
98	XA2866101	Zigzag lever	
99	XA1995050	ZIGZAG CAM	CHG
100	X57908051	Screw S4 x 10	
101	060300416	Screw 3 x 4	
102	X53027000	Washer	
103	048030346	Stop ring E3	
104	X59879051	Balance wheel	
105	XA6252001	Screw 4 x 10	
106	028040242	Washer	
107	026040236	Washer	
108	XA6202001	Left shaft holder B	
109	060400616	Screw 4 x 6	
110	XA6203101	Shaft L assembly	
111	048060346	Stop ring E6	
112	XA6205001	Shaft link assembly	
113	XA6252001	Screw 4 x 10	
114	028040242	Washer	
115	026040236	Washer	
116	XA6210001	Shaft link connecting rod	
117	048020346	Stop ring E2	
118	XA6213001	Right shaft holder	
119	060400616	Screw 4 x 6	
120	XA6214101	Shaft R	
121	048060346	Stop ring E6	
122	XA6215101	Spring plate	
123	060260316	Screw 2.6 x 3	
124	XA6249101	Shaft stopper assembly	
125	XA6252001	Screw 4 x 10	
126	028040242	Washer	
127	026040236	Washer	
128	018300531	Screw 3 x 5	
129	XA6253101	Spring	
130	X50532001	Presser plate	ADD
131	XC3183051	FELT	ADD

*1 : ~ C0XXXXXXX (2000.MAR.PRODUCT)

49	052401406	Screw, Pan (S/P Washer) M4 × 14

D0XXXXXXX ~ (2000.APR.PRODUCT)

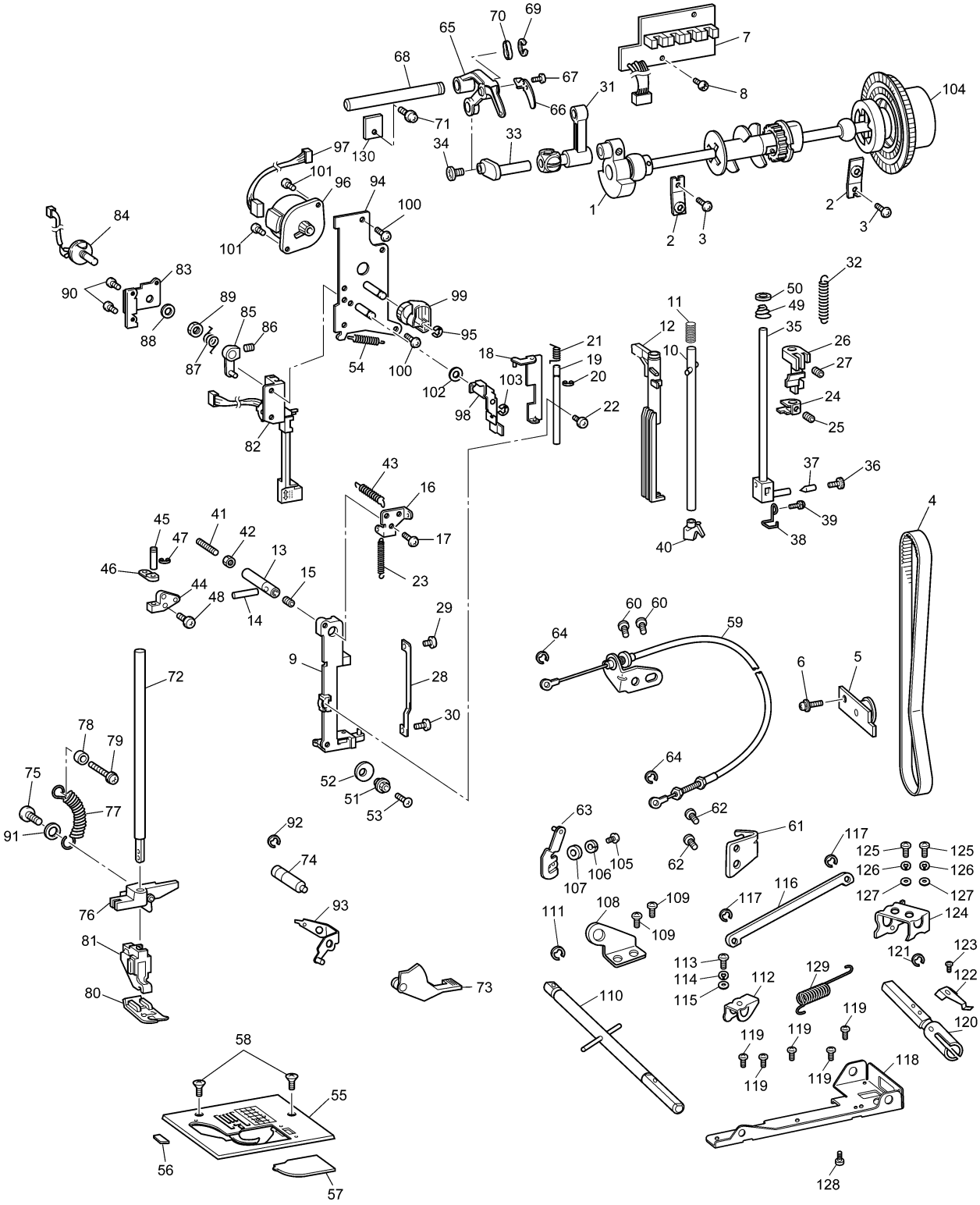

69
70
65
68
67
7
8
31
66
104
71
130
34
33
97
101
96
94
100
1
2
3
84
83
90
89
85
86
88
87
99
95
54
100
102
18
21
19
20
103
98
22
82
11
12
10
32
50
49
35
26
27
24
25
37
36
39
38
40
43
16
17
23
45
41
42
47
46
13
15
44
48
14
29
9
28
30
72
78
79
75
77
91
52
51
53
60
60
59
64
6
5
4
64
62
63
61
62
105
106
107
92
74
93
76
81
80
73
117
125
125
126
126
127
127
116
117
108
109
109
111
124
121
123
113
114
115
112
129
122
110
119
119
119
119
119
120
118
58
55
56
57
128

(3) FEED MECHANISM

No.	CODE	NAME	REMARKS
1	XA1895051	Feed rod assembly	
2	XA2185050	Feed rod supporting plate	
3	XA1898001	Spring F	
4	XA1899001	Spring S	
5	XA1901250	Horizontal feed shaft	
6	XA1902051	Horizontal feed arm assembly	
7	014500532	Screw 5 x 5	
8	048060346	Stop ring E6	
9	X59915051	Washer	
10	048050346	Stop ring E5	
11	XA1905051	Horizontal feed plate	
12	060400816	Screw 4 x 8	
13	XA1907151	Feed bar	
14	X59916051	Screw	CHG
15	012400432	Screw 4 x 4	
16	XA1909001	Feed dog	
17	060300616	Screw 3 x 6	
18	XA1910051	Feed bar shaft	
19	048025346	Stop ring E2.5	
20	014400432	Screw 4 x 4	
21	132420000	Horizontal feed shaft bushing	
22	132421001	Bushing presser	
23	X57908051	Screw S4 x 10	
24	XA1911051	Spring	
25	XA5857050	Horizontal-feed shaft supporter	
26	052401406	Screw 4 x 14	
27	XA1913051	Drop plate	
28	XA5858051	Drop knob	
29	XA2199051	Spring	
30	XA5859050	Spring	
31	137977000	Washer	
32	XA5860051	Drop guide plate	
33	060300516	Screw 3 x 5	
34	X57908051	Screw S4 x 10	CHG
35	XA1916050	FPM holder A	
36	XA1917050	FPM holder B	
37	Z26303001	BP483523LM28FPM	
38	XA2046001	FPM lead wire assembly	
39	060300416	Screw 3 x 4	
40	0A4400806	Screw 4 x 8DA	
41	XA1920151	Feed adjusting assembly	
42	XA1922151	F gear	
43	XA2972001	Spring	
44	X53330050	Washer	

No.	CODE	NAME	REMARKS
45	XA1924050	Feed adjusting shaft	
46	048050346	Stop ring E5	
47	X59915051	Washer	
48	XA2189050	Rubber	
49	XA0649051	Screw S4 x 14	
50	XA1927051	Feed regulator slide block	
51	X57908051	Screw S4 x 10	
52	XA6674051	SPM holder assembly	
53	XA5897050	PC board supporting plate	
54	060300616	Screw 3 x 6	
55	XA1932051	Side feed plate	
56	XA1933051	Side feed supporting plate	
57	XA2972001	Spring	
58	048040346	Stop ring E4	
59	Z26306001	BP483523LM29SPM	
60	XA2047001	SPM lead wire assembly	
61	060300416	Screw 3 x 4	
62	XA2189050	Rubber	
63	XA2192050	Side feed spacer	
64	052300606	Screw 3 x 6	
65	X57908051	Screw S4 x 10	
66	XA1935051	Spring	
67	XA6216000	Drop connecting	
68	XA6694101	Drop link A assembly	
69	XA6218001	Drop link B assembly	
70	XA6222001	Spring	
71	XA6223001	Spring	
72	048030346	Stop ring E3	

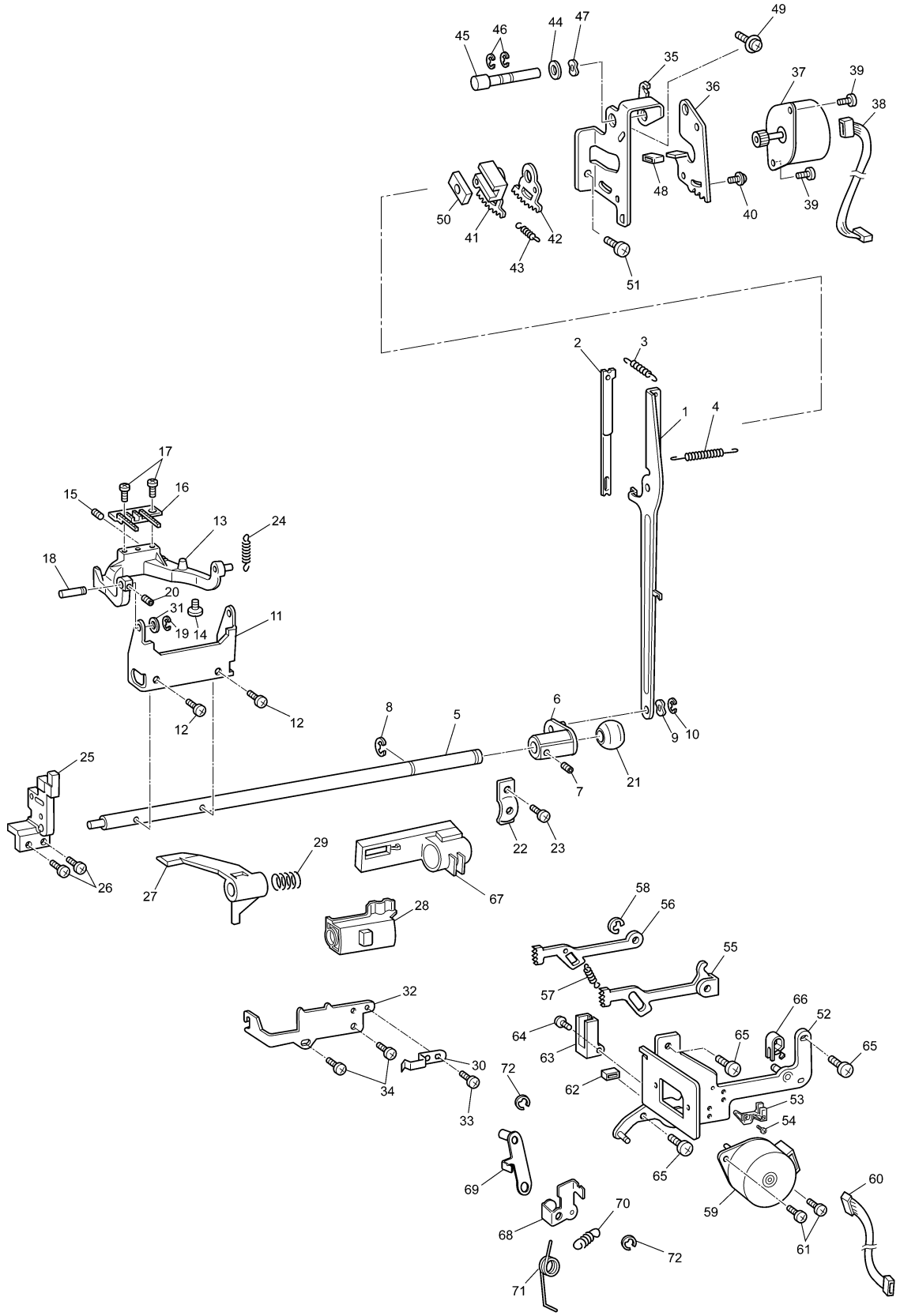

45
46
44
47
49
35
36
37
39
38
48
40
39
50
41
42
43
51
2
3
1
4
17
16
15
13
24
18
20
31
19
14
11
12
12
8
5
6
9
10
25
7
21
22
23
29
26
27
67
28
58
56
55
57
32
66
52
64
65
65
63
30
72
62
34
33
53
54
65
69
60
59
70
68
61
72
71

(4) ROTARY HOOK, THREAD GUIDE AND THREAD CUTTING

No.	CODE	NAME	REMARKS
1	XA5861151	Thread cutting assembly	
2	XA2848151	Movable blade assembly	
3	X56133001	Fixed blade	
4	XA5865051	Lower-thread guide arm assembly	
5	060400816	Screw 4 x 8	
6	060300516	Screw 3 x 5	
7	XA1968101	Lower shaft assembly	
8	132421001	Bushing presser R	
9	XA1975051	Bushing presser L	
10	X57908051	Screw S4 x 10	
11	XA2855101	Outer rotary hook assembly	
12	XA5869001	Inner rotary hook bracket assembly	
13	060400816	Screw 4 x 8	
14	X57177401	Inner rotary hook assembly	CHG
15	XA0360151	OUTER ROTERY HOOK SHAFT	CHG
16	XA2190000	Washer U	
17	XA2190000	Washer U	CHG
18	XA0362001	Washer	
19	014401632	Screw M4 x 16	
20	XA1980151	PHOTO DIODE ASSY	CHG
21	060020416	Screw M2 x 4	
22	XA1984251	PHOTO TRANSISTOR ASSY	CHG
23	052300606	Screw 3 x 6	
24	120454001	Stop ring CS4	
25	XA5872101	Bobbin winder assembly	CHG
26	XA5873101	Bobbin winder shaft assembly	CHG
27	XA2853101	Thread winder cover	
28	XA5876001	Bobbin base assembly	
29	XA2003001	Bobbin winder switch assembly	
30	062260516	Screw 2.6 x 5	
31	X57908051	Screw S4 x 10	
32	XA2006151	Thread guard plate assembly	
33	XA3066051	Roller supporting arm assembly	
34	XA5532000	Metallic AT roller	
35	048025346	Stop ring E2.5	
36	Z26300001	BP483523LM27ATP	
37	XA2053001	ATPM lead wire assembly	
38	060300816	Screw M3 x 8	
39	048030346	Stop ring E3	
40	XA2019051	Spring	
41	XA9103001	Thread guard cover assembly	CHG
42	XA2022051	SPRING	CHG
43	XA2023051	Washer	
44	XA5949100	Thread cutting shutter	CHG

No.	CODE	NAME	REMARKS
45	136681001	Screw B3 x 8	
46	XA2025050	Thread guard wire	
47	XA2953051	Thread guard	
48	085311415	Screw B3 x 14	
49	XA2223050	Thread guard wire	
50	XA9102051	RUBBER	CHG
51	052300606	Screw 3 x 6	
52	XA2027151	ASSY, THREAD SENSOR PCB	CHG
53	XA2031051	Sensor board holder	
54	052300606	Screw 3 x 6	
55	136681001	Screw B3 x 8	
56	XA2032051	Thread guard holder	
57	XA2035050	Thread guard	
58	048030346	Stop ring E3	
59	060300616	Screw 3 x 6	
60	X55260002	Spool presser C	
61	XA2935051	Thread guide plate	
62	060300616	Screw 3 x 6	
63	XA6226101	Tension releaser assembly	
64	XA2197051	Tension release wire	
65	048030346	Stop ring E3	
66	X57908051	Screw S4 x 10	
67	XA5533000	AT roller	
68	XA5534050	AT ROLLER WHEEL	CHG
69	137999000	Washer	
70	X81101001	Roller s upporting arm supply assembly	
71	XA2021002	Thread guide cover	
72	XC3183051	FELT	ADD

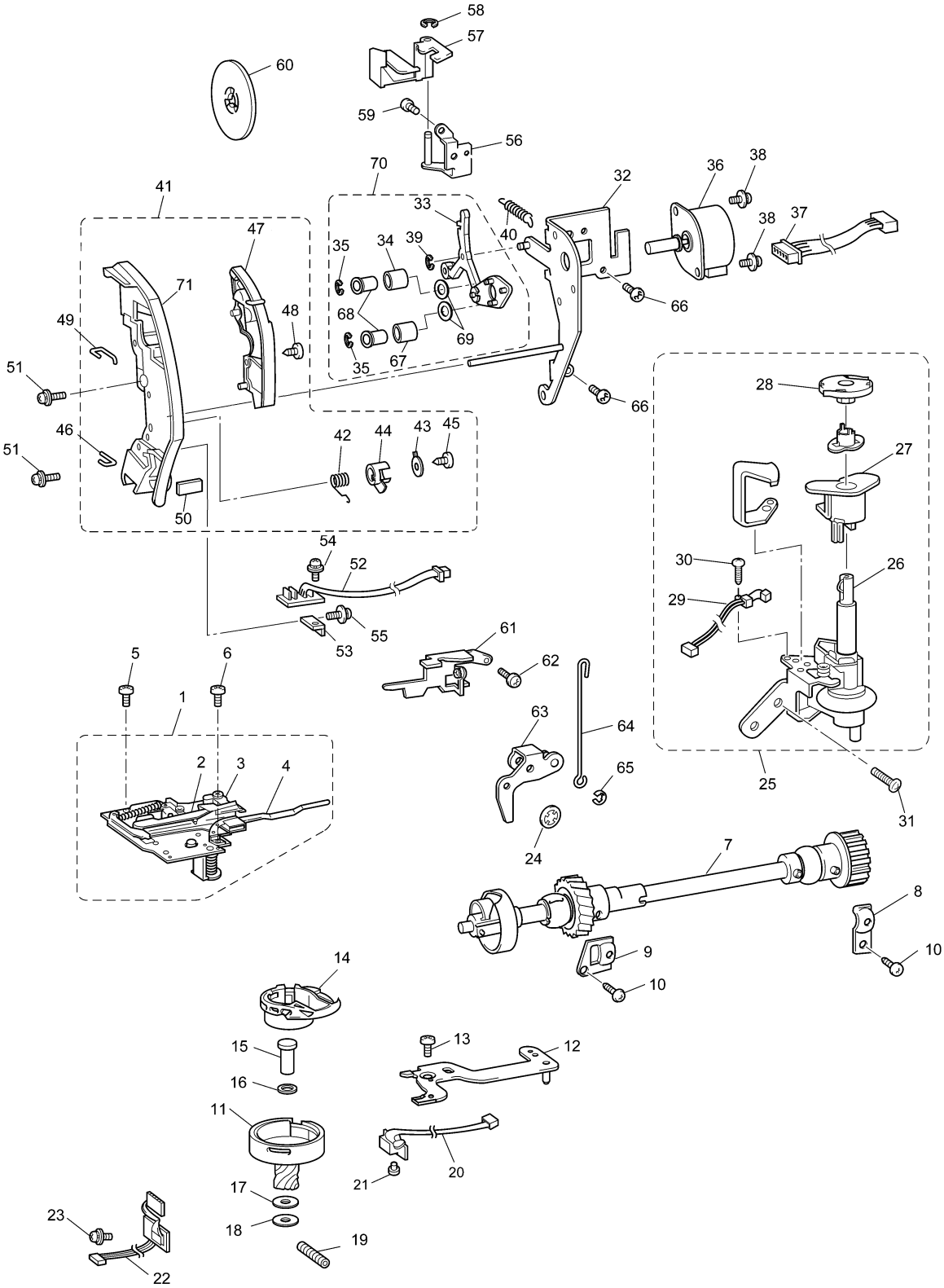
58
57
60
59
56
70
41
32
36
38
33
47
35
34
39
40
38
37
71
68
69
66
49
48
51
35
67
66
28
46
42
44
43
45
27
51
50
54
52
30
26
29
55
53
61
5
6
62
1
63
64
2
3
4
65
25
31
24
7
8
9
10
10
14
15
13
12
16
11
20
21
17
23
18
19
22

(5) LAMP, MAIN PC BOARD ASSEMBLY AND MOTOR UNIT

No.	CODE	NAME	REMARKS
1	XA2037001	WB sew-light bulb	
2	XA6905001	WBL socket assembly	
3	002261205	Screw 2.6 x 12	
4	XA5879051	Lamp holder	
5	060300416	Screw 3 x 4	
6	X81150251	MAIN PC BOARD ASSY (USA/CAN)	CHG
	X81151251	MAIN PC BOARD ASSY (IREL/DEU/BEL/GRA/FRA/NOR/ NLD/AUT/GRC/SWE/ESP/PRT/ ITA/FIN/CHE/DNK/GIB/ISL/MLT/ MCO/AUS/NZL/ZAF)	CHG
	X81169251	MAIN PC BOARD ASSY (KOR)	CHG
	X81152251	MAIN PC BOARD ASSY (OTHERS)	CHG
7	052300606	Screw 3 x 6	
8	X80938101	Power supply unit assembly for 120V	
	X80939101	Power supply unit assembly for 230V	
	X81070101	Power supply unit assembly for TAIWAN	
9	U32809001	Fuse ULTSC 3.15A for 120V	
	X56549001	G fuse 5AB for 230V	
10	X55397001	G fuse 3.15AA for 120V	
	XA0069001	G fuse 2AT-S for 230V	
11	X81043051	PIN JACK ASSY FOR 120V	CHG
	X81046001	Pin jack assembly for 230V	
12	0A5402505	Screw 4 x 25DB	
13	X81366001	LCD unit ASSY for U.S. A.	CHG
	X81367001	LCD unit ASSY	CHG
14	XA2220050	Board presser	
15	U06923002	Screw B3 x 10	
16	XA2094001	Inverter	
17	XA2097001	Lead wire assembly	
18	XA3220101	Inlet assembly for 120V	
	XA3229101	Inlet assembly for 230V	
	XA4326101	Inlet assembly for TAIWAN	
19	060400616	Screw M4 x 6	
20	X56302001	Connector 176496	
21	XA2096051	LEAD WIRE ASSY(120V)	CHG
21	XA3244001	Lead wire assembly for 230V	
22	048025346	Stop ring E2.5	
23	XA2225150	Inverter cover	
24	060300616	Screw 3 x 6	
25	XA1826001	Timing belt B173 XXL6.4	

No.	CODE	NAME	REMARKS
26	X55609001	Bolt (S/P Washer) M5 x 12	
27	XA3332251	MOTOR : MM-512-21	CHG
	XA3356251	MOTOR : MM-512-51	CHG
	XA6326151	MM-512-53 motor for KOREA	
28	XA2815151	POWER SUPPLY CORD FOR U.S.A., CANADA	CHG
	XA0070151	POWER SUPPLY CORD FOR EUROPE	CHG
	X59328151	POWER CORD FOR AUSTRALIA, NEW ZEALAND	CHG
	X57079001	Power supply cord for U.K	
	XA1291051	Power supply cord for KOREA	
	XA5820051	Power supply cord for CHINA	
29	XC6653151	FOOT CONTROLLER:FC-314-81-LF	CHG
30	XA2084001	SSVR board assembly	
31	X57005000	Washer 3	
32	136681001	Screw B3 x 8	
33	124240001	Band	
34	T31049001	Clip	
35	026040236	Washer 4	
36	X50532001	Presser plate	
37	XA2401050	WASHER	ADD
38	225833051	BUFFER RUBBER	ADD
39	236149001	PULLEY FLANGE	ADD

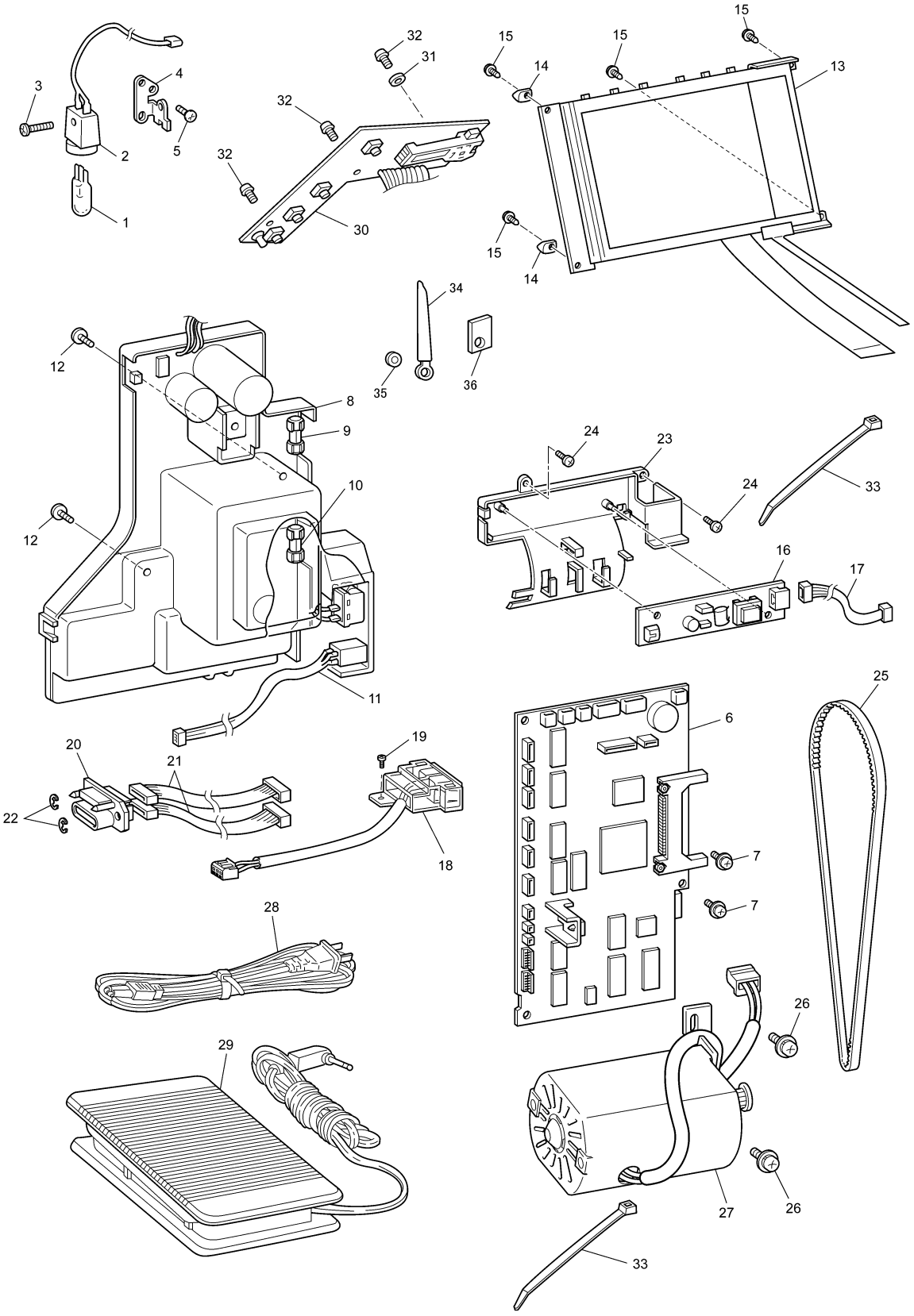
1
2
3
4
5
6
7
7
8
9
10
11
12
12
13
14
14
15
15
15
16
17
18
19
20
21
22
23
24
24
25
26
26
27
28
29
30
31
32
32
32
33
33
34
35
36

(6) EMBROIDERY UNIT

No.	CODE	NAME	REMARKS
1	XA2119151	MAIN FRAME ASSY	CHG
2	XA2122050	X driving gear pulley	
3	048040346	Stop ring E4	
4	X53838001	Washer	
5	Z26309001	BP483523LM30XPM	
6	052300606	Screw 3 x 6	
7	XA2123001	Timing belt 60S2M494	
8	XA2124051	X tension pulley assembly	
9	052300606	Screw 3 x 6	
10	052400806	Screw 4 x 8	
11	XA2128001	X guide shaft	
12	052400806	Screw 4 x 8	
13	XA2129151	X CARRIAGE ASSY	CHG
14	XA2133050	Gear	
15	048020346	Stop ring E2	
16	XA2134050	Y driving gear pulley	
17	025060235	Washer M6	
18	048040346	Stop ring E4	
19	X53838001	Washer	
20	XA4454001	Y CARRIAGE ASSY	CHG
21	XA4496100	Notched spring	
22	060300416	Screw 3 x 4	
23	XA4710100	Y slider	
24	052300606	Screw 3 x 6	
25	XA2123001	Timing belt 60S2M494	
26	XA2137051	Y tension pulley assembly	
27	XA2127050	Tension pulley	
28	025060235	Washer M6	
29	048040346	Stop ring E4	
30	052300606	Screw 3 x 6	
31	XA2139051	Y guide shaft	
32	048040346	Stop ring E4	
33	103810002	Washer	
34	XA2140101	X carriage supporter assembly	
35	XA2143150	X slider	
36	052400806	Screw 4 x 8	
37	XA2144250	X belt presser	
38	052400806	Screw 4 x 8	
39	Z26312001	BP4853523LM31YPM	
40	575039003	Screw 3 x 5DA	
41	060400616	Screw M4 x 6	
42	052300606	Screw 3 x 6	
43	XA4449001	XPM lead wire assembly	
44	XA4460001	YPM lead wire assembly	

No.	CODE	NAME	REMARKS
45	X56302001	Connector 176496	
46	037421616	Screw 4 x 16	
47	XA2150003	X carriage cover	
48	052400806	Screw 4 x 8	
49	XA2151001	ES main cover	
50	087411415	Screw B4 x 14	
51	XA2153101	ES side cover	
52	087411415	Screw B4 x 14	
53	XA2154101	ES base cover	
54	130157001	Rubber cushion	
55	XA2155050	Lock lever	
56	XA0814001	Shaft	
57	XA2157051	Spring	
58	U06923002	Screw B3 x 10	
59	025030336	Washer L3	
60	XA2158051	Lock release button	
61	XA2863001	ES spacer	
62	XA4456001	Y shutter	
63	060300416	Screw 3 x 4	
64	XA4457000	Cord guide	
65	XA4458001	X sensor PC board holder	
66	060300416	Screw 3 x 4	
67	XA4459001	X shutter	
68	060400616	Screw M4 x 6	
69	XA4447151	X SENSOR PC BOARD ASSEMBLY	CHG
70	052300606	Screw 3 x 6	
71	XA4451151	Y SENSOR PC BOARD ASSEMBLY	CHG
72	060020416	Screw 2 x 4	
73	137947001	Clip	
74	XA4596001	Oil guard plate	
75	124240001	Band #2	

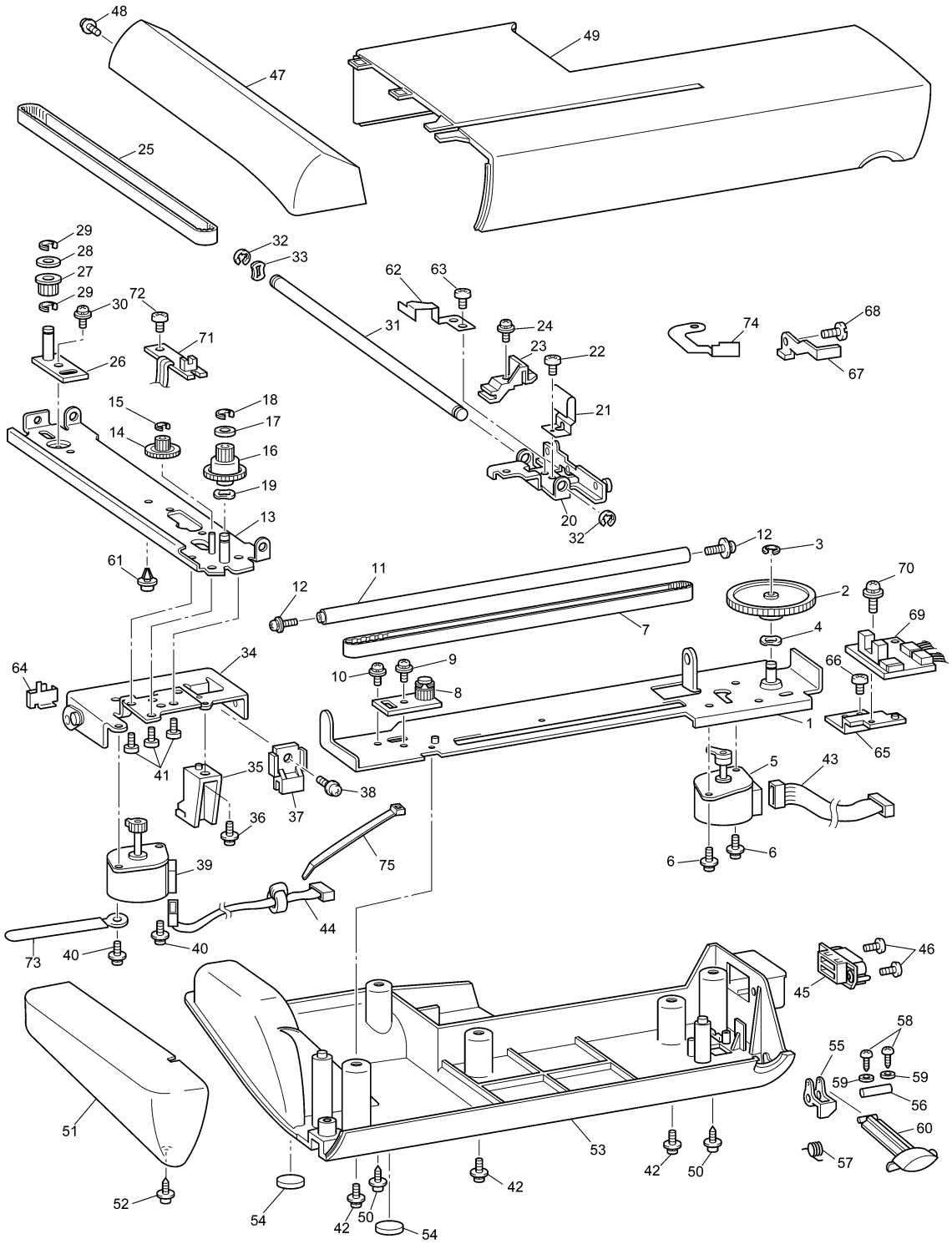
48
49
47
25
29
28
27
29
30
72
71
26
32
33
62
63
31
24
23
22
21
74
68
67
15
14
18
17
16
19
13
20
32
61
12
3
11
12
2
70
7
69
4
64
34
10
9
8
66
1
65
41
35
37
38
36
5
43
75
39
6
6
44
73
40
40
46
45
58
55
59
59
56
60
51
53
57
42
50
42
52
54
42
50
54

(7) ACCESSORY

No.	CODE	NAME	REMARKS
1	XA5891001	Embroidery foot assembly	
2	XC3098051	OVERCASTING STITCH FOOT ASSY	CHG
3	X59370051	Zipper foot	
4	X56409051	BLIND STITCH FOOT ASSY	CHG
5	X57789151	BH PRESSER FOOT	CHG
6	X53840301	Monogramming foot	
7	XA3811051	Bobbin for PC-8500	
	XA3812051	Bobbin for S.G.2100	
8	X54243001	Seam ripper	
9	130489001	Button fitting foot	
10	X58358001	Z needle set	
11	184783051	SCISSORS	CHG
12	184944001	Chalk pen	
13	XA4527001	Cleaning brush	
14	135793001	Eyelet punch	
15	XA2005051	Needle plate fixing metal	
16	X55467051	Screw driver M	
17	X55468051	Screw driver S	
18	130012003	Spool cap A	
19	130013003	Spool cap B	
20	XA3336051	Spool pin	
21	X59296151	TWIN NEEDLE (1PC)	CHG
22	127610000	Net	
23	X57045001	Felt	
24	XC4487051	ACCESSORY BAG	CHG
25	XA4595051	PATTERN SHEET	CHG
26	X80902002	Embroidery frame L for S.G.2100	
	X80902003	Embroidery frame L for PC-8500	
27	X80903002	Embroidery frame M for S.G.2100	
	X80903003	Embroidery frame M for PC-8500	
28	X80904102	Embroidery frame S for S.G.2100	
	X80904103	Embroidery frame S for PC-8500	
29	X80943001	Side cutter	
30	X59816101	WALKING FOOT ASSEMBLY	040095
31	XA4813051	Screw 3.57	
32	XA5904051	Screw 3.57(FOR ADAPTER)	CHG
33	X80948001	Grid sheet set for S.G.2100	
	X80948002	Grid sheet set for PC-8500	
34	XA6941001	Knee lifter lever assembly	
35	XA6126001	Presser adapter PC-8500	
	XA6126002	Presser adapter S.G.2100	
36	X81175001	Backing material for S.G.2100	
	X81175002	Backing material for PC-8500	

No.	CODE	NAME	REMARKS
37	194995111	INSTRUCTION BOOK (USA/CAN/IRL/GBR/FIN/TWN/ SGP/AUS/NZL)	CHG
	194995112	INSTRUCTION BOOK (Spanish)	CHG
	194995113	INSTRUCTION BOOK (DEU)	CHG
	194995114	INSTRUCTION BOOK (FRA)	CHG
	194995115	INSTRUCTION BOOK (CAN/DEU/FRA)	CHG
	194995116	INSTRUCTION BOOK (ITA)	CHG
38	X61023000	Carton	
39	X60944001	Pad assembly	
40	X60945001	Pad assembly	
41	X61153001	986SF assembly for U.S.A., CANADA	
42	X61184100	SF	
43	X61010000	Pad D	
44	X60925000	Embroidery pad	
45	X61014000	Accessory carton	
46	X61261001	Master carton for PC-8500	
	X61262001	Master carton for Europe	
	X61262002	Master carton for Europe (recycled mark)	
	X61263001	Master carton for N.L	
47	X60439100	Bag 630 x 630	
48	X60679051	BAG 450X400H	CHG
49	X81124001	Embroidery frame LL for S.G.2100	
	X81124002	Embroidery frame LL for PC-8500	
50	X61281000	Accessory pad D	
51	X61319051	BAG 750 X 600H	ADD
52	X60439151	BAG 630 X 630T	CHG

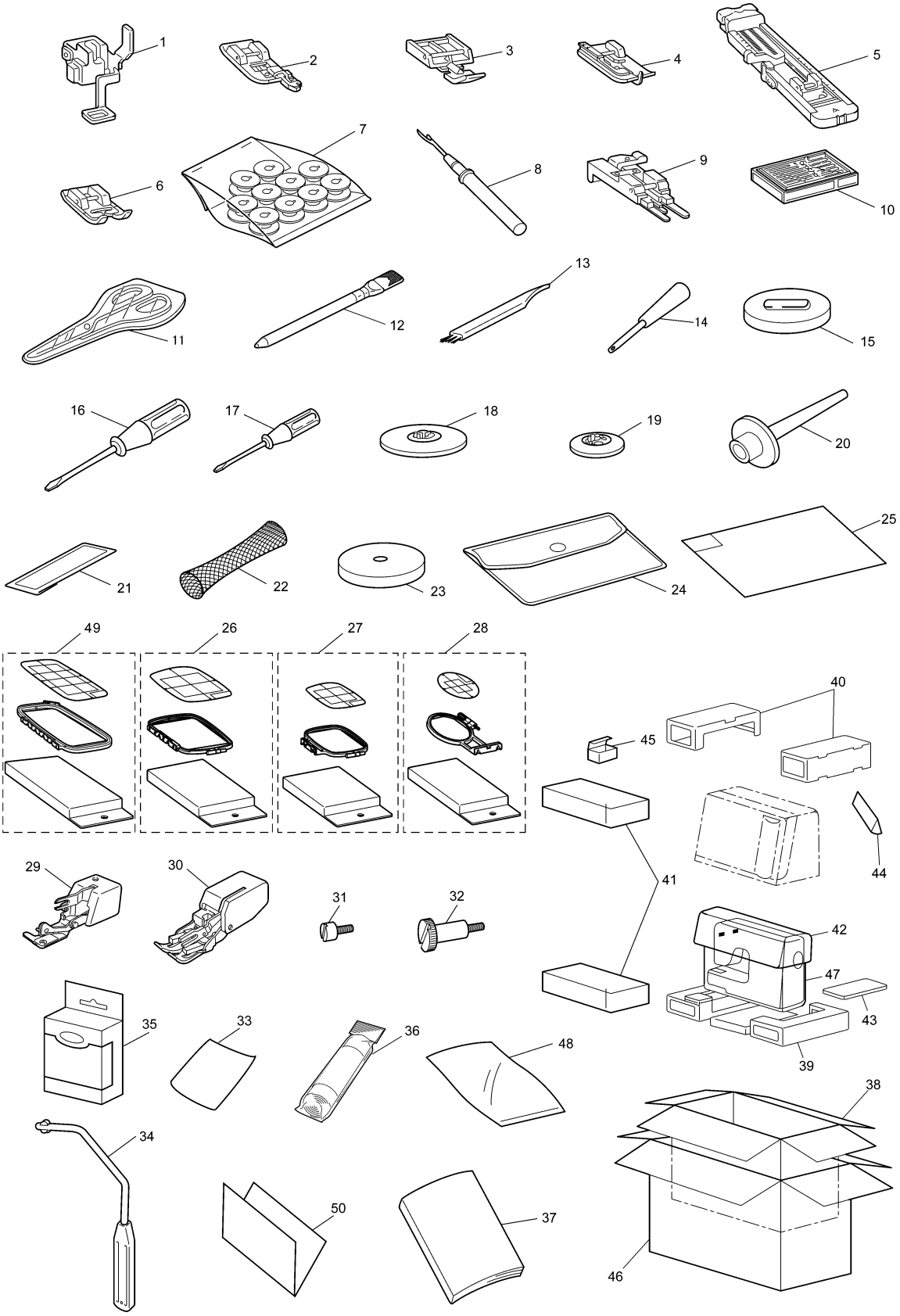
1
2
3
4
5
6
7
8
9
10
11
12
13
14
15
16
17
18
19
20
21
22
23
24
25
26
27
28
29
30
31
32
33
34
35
36
37
38
39
40
41
42
43
44
45
46
47
48
49
50

PC-8500
S.G.2100
H8100135