SERVICING MANUAL

DC3018 & DC3050

CONTENTS

WHAT TO DO WHEN ..... 1 - 3
FACE COVER 4
BED COVER 5
FRONT COVER ..... 6 - 7
REAR COVER 8
PRESSER BAR HEIGHT AND ALIGNMENT 9
NEEDLE DROP POSITION 10
NEEDLE BAR HEIGHT 11
NEEDLE TO HOOK TIMING 12
NEEDLE CLEARANCE TO SHUTTLE 13
BACKLASH (BETWEEN LOWER SHAFT GEAR AND SHUTTLE HOOK GEAR) 14
FEED DOG HEIGHT 15
ZIGZAG SYNCHRONIZATION 16
NEEDLE THREAD TENSION 17
STRETCH STITCH FEED BALANCE 18
REPLACEMENT AND ADJUSTMENT OF NEEDLE THREADER PLATE 19
CONNECTOR CONNECTION DIAGRAM 20
REPLACING THE PRINTED CIRCUIT BOARD “A” 21
REPLACING THE SLIDE VOLUME AND PRINTED CIRCUIT BOARD “F” 22
REPLACING THE DC MOTOR AND ADJUSTING THE MOTOR BELT TENSION 23
REPLACING THE FUSE 24
REPLACING THE MACHINE SOCKET 25
REPLACING THE TRANSFORMER 26
REPLACDING THE ZIGZAG MOTOR 27
REPLACING THE FEED MOTOR 28
ADJUSTING THE BUTTONHOLE LEVER 29
ADJUSTING THE BOBBIN WINDER SWITCH 30
OILING 31

WHAT TO DO WHEN

CONDITION	CAUSE	HOW TO FIX	REFERENCE
1. SKIPPING STITCHES	1. NEEDLE IS NOT INSERTED PROPERLY.	INSERT THE NEEDLE PROPERLY.	
	2. NEEDLE IS BENT OR WORN.	CHANGE THE NEEDLE.	
	3. INCORRECTLY THREADED.	RETHREAD.	
	4. NEEDLE OR THREAD ARE INAPPROPRIATE FOR FABRIC BEING SEWN.	USE THE RECOMMENDED SEWING NEEDLE AND THREAD.	
	5. SEWING ON STRETCH FABRIC.	USE A #11 BLUE TIP NEEDLE.	
	6. PRESSER FOOT PRESSURE IS TOO WEAK.	ADJUST THE PRESSER BAR LEVEL TO MAKE THE PRESSURE STRONGER.	
	7. INAPPROPRIATE NEEDLE BAR HEIGHT.	SEE MECHANICAL ADJUSTMENT “NEEDLE BAR HEIGHT”.	P. 11
	8. INAPPPROPRIATE NEEDLE TO SHUTTLE TIMING.	SEE MECHANICAL ADJUSTMENT “NEEDLE TO SHUTTLE TIMING”.	P. 12
	9. INAPPROPRIATE NEEDLE TO SHUTTLE CLEARANCE.	SEE MECHANICAL ADJUSTMENT “CLEARANCE BETWEEN NEEDLE AND HOOK”.	P. 13
2. FABRIC NOT MOVING	1. PRESSER FOOT PRESSURE IS TOO WEAK.	ADJUST THE PRESSER BAR LEVEL TO MAKE THE PRESSURE STRONGER.	
	2. INCORRECT F.D. HEIGHT.	SEE MECHANICAL ADJUSTMENT “FEED DOG HEIGHT”.	P. 15
	3.F.D. IS IN DOWN POSITION.	RAISE THE F.D. LEVEL.	
	4.THREAD ON BOTTOM SIDE OF FABRIC IS JAMMED UP.	MAKE SURE TO BRING BOTH NEEDLE AND BOBBIN THREAD UNDER THE FOOT WHEN STARTING SEWING.	
	5. FEED DOG TEETH ARE WORN.	CHANGE THE FEED DOG.	

CONDITION	CAUSE	HOW TO FIX	REFERENCE
3. BREAKING UPPER THREAD	1. INITIAL SEWING SPEED IS TOO FAST.	START WITH MEDIUM SPEED.	
	2. THREAD PATH IS INCORRECT.	USE THE PROPER THREAD PATH.	
	3. NEEDLE IS BENT OR DULL.	REPLACE WITH A NEW NEEDLE.	
	4. UPPER THREAD TENSION IS TOO STRONG.	ADJUST NEEDLE THREAD TENSION CORRECTLY.	P. 17
	5. NEEDLE SIZE IS INAPPROPRIATE FOR FABRIC.	USE APPROPRIATE NEEDLE FOR FABRIC AND THREAD IN USE.	
	6. NEEDLE EYE IS WORN.	CHANGE THE NEEDLE.	
	7. NEEDLE HOLE IN NEEDLE PLATE IS WORN OR BURRED.	REPAIR THE HOLE OR REPLACE THE NEEDLE PLATE.	
4. BREAKING BOBBIN THREAD	1. INCORRECITLY THREADED BOBBIN.	THREAD BOBBIN CORRECTLY.	
	2. TOO MUCH THREAD IS AROUND ON THE BOBBIN.	ADJUST THE POSITION OF STOPPER.	
	3. LINT IS STUCK INSIDE THE BOBBIN HOLDER.	CLEAN THE SHUTTLE.	
	4. THREAD QUALITY IS TOO LOW.	CHANGE TO A HIGH QUALITY SEWING THREAD.	
	5. THREAD IS JAMMING AROUND THE BOBBIN.	CLEAR OUT THE JAMMING THREAD.	
5. NEEDLE BREAKS	1. NEEDLE IS HITTING THE NEEDLE PLATE.	SEE MECHANICAL ADJUSTMENT “NEEDLE DROP POSITION”.	P. 10
	2. NEEDLE IS BENT OR WORN.	CHANGE THE NEEDLE.	
	3. NEEDLE IS HITTING THE SHUTTLE.	SEE MECHANICAL ADJUSTMENT “CLEARANCE BETWEEN NEEDLE AND HOOK”.	P. 13
	4. THE FABRIC MOVES WHILE THE NEEDLE IS PIERCING IT, OR THE NEEDLE ZIGZAGS WHILE IN FABRIC.	SEE MECHANICAL ADJUSTMENT “ZIGZAG SYNCHRONIZATION”.	P. 16
	5. FABIRIC IS BEING PULLED TOO STRONGLY WHILE SEWING.	GUIDE THE FABRIC GENTLY WHILE SEWING.	

CONDITION	CAUSE	HOW TO FIX	REFERENCE
6. NOISY OPERATION	1. BACKLASH BETWEEN SHTTLE HOOK GEAR AND LOWER SHAFT GEAR IS TOO GREAT.	SEE MECHANICAL ADJUSTMENT “BACKLASH (LOWER SHAFT GEAR)”.	P. 14
	2. LOWER SHAFT GEAR IS LOOSE.	ELIMINATE THE LOOSENESS.	
	3. INAPPROPRIATTE BELT TENSION.	SEE PART REMOVAL AND REPLACEMENT “DRIVING MOTOR (DC MOTOR)”.	P. 26
	4. NOT ENOUGH OIL.	OIL ALL MOVING PARTS.	P. 34
7. DEFORMATION PATTERN	1. INAPPROPRIATE FEED BALANCE.	SEE MECHANICAL ADJUSTMENT “STRETCH STITCH FEED BALANCE”.	P. 18
	2. INAPPROPRIATE ZIGZAG SYNCHRONIZATION.	SEE MECHANICAL ADJUSTMENT “ZIGZAG SYNCHRONIZATION”.	P. 16
	3. UPPER THREAD TENSION IS TOO STRONG.	SEE MECHANICAL ADJUSTMENT “NEEDLE THREAD TENSION”.	P. 17

SERVICE ACCESS (1)

FACE COVER

TO REMOVE:

1. REMOVE THE CAP (A).
2. REMOVE THE SETSCREW (B) AND REMOVE THE FACE COVER (C).

TO INSTALL:

3. INSERT THE HOOK (D) AND RIBS (E) OF THE FACE COVER INTO THE REAR COVER AND TIGHTEN THE SETSCREW, THEN ATTACH THE CAP.

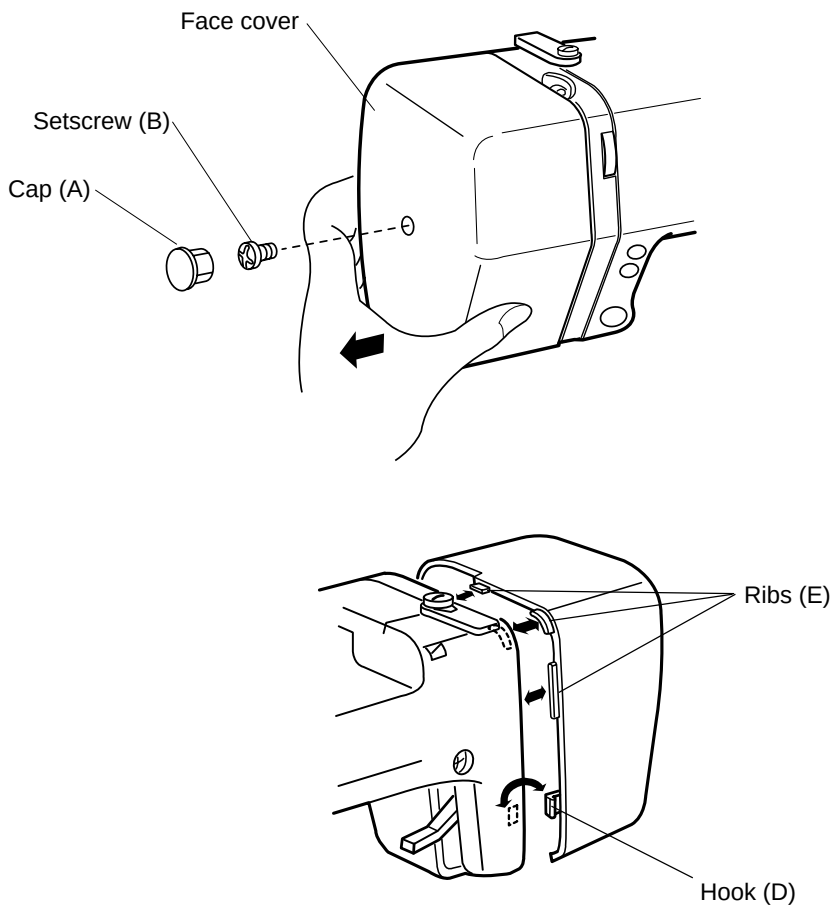

SERVICE ACCESS (2)

BED COVER

TO REMOVE:

1. SET THE DROP LEVER (A) TO THE LEFT AND REMOVE THE 3 SETSCREWS (B).
   REMOVE THE BED COVER (C).

TO INSTALL:

2. SET THE DROP LEVER (A) TO THE LEFT AND INSTALL THE BED COVER (C).
   SECURE IT IN PLACE WITH THE 3 SETSCREWS (B).

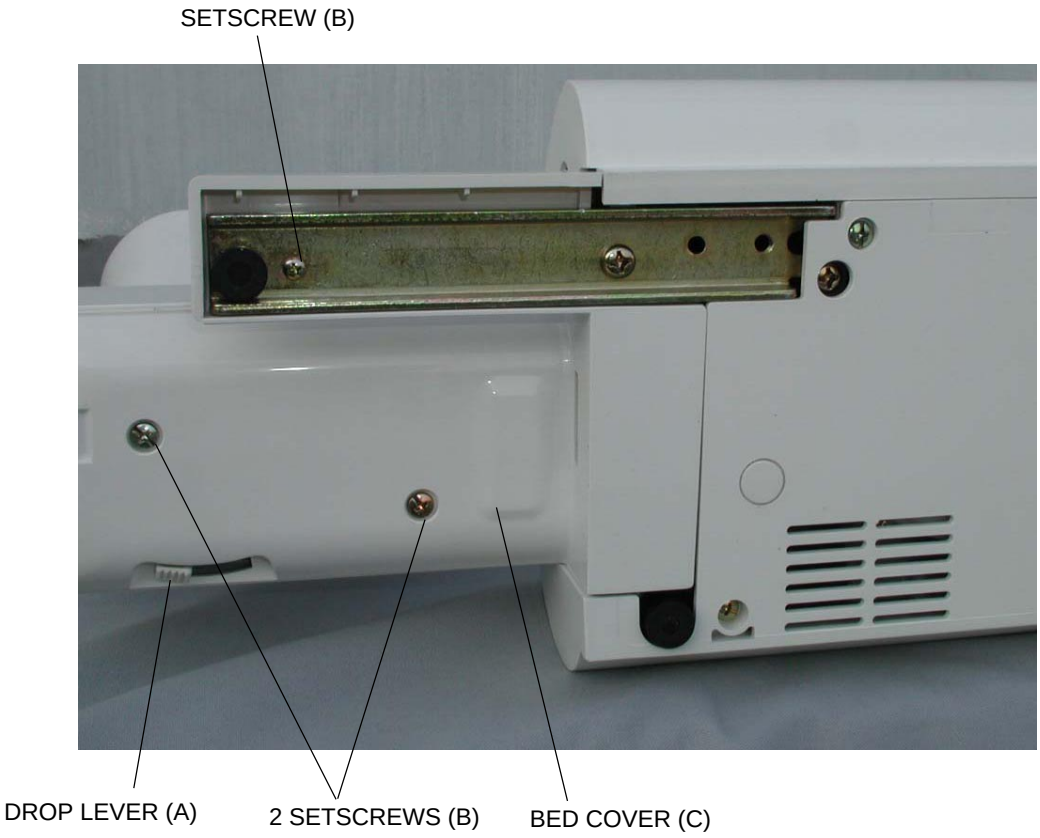

SERVICE ACCESS (3-1)

FRONT COVER

TO REMOVE:

1. REMOVE THE FACE COVER AND BED COVER (SEE PAGES 7 AND 8).
2. LOOSEN THE SETSCREWS (A), THEN REMOVE THE SETSCREWS (B), (C), (D), (E), (F), (G) AND (H).
3. REMOVE THE FRONT COVER (SEE PAGE 10) AND DISCONNECT EACH SWITCH CONNECTORS.

NOTES

TO DISCONNECT THE CONNECTORS:

1. GRASP THE CONNECTOR DIRECTLY WITH YOUR FINGERS AND PULL. DO NOT PULL ON THE LEAD WIRE, AS THIS MAY DAMAGE THE CONTACT SLEEVE INSIDE THE CONNECTOR.
2. WHEN DISCONNECTING THE MACHINE SOCKET AND POWER TRANSFORMER CONNECTORS, PULL THEM WHILE PUSHING THEM TOWARD THE PRINTED CIRCUIT BOARD A TO UNLOCK THEM.

TO INSTALL:

TO INSTALL THE FRONT COVER, FOLLOW THE ABOVE PROCEDURE IN REVERSE.

NOTES: TO CONNECT THE CONNECTORS:

1. BE SURE THAT THE COLOR OF EACH CONNECTOR CORRESPONDS TO THE COLOR OF THE CONNECTOR POST ON THE PRINTED CIRCUIT BOARD (PCB) TO WHICH IT IS CONNECTED.
2. INSERT THE CONNECTOR AT THE RIGHT ANGLE. THEN PUSH IT STRAIGHT DOWN UNTIL IT LOCKS IN PLACE.

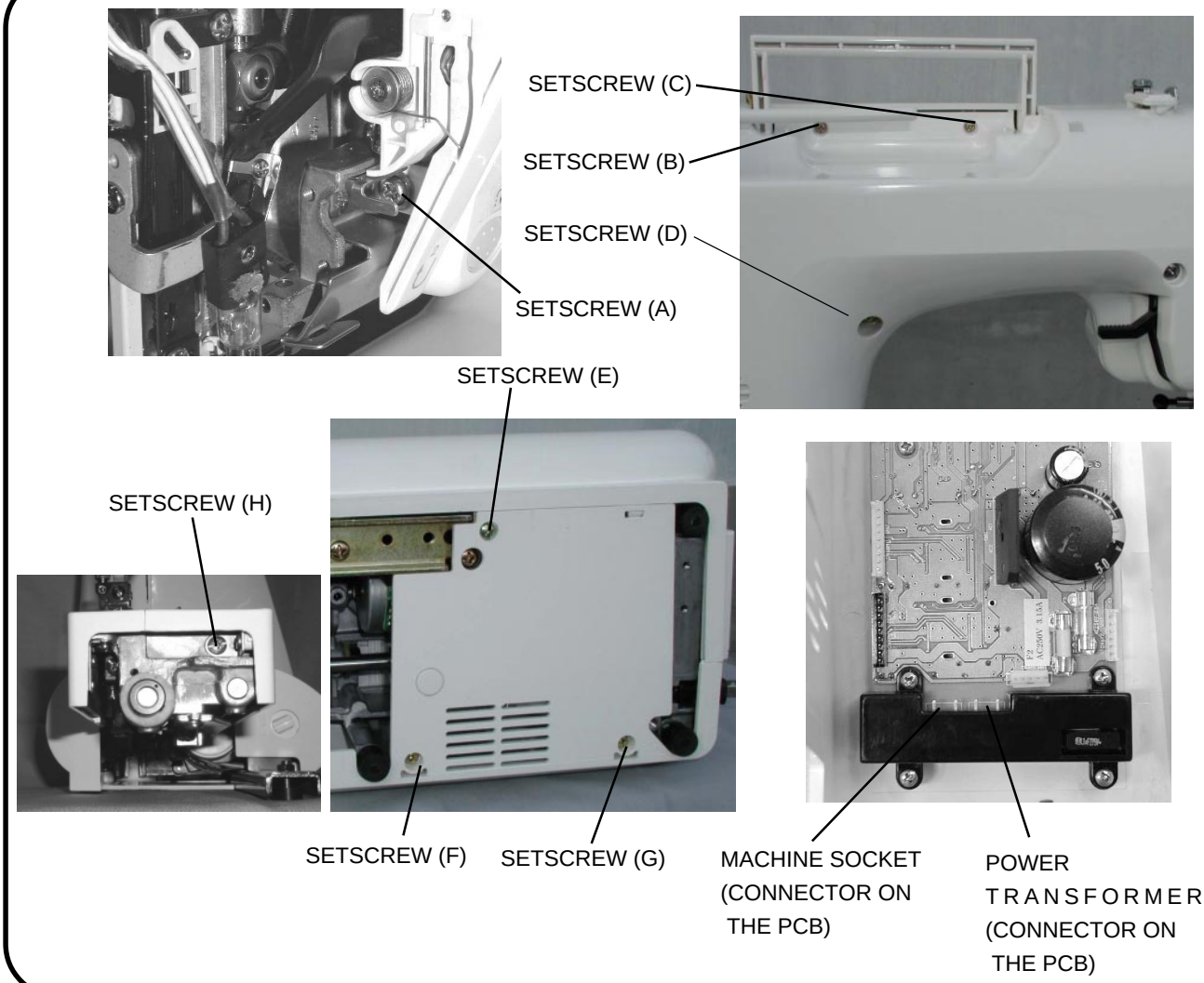

SERVICE ACCESS (3-2)

FRONT COVER

1. UNFASTEN THE FRONT AND REAR COVER HOOKS AND THE BOTTOM SIDE HOOK AS SHOWN.
2. PULL THE FRONT COVER TO CLEAR OF THE FEED BALANCING KNOB.
3. PULL THE FRONT COVER TO CLEAR OF THE MACHINE SOCKET AND REMOVE THE FRONT COVER.

* REMOVE THE SETSCREWS (F) AND (G) ON THE REAR COVER TO FACILITATE CLEARANCE OF THE FRONT COVER FROM THE MACHINE SOCKET.

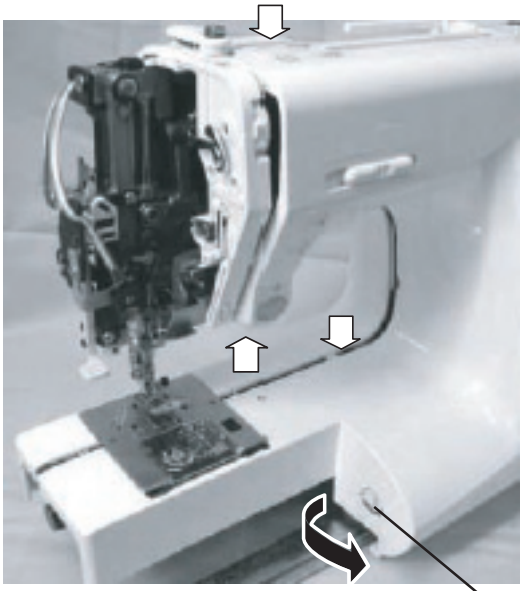

FEED BALANCE DIAL KNOB

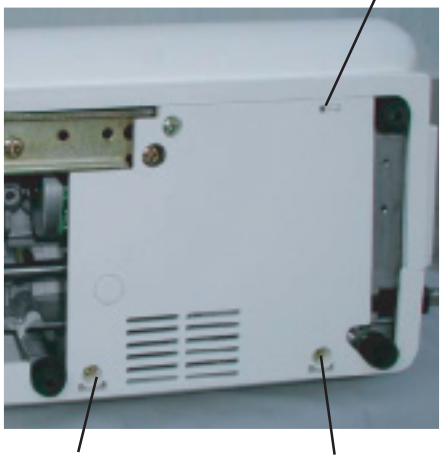

SERVICE ACCESS (4)

REAR COVER

TO REMOVE:

1. REMOVE THE FRONT COVER (SEE PAGE 6 AND 7).
2. REMOVE SETSCREWS (A), (B) AND (C), THEN REMOVE THE REAR COVER.
   * TO REMOVE THE COVER, DETACH THE PRESSER FOOT LIFTER SECTION FIRST, WITH THE PRESSER FOOT LIFTER IN THE DOWN POSITION.

TO INSTALL:

3. FOLLOW THE ABOVE PROCEDURE IN REVERSE.

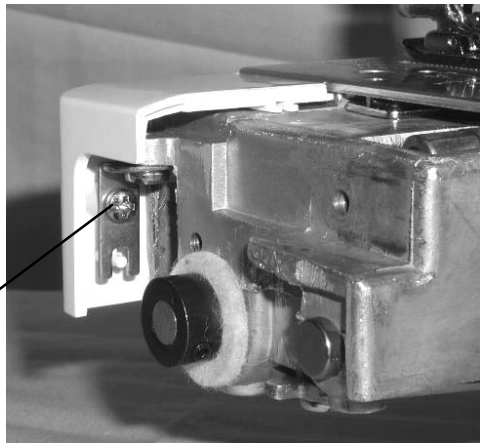

MECHANICAL ADJUSTMENT

PRESSER BAR HEIGHT AND ALIGNMENT

WHEN THE PRESSER FOOT IS RAISED, THE CLEARANCE BETWEEN THE PRESSER FOOT AND THE NEEDLE PLATE SHOULD BE 6.0 MM.
WHEN THE PRESSER FOOT IS LOWERED, THE EDGE OF THE FOOT AND THE FEED DOG WINDOW ON THE NEEDLE PLATE SHOULD BE PARALLEL.

1. REMOVE THE FACE COVER AND RAISE THE PRESSER FOOT.
   LOOSEN THE SETSCREW TO ADJUST THE PRESSER FOOT HEIGHT (6.0 MM) AND THE PRESSER FOOT ALIGNMENT.
2. TIGHTEN THE SETSCREW FIRMLY.
3. INSTALL THE FACE COVER.

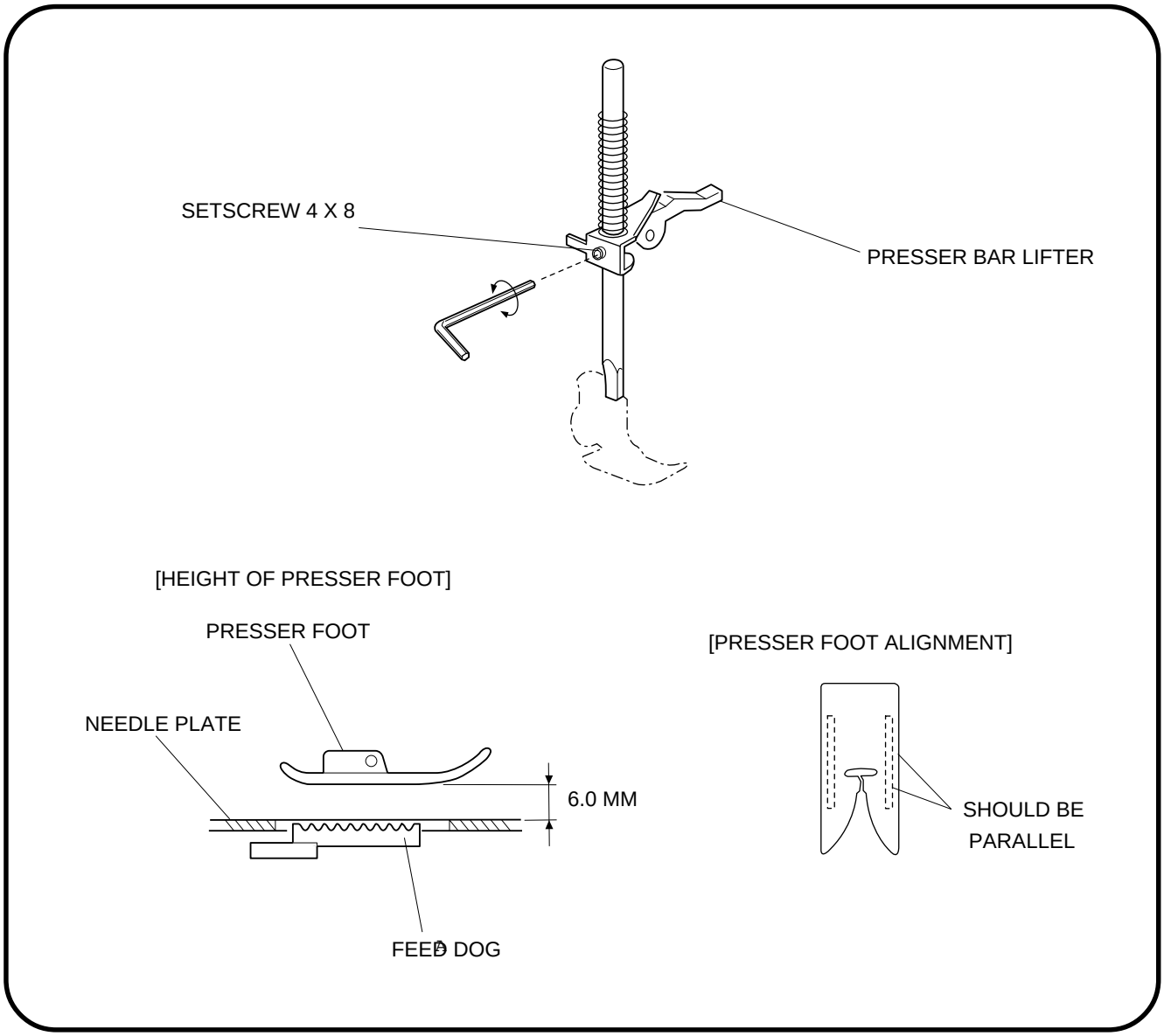

MECHANICAL ADJUSTMENT

NEEDLE DROP POSITION

SET THE STITCH PATTERN AT " "; THE STANDARD NEEDLE DROP POSITION SHOULD BE AT THE CENTER OF THE NEEDLE PLATE HOLE.
WHEN THE NEEDLE SWINGS IN MAXIMUM ZIGZAG WIDTH " ", THE DISTANCE BETWEEN BOTH ENDS OF THE NEEDLE HOLE ON THE NEEDLE PLATE AND THE NEEDLE SHOULD BE 0.2 MM OR MORE. IF NOT, ADJUST AS FOLLOWS.

ADJUSTMENT PROCEDURE

1. TURN ON THE POWER SWITCH, SET THE STITCH PATTERN AT STRAIGHT " " AND THE ZIGZAG WIDTH AT MAXIMUM " " THEN CHECK THE NEEDLE DROP POSITION.
2. IF THE NEEDLE DROP POSITION IS NOT IN THE CENTER OF THE NEEDLE PLATE HOLE WHEN THE STRAIGHT STITCH IS SELECTED, OR IF THE CLEARANCE BETWEEN THE NEEDLE AND EDGE OF THE NEEDLE PLATE HOLE ON BOTH SIDE IS LESS THAN 0.2 MM WHEN THE STITCH PATTERN IS SET TO MAXIMUM ZIGZAG WIDTH, REMOVE THE FACE COVER AND LOOSEN THE SETSCREW, THEN ADJUST THE NEEDLE DROP POSITION BY TURNING THE ECCENTRIC PIN.

NOTE

MAKE SURE THE ECCENTRIC PIN IS POSITIONED WITH ITS OFF-CENTER HEAD FACING DOWNWARD.

3. WHEN YOU HAVE FINISHED ADJUSTING THE NEEDLE DROP POSITION, TIGHTEN THE SETSCREW AND INSTALL THE FACE COVER.

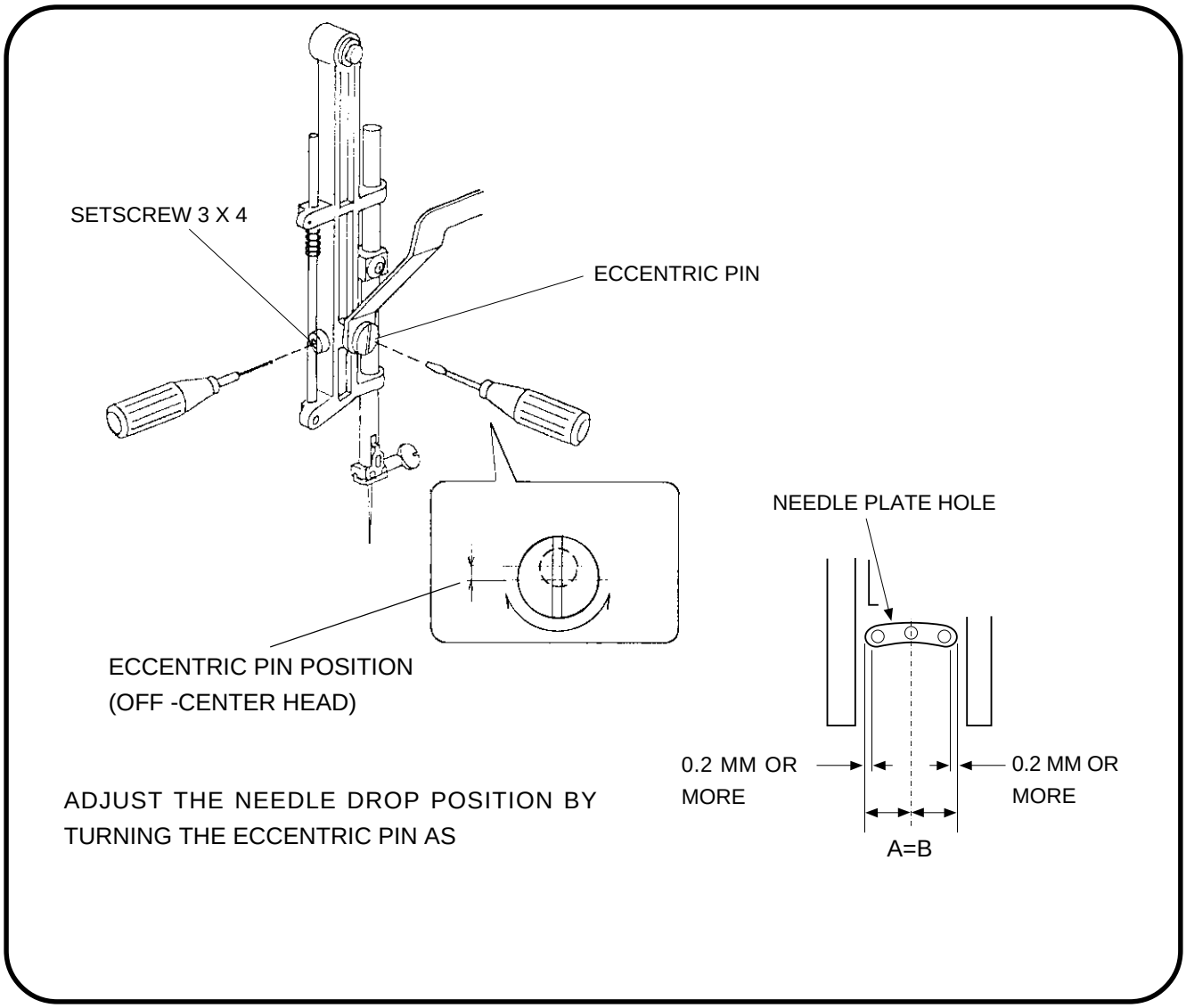

MECHANICAL ADJUSTMENT

NEEDLE BAR HEIGHT

THE DISTANCE BETWEEN THE UPPER EDGE OF NEEDLE EYE AND THE TIP OF THE HOOK SHOULD BE IN THE RANGE OF 1.6-2.0 MM WHEN THE TIP OF HOOK MEETS THE RIGHT SIDE OF THE NEEDLE IN ASCENDING TRAVEL OF NEEDLE FROM ITS LEFT AND LOWEST POOSITION.

1. REMOVE THE NEEDLE PLATE AND BOBBIN HOLDER.
   TURN ON THE POWER SWITCH.
3. SELECT THE PATTERN (SIMPLE ZIGZAG). (MAXIMUM ZIGZAG WIDTH)
4. TURN THE HANDWHEEL TOWARD YOU UNTIL THE TIP OF HOOK MEETS THE RIGHT SIDE OF THE NEEDLE.
5. LOOSEN THE SETSCREW (A).
6. ADJUST THE HEIGHT OF THE NEEDLE BAR BY MOVING THE NEEDLE BAR UPWARD OR DOWNWARD WITHOUT TURNING IT. (MAKE SURE THAT THE NEEDLE SETTING GROOVE OF THE NEEDLE BAR IS IN THE FRONT).
7. TIGHTEN THE SETSCREW (A).
8. INSERT THE BOBBIN HOLDER, THEN ATTACH THE NEEDLE PLATE.

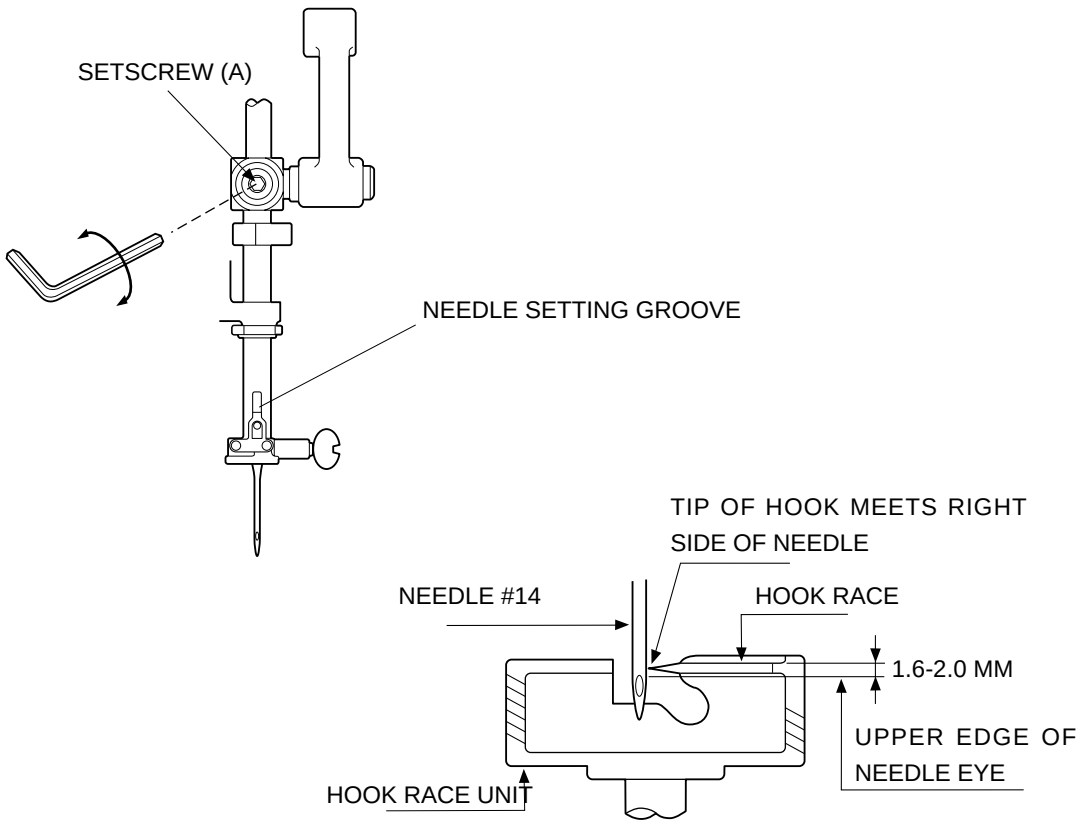

MECHANICAL ADJUSTMENT

NEEDLE TO HOOK TIMING

WHEN THE MACHINE IS SET THE STRAIGHT STITCH PATTERN NO.2 (LEFT NEEDLE POSITION), THE AMOUNT OF ASCENDING TRAVEL OF THE NEEDLE BAR FROM ITS LOWEST POSITION TO THE POSITION WHERE THE TIP OF THE HOOK MEETS THE RIGHT SIDE OF THE NEEDLE SHOULD BE 3.25 - 3.55 MM.

1.REMOVE THE NEEDLE PLATE AND BOBBIN HOLDER.
2.TURN ON THE POWER SWITCH, SET THESTRAIGHT STITCH PATTERN NO.2 (LEFT NEEDLE POSITION).
3.REMOVE THE BED COVER.
4.TURN THE HANDWHEEL TOWARD YOU, AND SET THE NEEDLE BAR AT THE LOWEST POSITION.
5.LOOSEN THE SETSCREWS ON THE LOWER SHAFT TIMING GEAR.
6.RAISE THE NEEDLE BAR BETWEEN 3.25 - 3.55 MM FROM THE LOWEST POSITION OF THE NEEDLE BAR.
7.TURN THE LOWER SHAFT TIMING GEAR UNTIL THE TIP OF HOOK MEETS WITH THE RIGHT SIDE OF NEEDLE.
8.TIGHTEN THE SETSCREWS ON THE LOWER SHAFT TIMING GEAR.
9.ATTACH THE BED COVER, BOBBIN HOLDER AND NEEDLE PLATE.

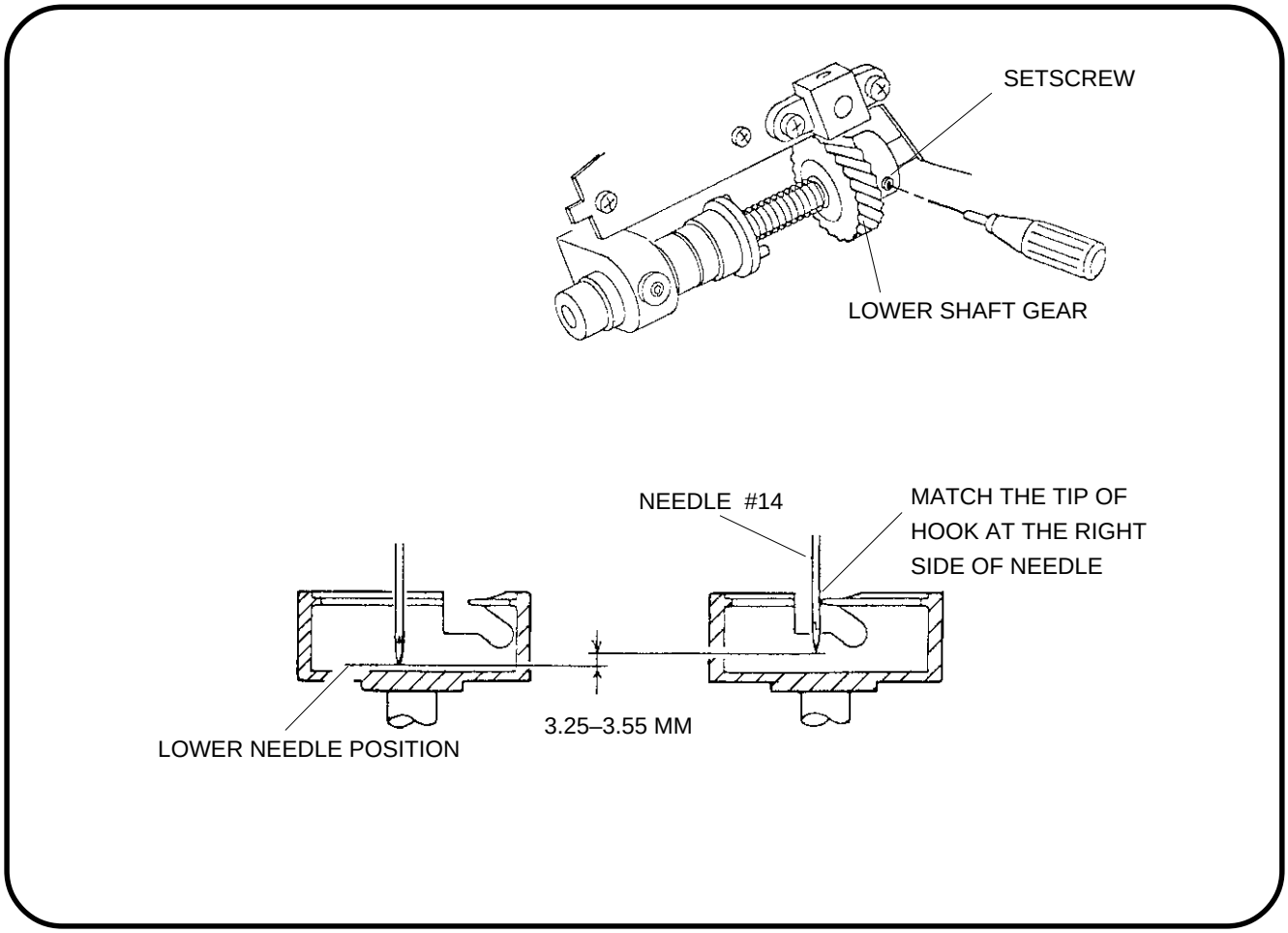

MECHANICAL ADJUSTMENT

NEEDLE CLEARANCE TO SHUTTLE

THE CLEARANCE BETWEEN THE NEEDLE AND THE TIP OF HOOK SHOULD BE -0.1 TO +0.05 MM.

PREPARATION:

1. REMOVE THE NEEDLE PLATE, BOBBIN HOLDER, AND BED COVER, AND REPLACE THE NEEDLE WITH THE TEST PIN (D).
2. TURN THE POWER SWITCH ON, AND SELECT PATTERN " " (SIMPLOE ZIGZAG). (MAXIMUM ZIGZAG WIDTH)

ADJUSTMENT PROCEDURE:

1. LOOSEN THE SCREWS (A), (B), (C), THEN SLIGHTLY TIGHTEN THE HING SCREW(C).
2. TURN THE HANDWHEEL TOWARD YOU, AND ADJUST THE CLEARANCE BETWEEN MASTER NEEDLE AND THE POINT OF THE HOOK IN THE LEFT AND RIGHT NEEDLE POSITION TO –0.1 TO +0.05 MM BY MOVING THE HOOK IN THE LEFT AND RIGHT BY MOVING THE HOOK SET PLATE UP OR DOWN.
3. TIGHTEN THE SETSCREWS (A), (B), (C).
4. CHECK THE BACKLASH OF THE HOOK DRIVE, GEAR AND LOWER SHAFT GEAR. IF THE BACKLASH IS TOO GREAT OR NOT ENOUGH, ADJUST THE BACKLASH IN ACCORDANCE WITH "TO ADJUST THE BACKLASH OF HOOK DRIVE GEAR AND LOWER SHAFT GEAR".
5. ATTACH THE BED COVER, NEEDLE PLATE AND BOBBIN HOLDER, AND REMOVE THE MASTER NEEDLE.

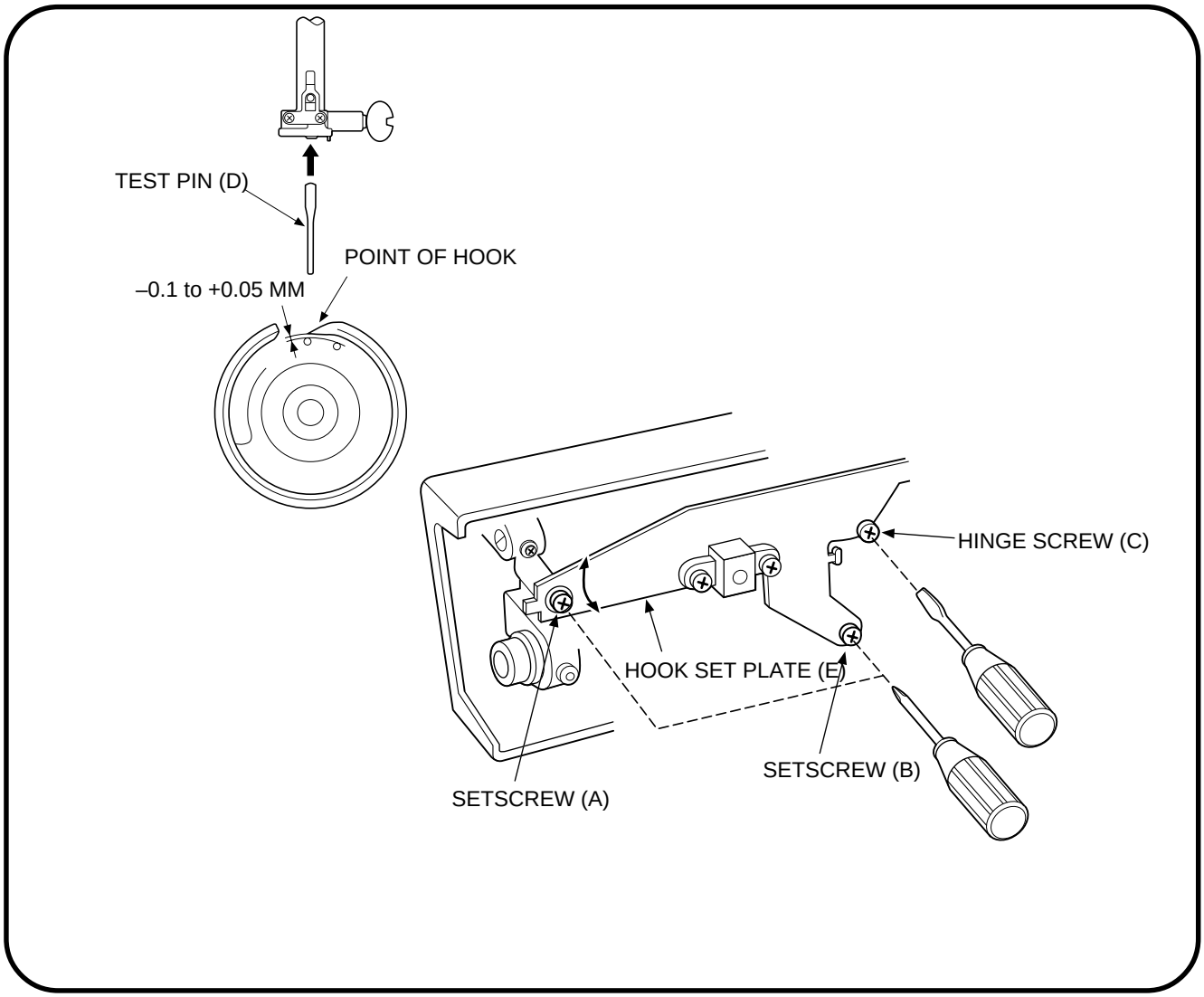

MECHANICAL ADJUSTMENT

BACKLASH (BETWEEN LOWER SHAFT GEAR AND SHUTTLE HOOK GEAR)

JOG THE HOOK RACE BACK AND FORTH TO CHECK ROTARY PLAY.
THE STANDARD PLAY SHOULD BE 0.8 MM (0.03") OR LESS WHEN THE HOOK POINT IS WITHIN THE FEED DOG WODTH. IF PLAY EXCESS 0.8 MM, ADJUST AS FOLLOWS.

ADJUSTMENT:

1. REMOVE THE BED COVER (SEE PAGE 5).
2. LOOSEN THE SETSCREW.
3. TURN THE LOWER SHAFT BUSHING (ECCENTRIC BUSHING) CLOCKWISE (B) IF THERE IS TOO MUCH PLAY IN THE SHUTTLE HOOK.
   TURN THE LOWER SHAFT BUSHING (ECCENTRIC BUSHING) COUNTERCLOCKWISE (A) IF THERE IS TOO LITTLE PLAY IN THE SHUTTLE HOOK.
4. TIGHTEN THE SETSCREW SECURELY AFTER ADJUSTMENT AND INSTALL THE BED COVER.

NOTE

AFTER ADJUSTING THE BACKLASH, BE SURE TO CHECK THE NEEDLE TO SHUTTLE TIMING AND THE FEED DOG HEIGHT.

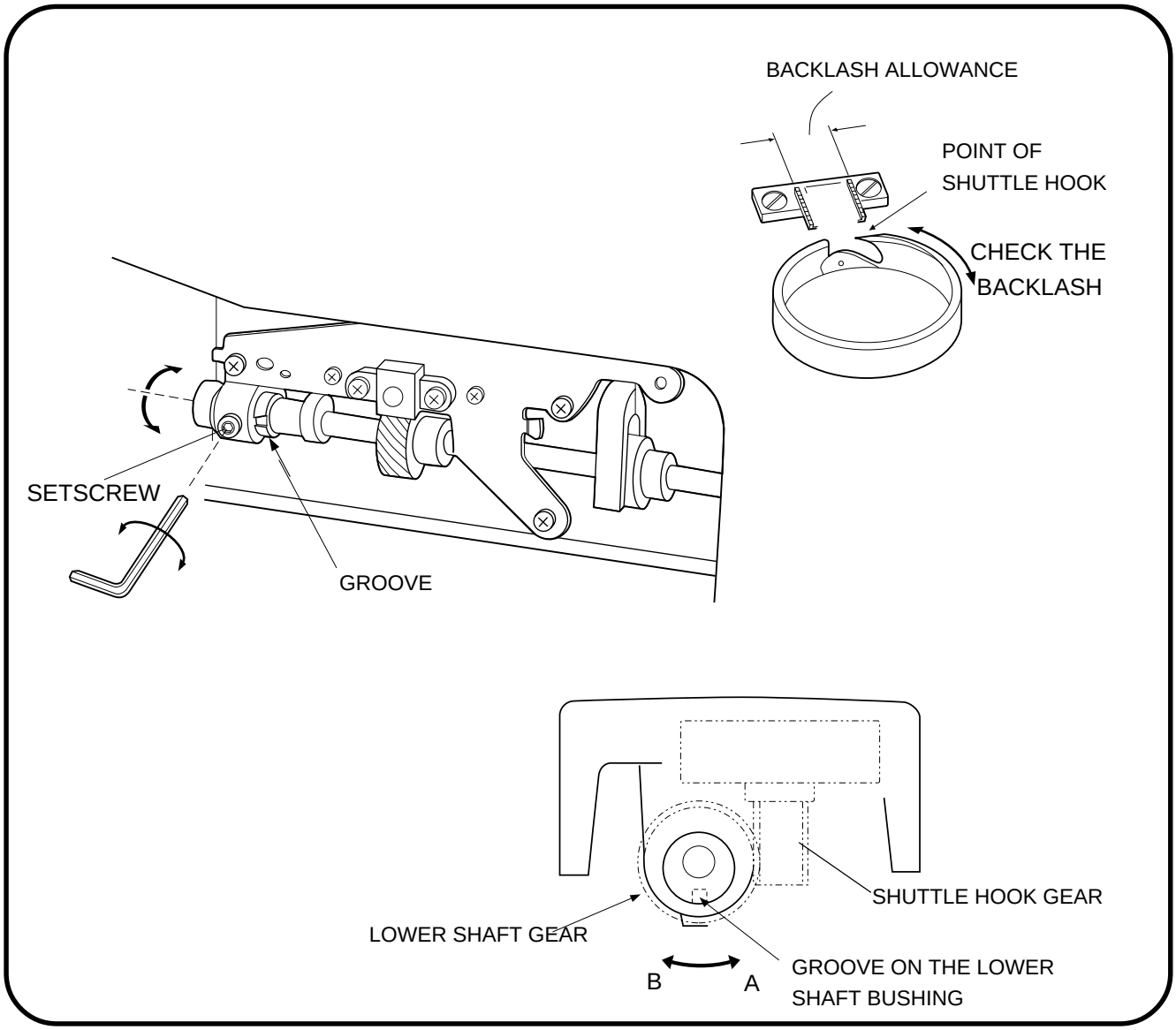

MECHANICAL ADJUSTMENT

THE HIGHEST POSITION OF THE FEED DOG SHOULD BE BETWEEN 0.8 TO 0.9 MM FROM THE SURFACE OF THE NEEDLE PLATE WHEN THE PRESSURE DIAL IS SET AT "3" AND THE PRESSER FOOT IS RAISED.

1. SET THE PRESSURE DIAL AT "3" AND LOWER THE PRESSER FOOT.
2. TURN ON THE POWER SWITCH.
3. REMOVE THE BED COVER.
4. TURN THE HANDWHEEL TOWARD YOU TO SET THE FEED DOG AT THE HIGHEST POSITION.
5. LOOSEN THE SETSCREW(A) AND NUT(B).
6. ADJUST THE FEED DOG HEIGHT BY TURNING THE ADJUSTING SCREW (C).
7. TIGHTEN THE NUT (B) AND SETSCREW (A).

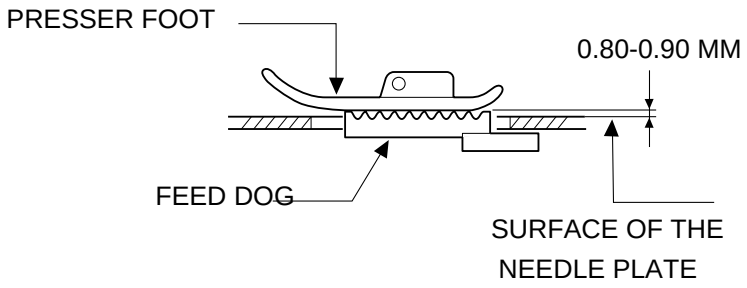

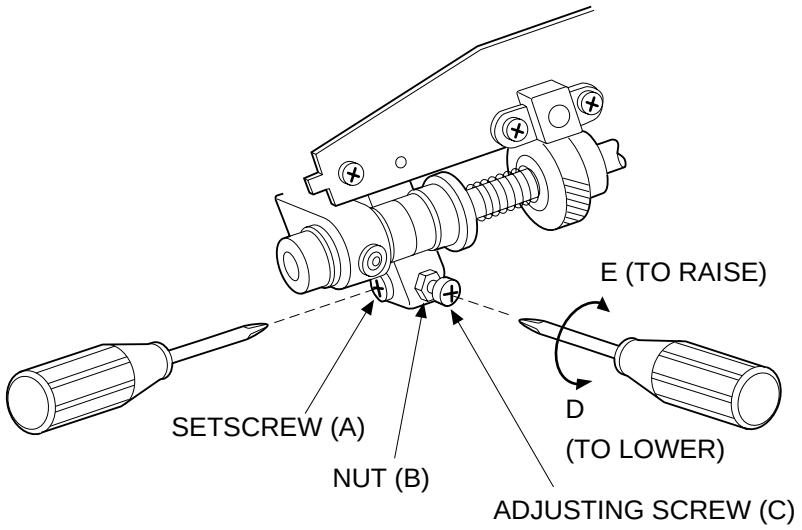

MECHANICAL ADJUSTMENT

ZIGZAG SYNCHRONIZATION

THE NEEDLE SHOULD START SWING BETWEEN 6.3 TO 7.5 MM ABOVE THE SURFACE OF THE NEEDLE PLATE WHEN THE MACHINE IS SET FOR ZIGZAG STITCHING.

1. REMOVE THE FRONT COVER (REFER TO PAGE 6-7).
2. TURN ON THE POWER SWITCH, SELECT THE PATTERN NO. 2 AND SET THE MACHINE AT THE MAXIMUM ZIGZAG WIDTH.
3. TURN THE HANDWHEEL TOWARD YOU SLOWLY WITH YOUR HAND UNTIL THE NEEDLE START TO SEWING. LOOSEN THE SETSCREW AND TURN THE UPPER SHAFT SHIELD PLATE IN THE DIRECTION OF;

* A. IF THE SWING POINT IS HIGHER THAN 7.5 MM.

* B . IF THE SWING POINT IS LOWER THAN 6.3 MM.

4. POSITION THE UPPER SHAFT SHIELD PLATE AS CLOSE AS POSSIBLE TO THE LEFT. (IT SHOULD NOT TOUCH THE UPPER SHAFT SENSOR).
5. CHECK THE SWING POINT BY TURNING THE HANDWHEEL, THEN TIGHTEN THE SETSCREW.
6. ATTACH THE FRONT COVER.

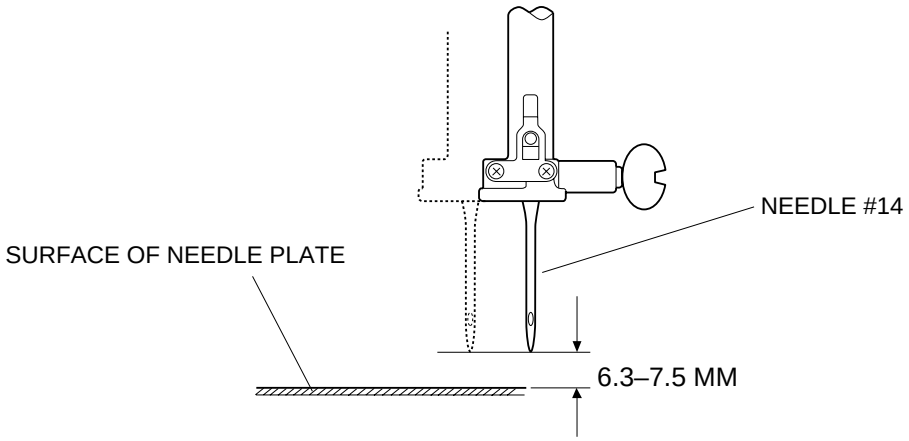

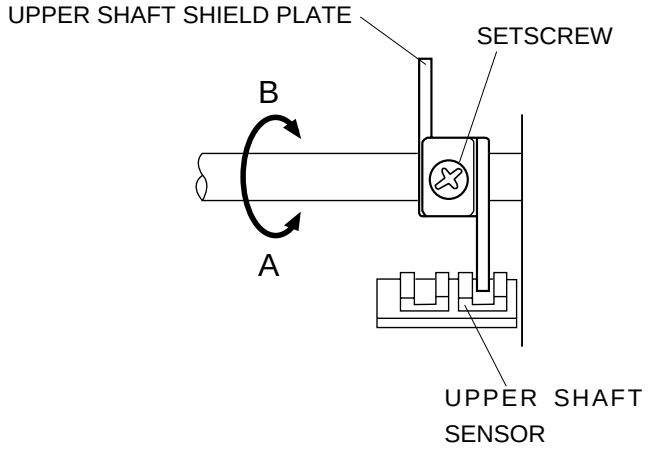

MECHANICAL ADJUSTMENT

NEEDLE THREAD TENSION

THE STANDARD TENSION SHOULD BE 75 TO 90 GRAMS WHEN THE TENSION DIAL IS SET AT "A" (AUTO), MEASURED WITH A #50 WHITE POLYESTER THREAD BEING PULLED AT APROXIMATELY 110 MM/SEC. IF THE TENSION IS OUTSIDE THE STANDARD RANGE, ADJUST AS FOLLOWS:

ADJUSTMENT:

1. SET THE THREAD TENSION DIAL TO "A" AND CHECK THE THREAD TENSION.
2. REMOVE THE FACE COVER (SEE PAGE 4).
3. IF THE TENSION IS OUTSIDE THE STANDARD RANGE, TURN THE DIAL TO FIND A POSITION WHERE THE CORRECT TENSION IS OBTAINED.
4. INSERT A SCREWDRIVER INTO THE SLIT ON THE SHAFT AND PUSH IT UNTIL THE TENSION DIAL IS DISENGAGED FROM THE SHAFT.
5. WHILE HOLDING THE SHAFT IN PLACE WITH THE SCREWDRIVER, TURN THE DIAL BACK TO POSITION "A" AND ENGAGE IT WITH THE SHAFT.
6. REMOVE THE SCREWDRIVER.
7. CHECK THE THREAD TENSION TO CONFIRM THAT IT IS CORRECT, THEN INSTALL THE FACE COVER.

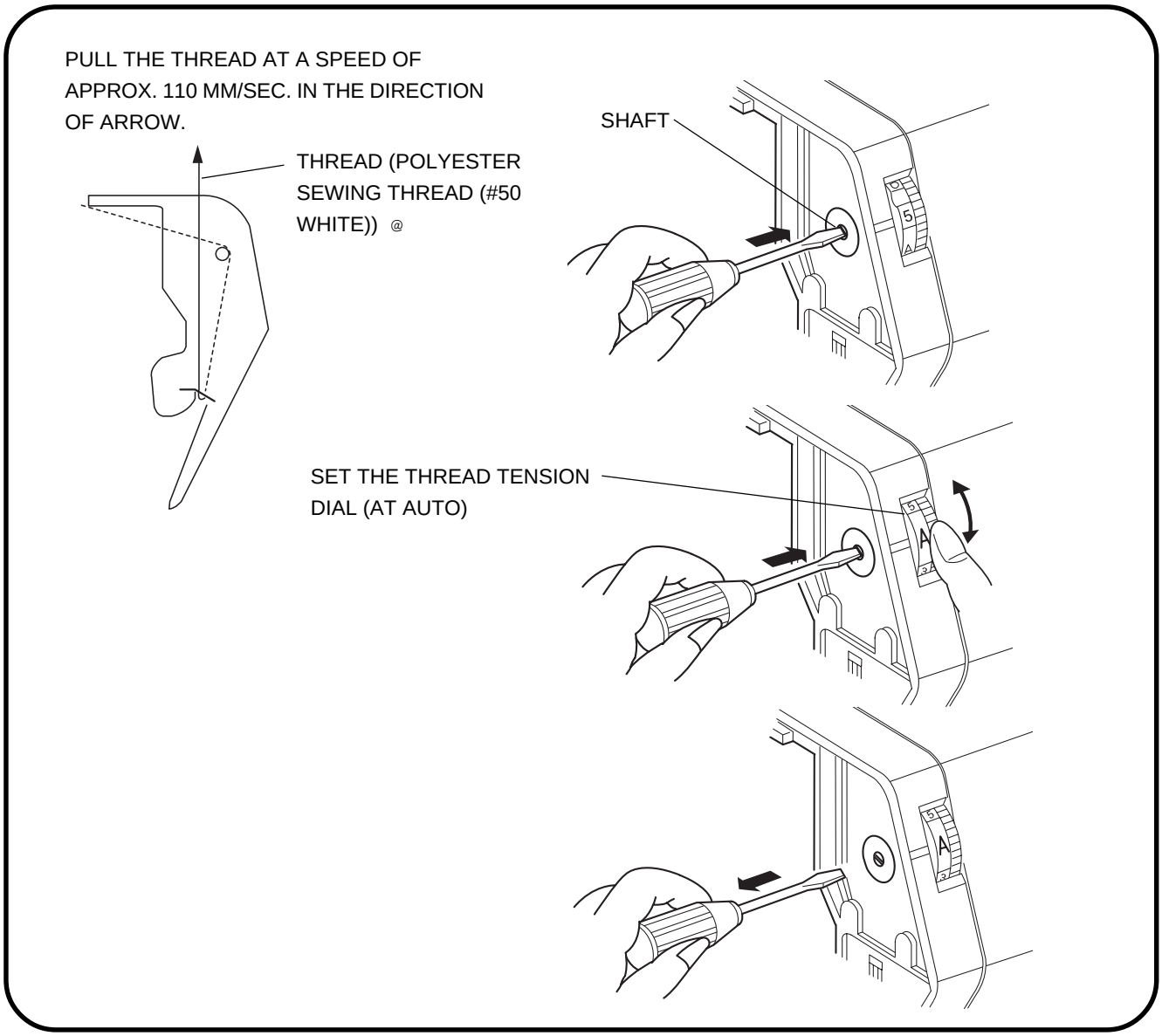

MECHANICAL ADJUSTMENT

STRETCH STITCH FEED BALANCE

WHEN A STRETCH STITCH PATTERN IS SEWN WITH THE FEED BALANCING DIAL POSITION SET AT THE STANDARD SETTING MARK " ", THE STITCH PATTERN SHOULD LOOK LIKE THE ONE MARKED WITH A " ○ " (A=B) IN THE DIAGRAM BELOW.
IF FORWARD AND BACKWARD FEEDING IS UNBALANCED (A.B OR A,B), ADJUST AS FOLLOWS.

ADJUSTMENT PROCEDURE:

1. TURN THE POWER SWITCH ON AND SELECT THE STITCH PATTERN " ".
2. SET THE SLIT OF THE FEED BALANCING DIAL TO THE STANDARD SETTING MARK " " ON THE FRONT COVER.
3. PUT A PIECE OF PAPER UNDER THE PRESSER FOOT AND LOWER IT.
   TURNING THE HANDWHEEL TOWARD YOU, AND CHECK THE NEEDLE MARK AT "A" AND "B".
4. REMOVE THE CAP.
5. IF A>B, TURN THE ADJUSTING SCREW COUNTERCLOCKWISE "C".
6. WHEN A<B, TURN THE ADJUSTING SCREW CLOCKWISE "D".
7. ATTACH THE CAP.

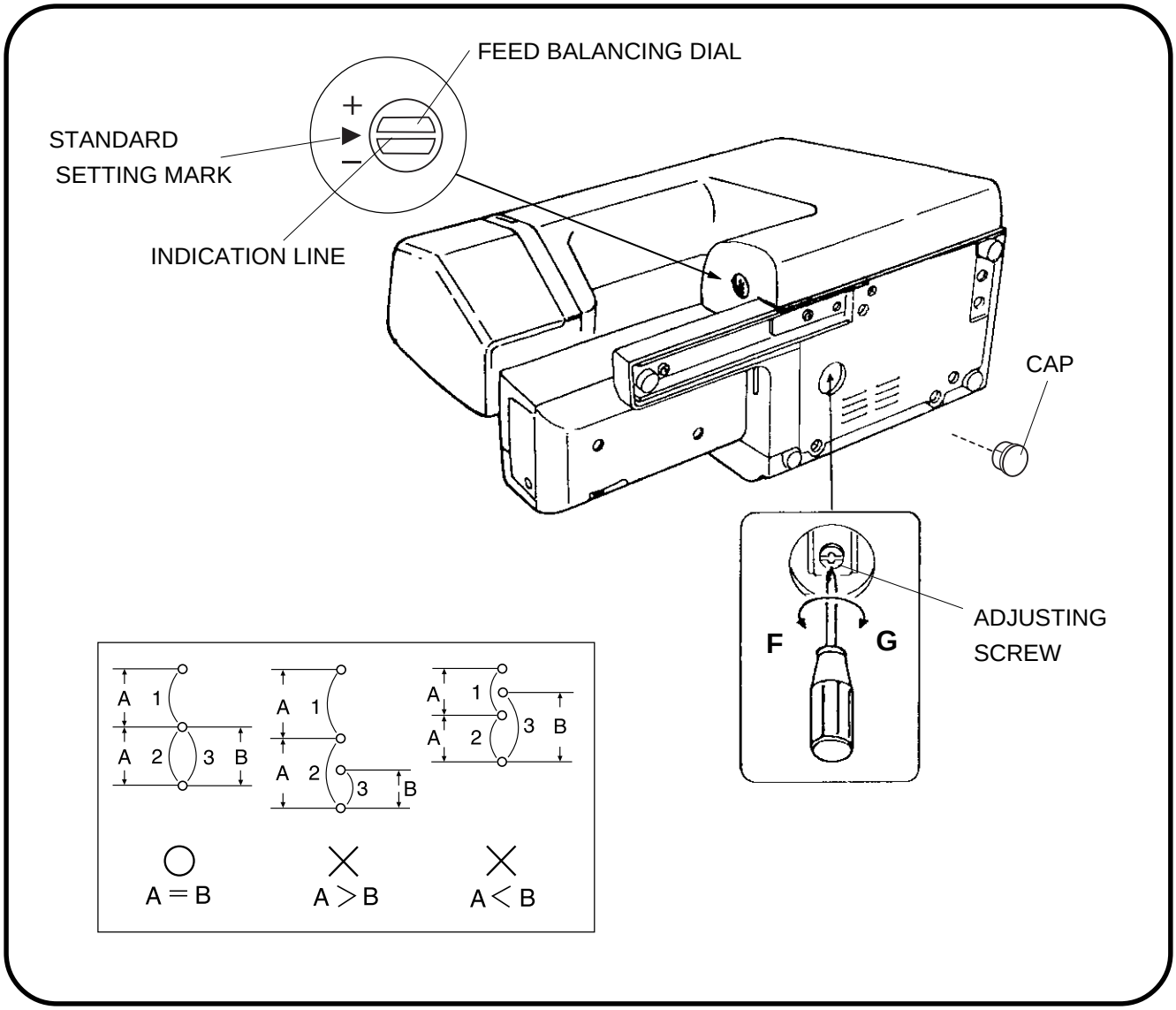

MECHANICAL ADJUSTMENT

REPLACEMENT AND ADJUSTMENT OF THE NEEDLE THREADER PLATE

IF THE HOOK OF THE THREADER PLATE IS DAMAGED, CHANGE OR ADJUST THE PART AS FOLLOWS:

TO CHANGE THE THREADER PLATE:

TO REMOVE:

1. PUSH DOWN THE NEEDLE THREADER KNOB AND PULL THE NEEDLE THREADER PLATE (A) DOWN TO REMOVE IT (SEE FIG 1).
2. TO INSTALL THE NEEDLE THREADER PLATE, LINE THE GROOVE UP WITH THE PIN (B) AND PUSH IT UP TO SNAP FIT.

TO ADJUST THE THREADER PLATE POSITION:

1. IF THE HOOK ON THE THREADER PLATE TOUCHES THE LEFT OR RIGHT SIDE OF THE NEEDLE GUIDE, LOOSEN SETSCREW (C) AND ADJUST THE HOOK POSITION (FIG 2).
2. IF THE HOOK ON THE THREADER PLATE TOUCHES THE TOP OR BOTTOM SIDE OF THE NEEDLE GUIDE, LOOSEN SETSCREW (D) AND ADJUST THE HOOK POSITION (FIG.3)

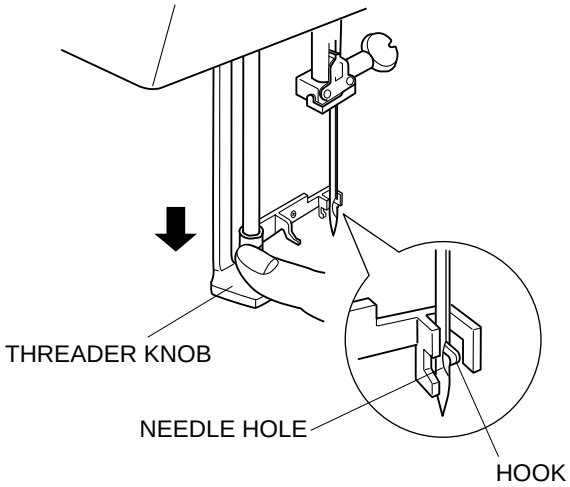

REPLACING THE NEEDLE THREADER COVER (WITH THE THREADER PLATE ATTACHED

FIG. 1

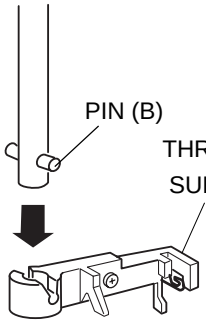

VERTICAL ADJUSTMENT FIG. 3

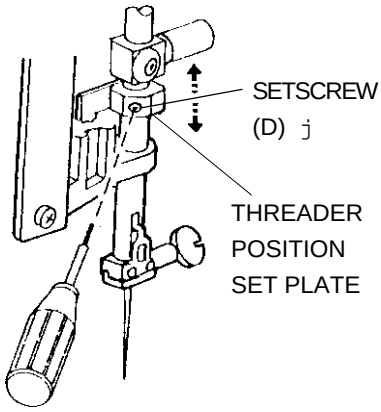

ADJUSTMENT OF LEFT OR RIGHT DIRECTION

FIG. 2

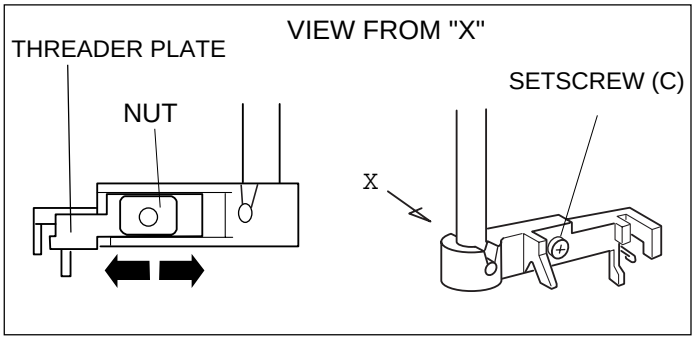

CONNECTOR DIAGRAM

REFER TO THE DIAGRAM FOR LOCATING THE CONNECTOR POSTS TO WHICH EACH CONNECTORS SHOULD BE CONNECTED.

NOTE

TO DISCONNECT THE CONNECTORS:

1. GRASP THE CONNECTOR DIRECTLY WITH YOUR FINGERS AND PULL.
   DO NOT PULL THE LEAD WIRE, AS THIS MAY DAMAGE THE CONTACT SLEEVE INSIDE THE CONNECTOR.
2. WHEN DISCONNECTING THE MACHINE SOCKET AND POWER TRANSFORMER CONNECTORS, PULL THEM WHILE PUSHING THEM TOWARD THE PRINTED CIRCUIT BOARD TO UNLOCK THEM.

NOTE

TO CONNECT THE CONNECTORS:

1. BE SURE THAT THE COLOR OF EACH CONNECTOR CORRESPONDS TO THE COLOR OF THE CONNECTOR POST ON THE PRINTED CIRCUIT BOARD (PCB) TO WHICH IT IS CONNECTED.
2. POSITION THE CONNECTOR CORRECTLY, THEN PUSH IT STRAIGHT DOWN UNTIL IT LOCKS IN PLACE.

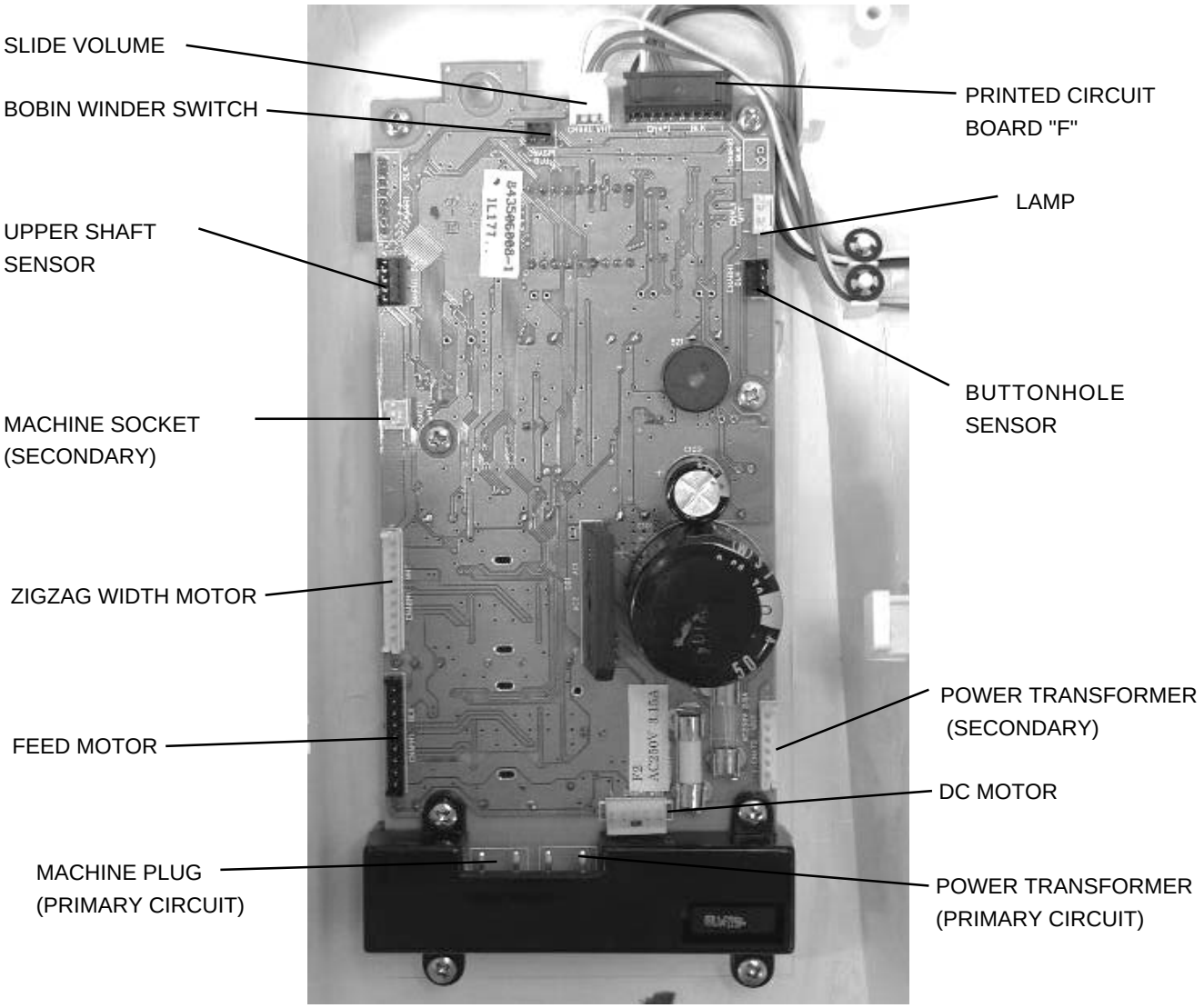

REPLACING PRINTED CIRCUIT BOARD A

TO REMOVE:

1. REMOVE THE FRONT COVER (SEE PAGE 9 ~ 10).
2. UNPLUG THE CONNECTORS FROM THE BOARD "A".
3. REMOVE THE 6 SCREWS AND REMOVE BOARD "A".

NOTE: TO DISCONNECT THE CONNECTORS:

1. GRASP THE CONNECTOR DIRECTLY WITH YOUR FINGERS AND PULL. DO NOT PULL ON THE LEAD WIRE, AS THIS MAY DAMAGE THE CONTACT SLEEVE INSIDE THECONNECTOR.
2. WHEN DISCONNECTING THE MACHINE SOCKET AND POWER TRANSFORMER CONNECTORS, PULL THEM WHILE PUSHING THEM TOWARD THE A BOARD TO UNLOCK THEM.

TO INSTALL:

4. TO INSTALL, FOLLOW THE ABOVE PROCEDURE IN REVERSE.

NOTE

WHEN INSTALLING BOARD "A" IN THE MACHINE.
THE TRANSFORMER WIRE SHOULD NOT PASS OVER THE CAPACITOR WHEN BOARD "A" IS INSTALLED.
IF THE CORD IS RESTING ON THE CAPACITOR, IT MAY INTERFERE THE PATTERN SELECTOR BUTTON AFTER THE FRONT COVER IS INSTALLED.

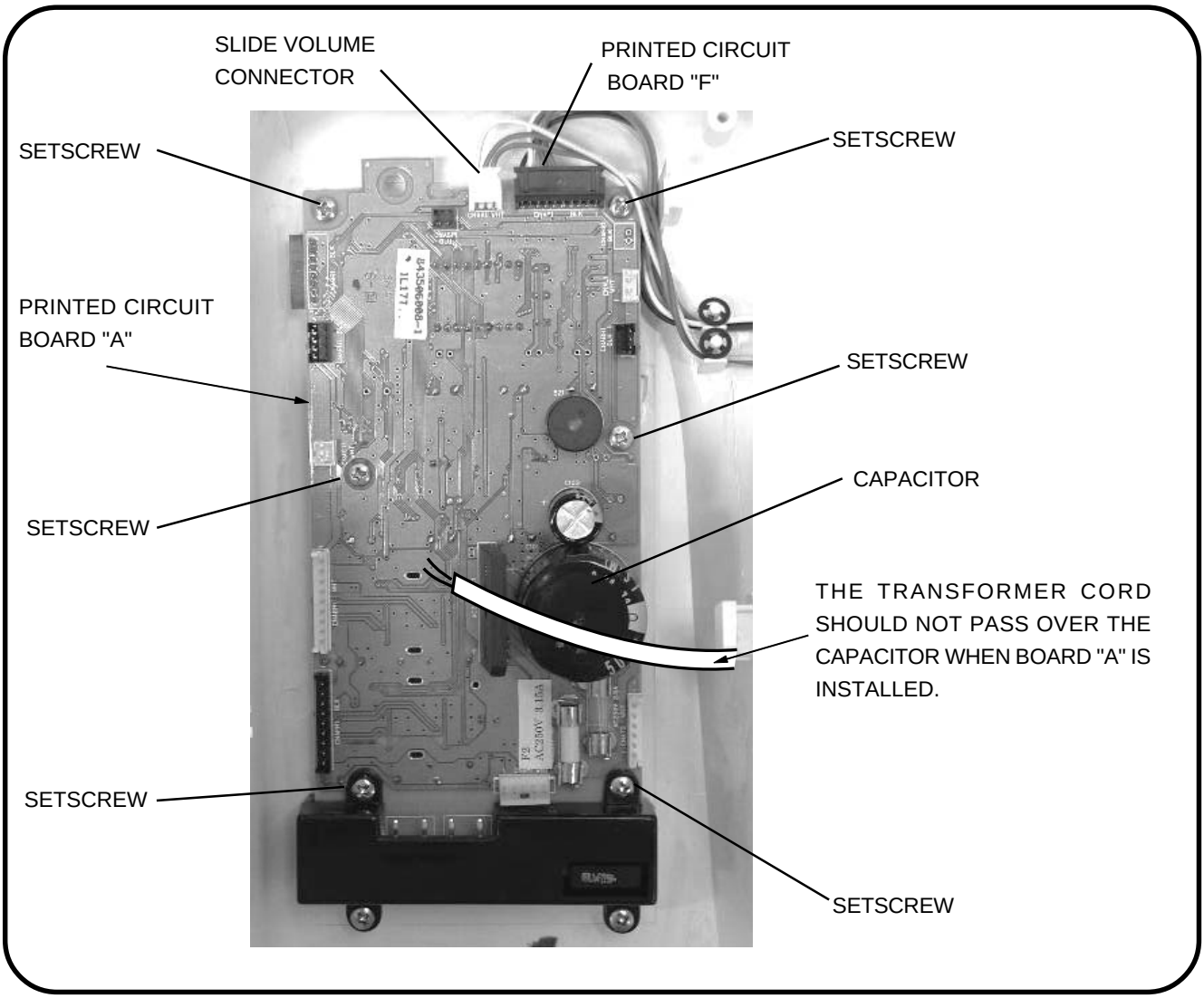

REPLACING SLIDE VOLUME AND PRINTED CIRCUIT BOARD F

REPLACING THE SLIDE VOLUME

TO REMOVE:

1. REMOVE THE FRONT COVER UNIT (SEE PAGE 6~7).
2. UNPLUG THE SLIDE VOLUME CONNECTOR.
3. REMOVE THE FOUR CS RING (A) AND REMOVE THE SIDE VOLUME.

TO INSTALL:

4. TO INSTALL THE SLIDE VOLUME, FOLLOW THE ABOVE PROCEDURE IN REVERSE.
   * SECURE THE LEAD WIRE ON THE BOARD USING THE CS RINGS, AS SHOWN.
   * CHECK TO ENSURE THAT THE SLIDE VOLUME MOVES SMOOTHLY BACK AND FORTH.

REPLACING PRINTED CIRCUIT BOARD "F"

TO REMOVE:

5. REMOVE THE FRONT COVER UNIT.
6. UNPLUG THE PRINTED CIRCUIT BOARD "F" CONNECTOR AND REMOVE THE FOUR CS RINGS.
7. REMOVE THE TWO SETSCREWS AND REMOVE THE PRINTED CIRCUIT BOARD "F".

TO INSTALL:

TO INSTALL THE PRINTED CIRCUIT BOARD "F". FOLLOW THE ABOVE PROCEDURE IN REVERSE.

* SECURE THE LEAD WIRE ON THE BOARD USING THE CS RING, AS SHOWN.
* EACH BUTTON (NEEDLE UP/DOWN BUTTON, START/STOP BUTTON, REVERSE BUTTON) SHOULD "CLICK" WHEN PRESSED.

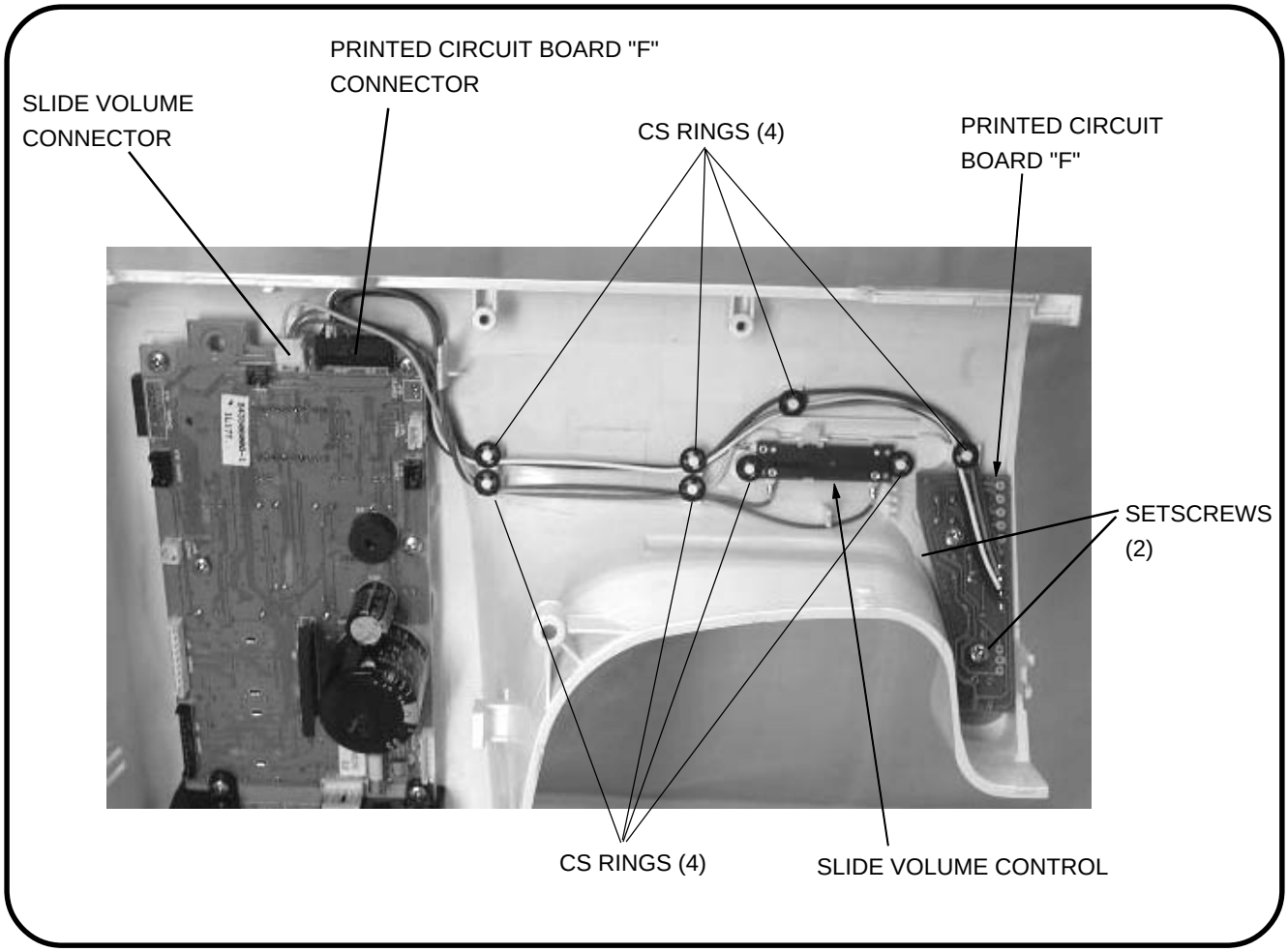

REPLACING DS MOTOR AND ADJUSTING MOTOR BELT TENSION

TO REMOVE:

1. REMOVE THE FRONT AND REAR COVERS (SEE PAGE 6~8).
2. REMOVE THE TWO SETSCREWS, THEN REMOVE THE DC MOTOR AND BELT.

TO INSTALL:

3. LIGHTLY TIGHTEN THE TWO SCREWS.
4. PUT THE MOTOR BELT ON THE PULLEY AND ADJUST THE BELT DEFLECTION TO ABOUT 7 TO 9 MM BY PRESSING THE MIDDEL OF THE MOTOR BELT WITH YOUR FINGER (WITH APPROXIMATELY 300 GRAMS OF PRESSURE). THEN, TIGHTEN THE SCREWS FIRMLY.
5. INSTALL THE FRONT AND REAR COVERS.

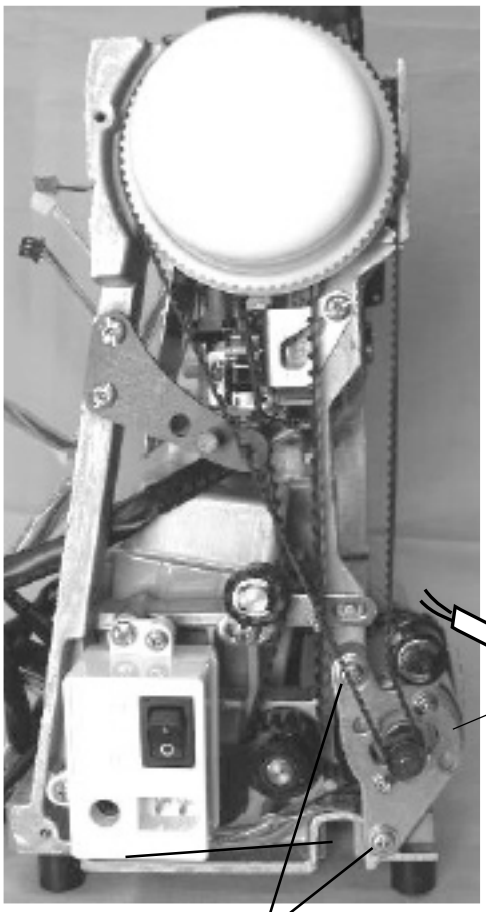

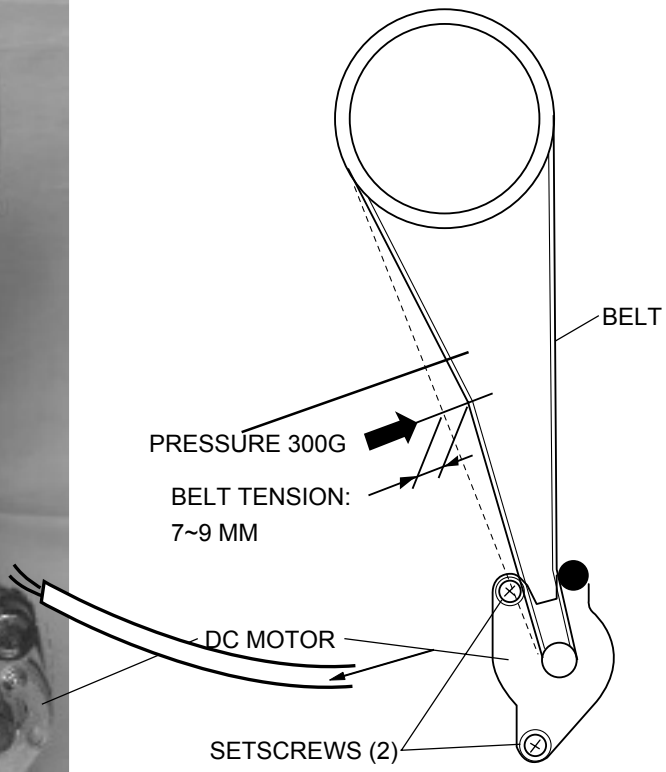

SETSCREWS (2)

REPLACING THE FUSES

REPLACING THE FUSES

TO REMOVE:

1. REMOVE THE FRONT COVER (SEE PAGE 6~7).
2. REMOVE THE FOUR SETSCREWS AND LIFT OFF THE COVER ON PRINTED CIRCUIT BOARD "A".
3. REMOVE THE FUSE.(PRY IT OUT WITH A SCREWDRIVER).

TO INSTALL:

4. FOLLOW THE ABOVE PROCEDURE IN REVERSE.

FUSE NO.	PART NO.	TYPE/SPECIFICATION
F1, F3	000-144-605	TSD-2.5A-250V 5.2 X 20 MM 2.5 A TIME-LAG FUSE
F2	000-182-904	3.15A-250V 5.2 X20 MM 3.15A TIME-RUG FUSE

NOTE

1. REPLACE THE PRINTED CIRCUIT BOARD "A" IF YOU NOTICE ANY BROWNING, DISCOLORATION, OR OTHER ABNORMALITIES.
2. ONLY INSTALL FUSES WITH THE CORRECT RATING.
3. IF THE FUSE IS LOOSE, BEND THE FUSE CLIPS INWARD TO SECURE THE FUSE.

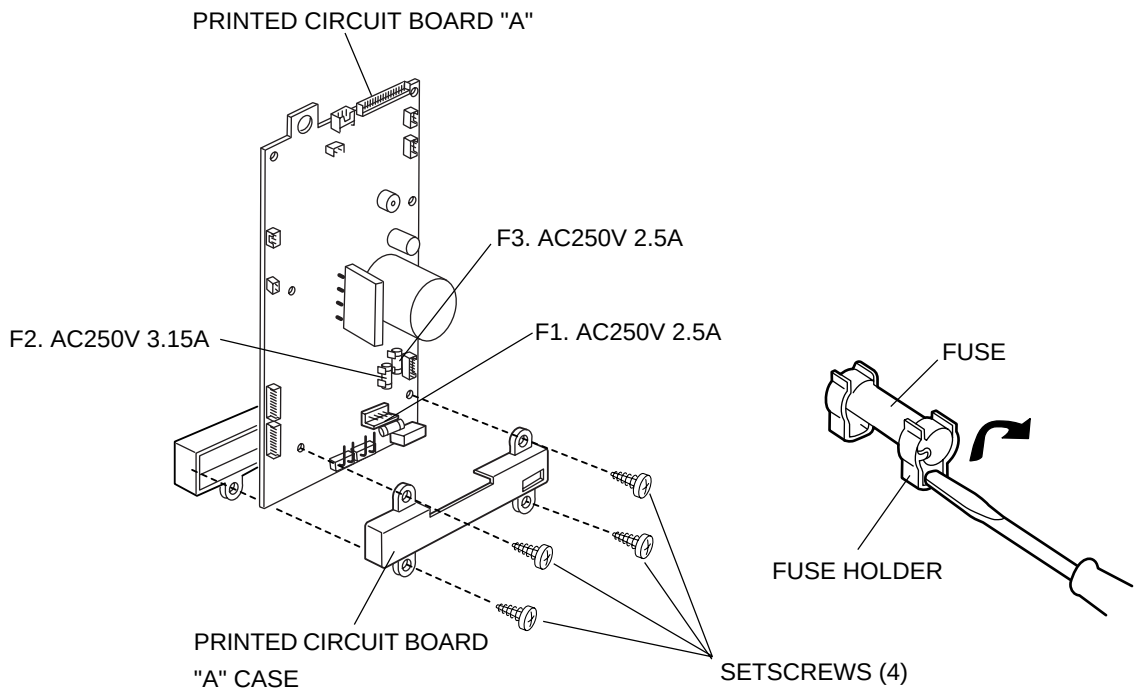

REPLACING MACHINE SOCKET (UNIT)

REPLACING THE MACHINE SOCKET

TO REMOVE:

1. REMOVE THE FRONT AND REAR COVER (SEE PAGE 6 ~ 8).
2. REMOVE THE TWO SCREWS AND REMOVE THE MACHINE SOCKET.

TO INSTALL:

3. TO INSTALL THE MACHINE SOCKET, FOLLOW THE ABOVE PROCEDURE IN REVERSE.

NOTE

PULL OUT THE CORD IN FRONT OF THE ARM TO PREVENT IT FROM CONTACTING WITH THE LOWER SHAFT OR OTHER MOVING PARTS, AND SECURE IT TO THE FEED MOTOR CORD WITH A BINDER.

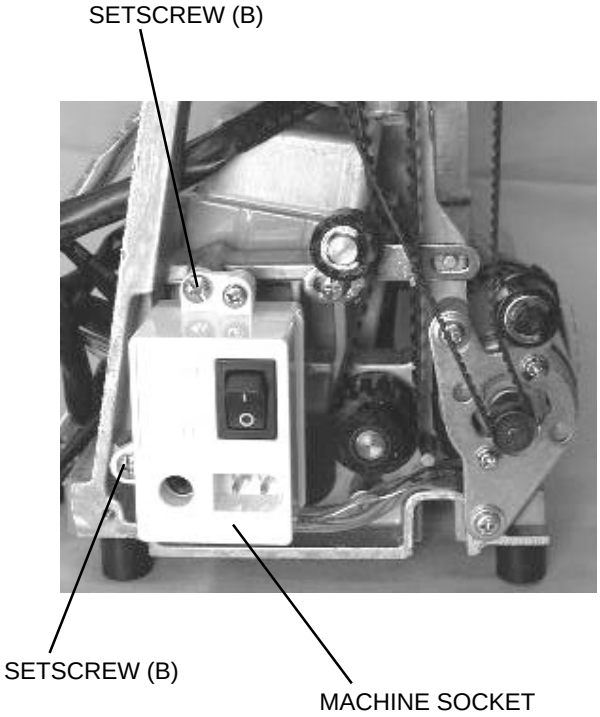

REPLACING THE TRANSFORMER

REPLACING THE TRANSFORMER

TO REMOVE:

1. REMOVE THE FRONT COVER (SEE PAGE 6~7).
2. REMOVE THE TWO SETSCREWS AND REMOVE THE TRANSFORMER.
   CUT OFF THE BINDER.

TO INSTALL:

3. TO INSTALL THE TRANSFORMER, FOLLOW THE ABOVE PROCEDURE IN REVERSE.

NOTE

1. PLACE THE REAR END OF THE TRANSFORMER ON THE TRANSFORMER SUPPORT.
   SLIDE THE TWO TRANSFORMER WIRE TUBES TO THE SIDE OF TRANSFORMER AND SECURE THEM TO THE ZIGZAG STEPPING MOTOR WIRE SO THEY WILL NOT COME IN CONTACT WITH ANY MOVING PARTS.

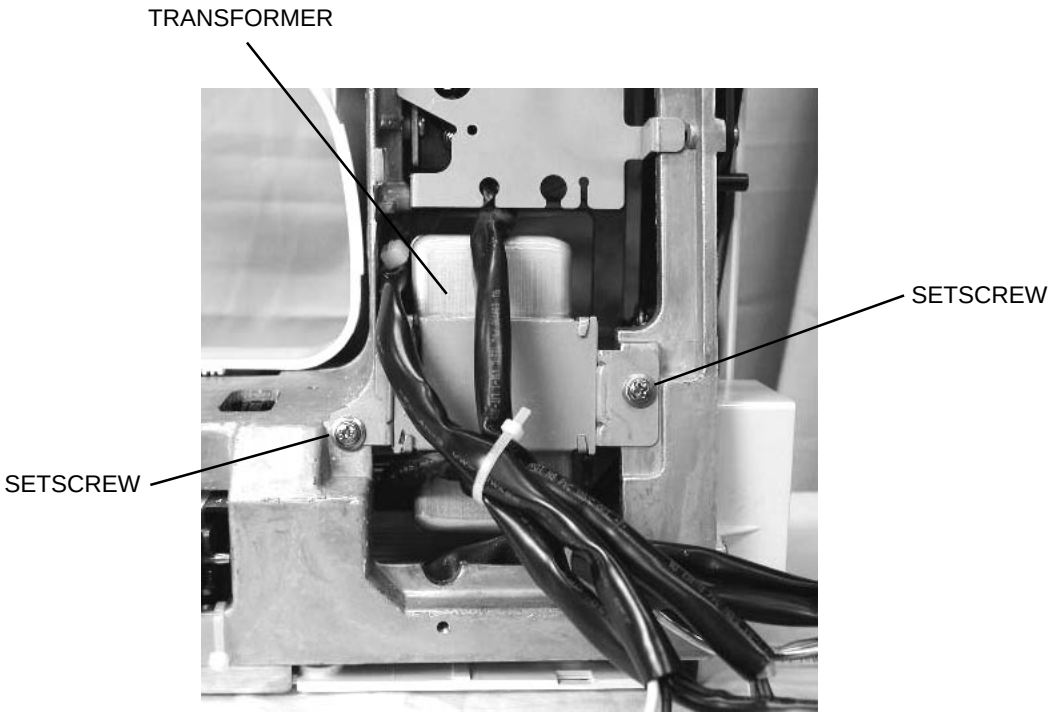

REPLACING THE ZIGZAG WIDTH MOTOR

REPLACING THE ZIGZAG WIDTH MOTOR

TO REMOVE:

1. REMOVE THE FRONT AND REAR COVER (SEE PAGE 9~11).
2. REMOVE THE TWO SETSCREWS AND REMOVE THE ZIGZAG WIDTH MOTOR PROTECTOR PLATE. CUT OFF THE BINDER.
3. REMOVE THE TWO ZIGZAG ROD SETSCREWS.
4. REMOVE THE TWO SETSCREWS AND REMOVE THE ZIGZAG WIDTH MOTOR.

TO INSTALL:

5. TO INSTALL THE ZIGZAG WIDTH MOTOR, FOLLOW THE ABOVE PROCEDURE IN REVERSE.

NOTE

1. THE SETSCREW OF ZIGZAG ROD SHOULD BE TIGHTENED TO 5~7 KG OF TORQUE.
2. CHECK TO ENSURE THAT THE UPPER SHAFT SENSOR MOUNTED ON THE ZIGZAG WIDTH MOTOR DOES NOT INTERFERE WITH THE UPPER SHAFT SHIELD PLATE.
3. ADJUST THE NEEDLE DROP POSITION (SEE PAGE 13).

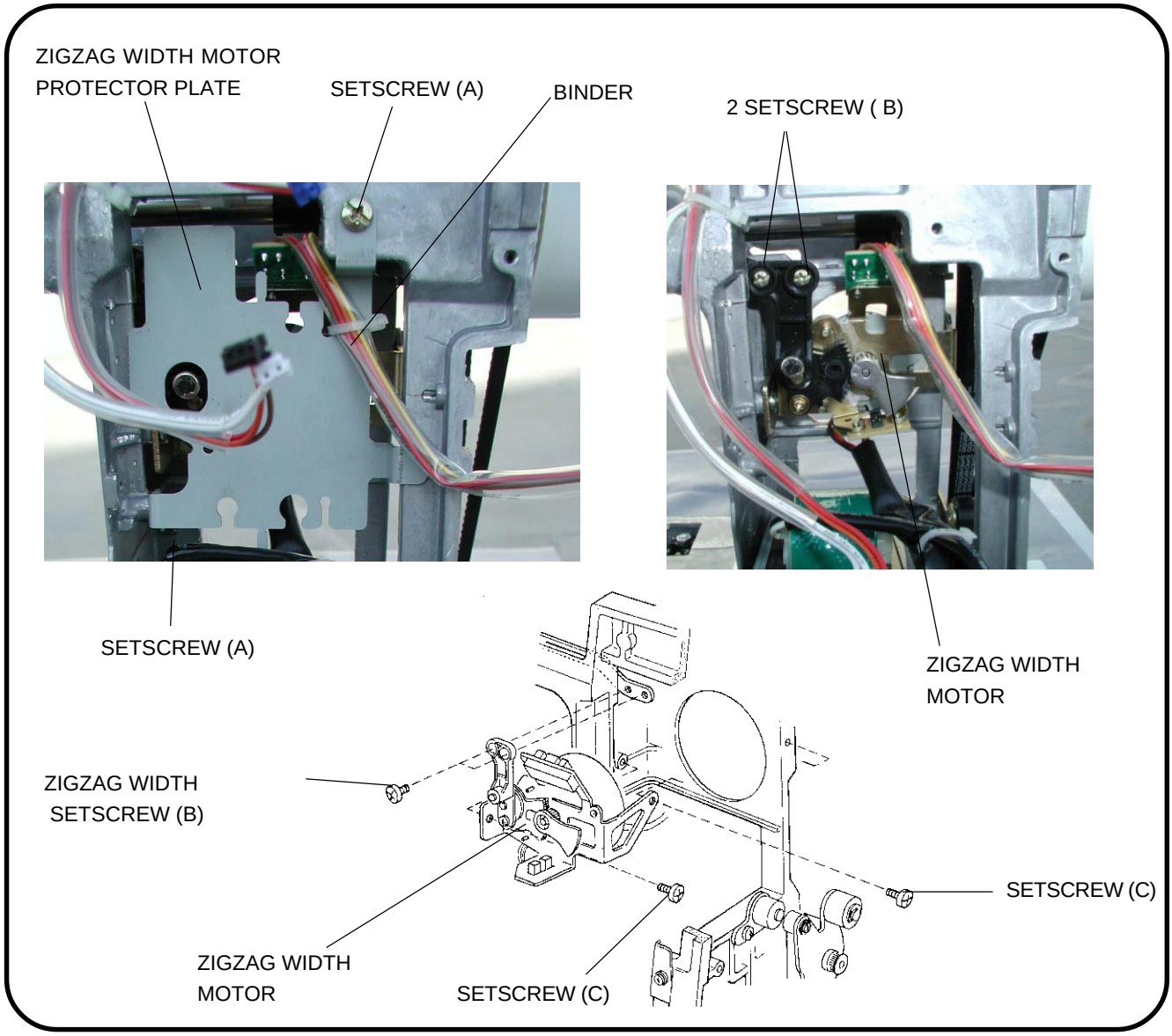

REPLACING THE FEED STITCH MOTOR

REPLACING THE FEED MOTOR

TO REMOVE:

1. REMOVE THE FRONT COVER AND REAR COVERS (SEE PAGE 9~11).
2. REMOVE THE SNAP RING (E-3).
3. REMOVE THE TWO SETSCREWS AND REMOVE THE FEED MOTOR.
   CUT OFF THE CORD BINDER.

TO INSTALL:

4. TO INSTALL THE FEED MOTOR, FOLLOW THE ABOVE PROCEDURE IN REVERSE.

NOTE

1. ADJUST THE STRETCH STITCH PATTERNS (SEE PAGE 21).

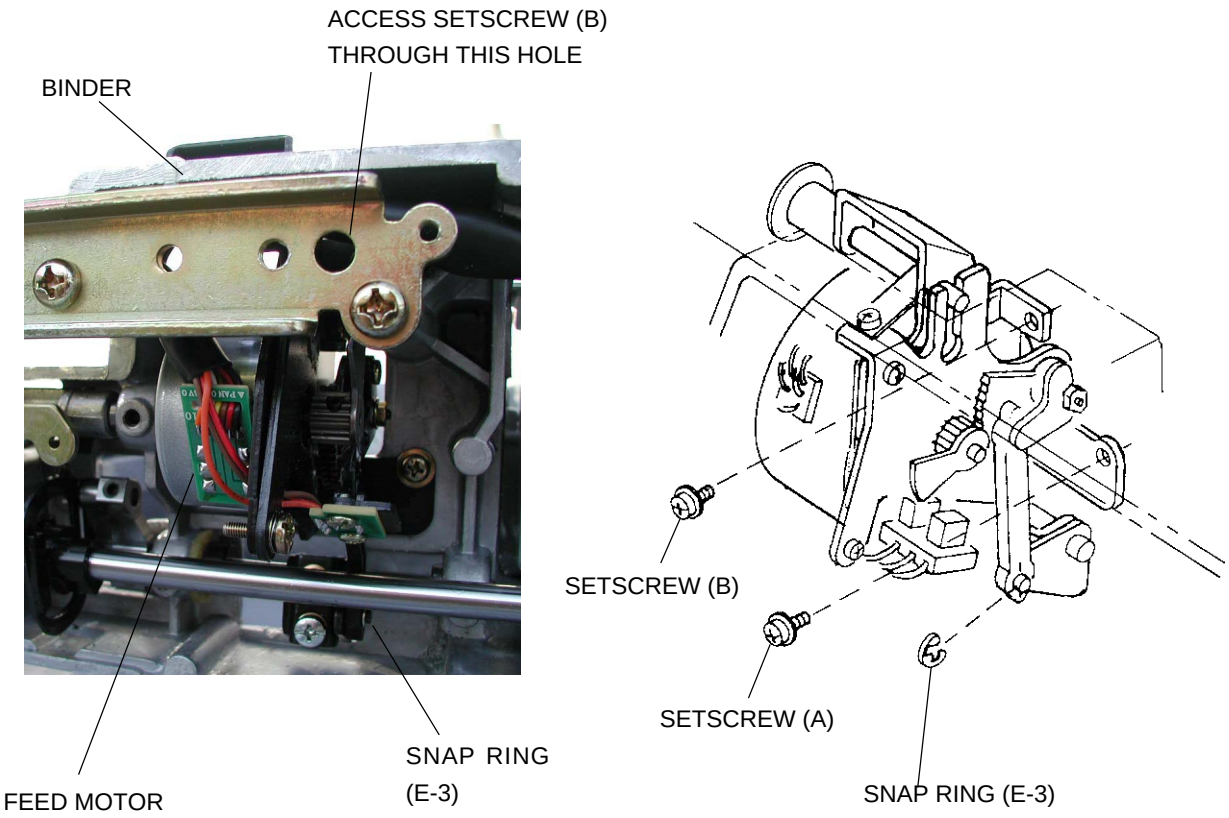

ADJUSTING BUTTONHOLE LEVER POSITION

TO ADJUST THE BUTTONHOLE LEVER GUIDE:

1. SET THE MACHINE IN BUTTONHOLE SENSOR ADJUSTING MODE.
   (SEE BELOW. THE LED SHOULD DISPLAY "H" OR "L".)
2. REMOVE THE FACE COVER AND LOOSEN SETSCREW (A).
3. LOWER THE BUTTONHOLE LEVER. LOOSEN THE SETSCREW AND POSITION THE BUTTONHOLE LEVER GUIDE SO THE LED DISPLAYS "L" . TIGHTEN SETSCREW (A).

TO ADJUST THE BUTTONHOLE SENSOR POSITION:

4. INSTALL THE BUTTONHOLE FOOT (R).
5. LOWER THE BUTTONHOLE LEVER TO ITS LOWEST POSITION, AND INSERT A 1.6 MM CLEARANCE GAUGE.
6. TURN THE ADJUSTING SCREW TO THE LEFT UNTIL THE LED DISPLAY CHANGES FROM "L" TO "H".
7. NEXT, TURN THE ADJUSTING SCREW TO THE RIGHT UNTIL THE LED DISPLAY CHANGES FROM "H" TO "L".
8. CHECK THE LED. WHEN THE CLEARANCE OF THE BUTTONHOLE FOOT IS 1.4 MM, THE LED DISPLAYS "H"; WHEN THE CLEARANCE IS 1.8 MM, THE LED DISPLAYS "L".
9. TURN OFF THE POWER SWITCH.
10. INSTALL THE FACE COVER.

NOTE

IF THERE IS ANY LINT IN THE BUTTONHOLE SENSOR SLIT, CLEAN OUT WITH A SWAB.

TO ENTER ADJUSTING MODE:

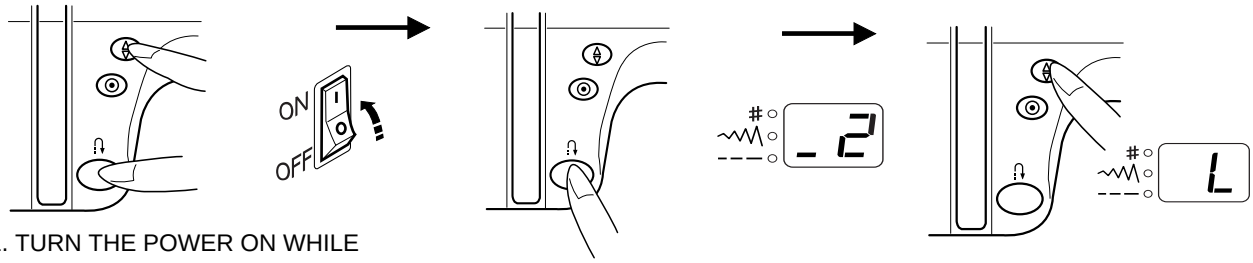

1. TURN THE POWER ON WHILE PRESSING THE NEEDLE UP/DOWN BUTTON AND REVERSE BUTTON SIMULTANEOUDLY. (HOLD BOTH BUTTONS DOWN UNTIL THE LED DISPLAYS THE ADJUSTING MODE.)
2. PRESS THE REVERSE BUTTON TO SELECT "2".
3. PRESS THE NEEDLE UP/DOWN BUTTON.

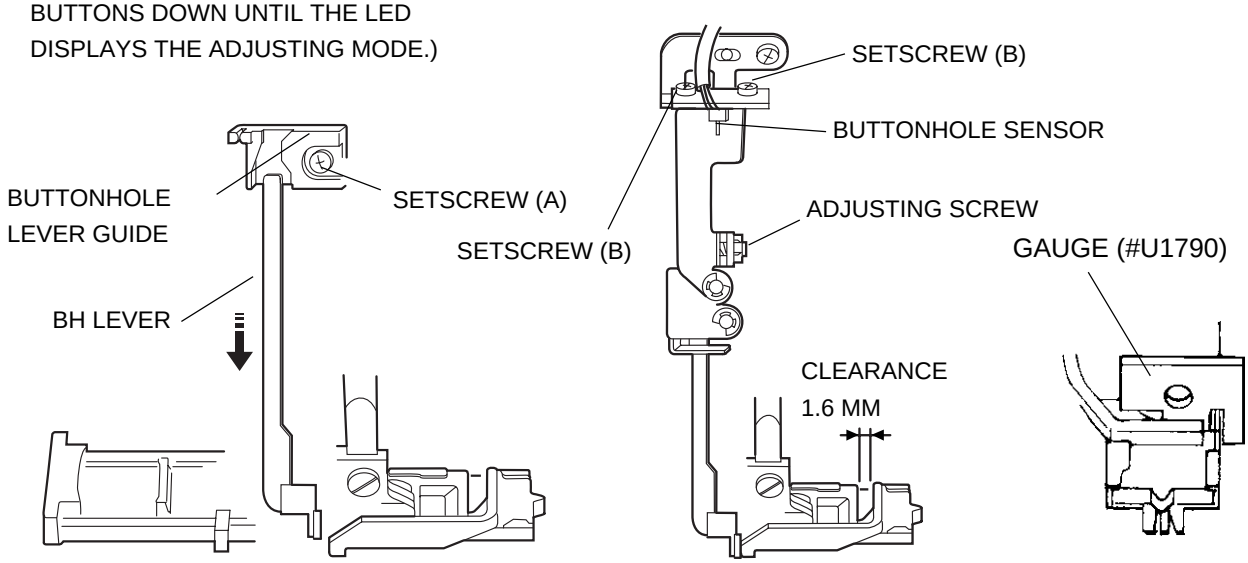

ADJUSTING THE BOBBIN WINDER SWITCH

TO ADJUST THE BOBBIN WINDING SWITCH

1. REMOVE THE FRONT COVER (SEE PAGE 6 - 7).
2. SET THE BOBBIN WINDER ARM IN THE SEWING POSITION AND LOOSEN THE SETSCREW. ADJUST THE CLEARANCE BETWEEN THE BOBBIN WINDER ARM AND THE SWITCH FIXING PLATE TO O.7 TO 1.3 MM.
3. TIGHTEN THE SETSCREW.
4. INSTALL THE FRONT COVER.

TO CONFIRM:

TURN THE POWER SWITCH ON.
THE LED DISPLAYS SP WHEN THE BOBBIN WINDER SPINDLE IS SET THE BOBBIN WINDING POSITION, AND 01 WHEN THE BOBBIN WINDER IS RETURNED TO THE SEWING POSITION.

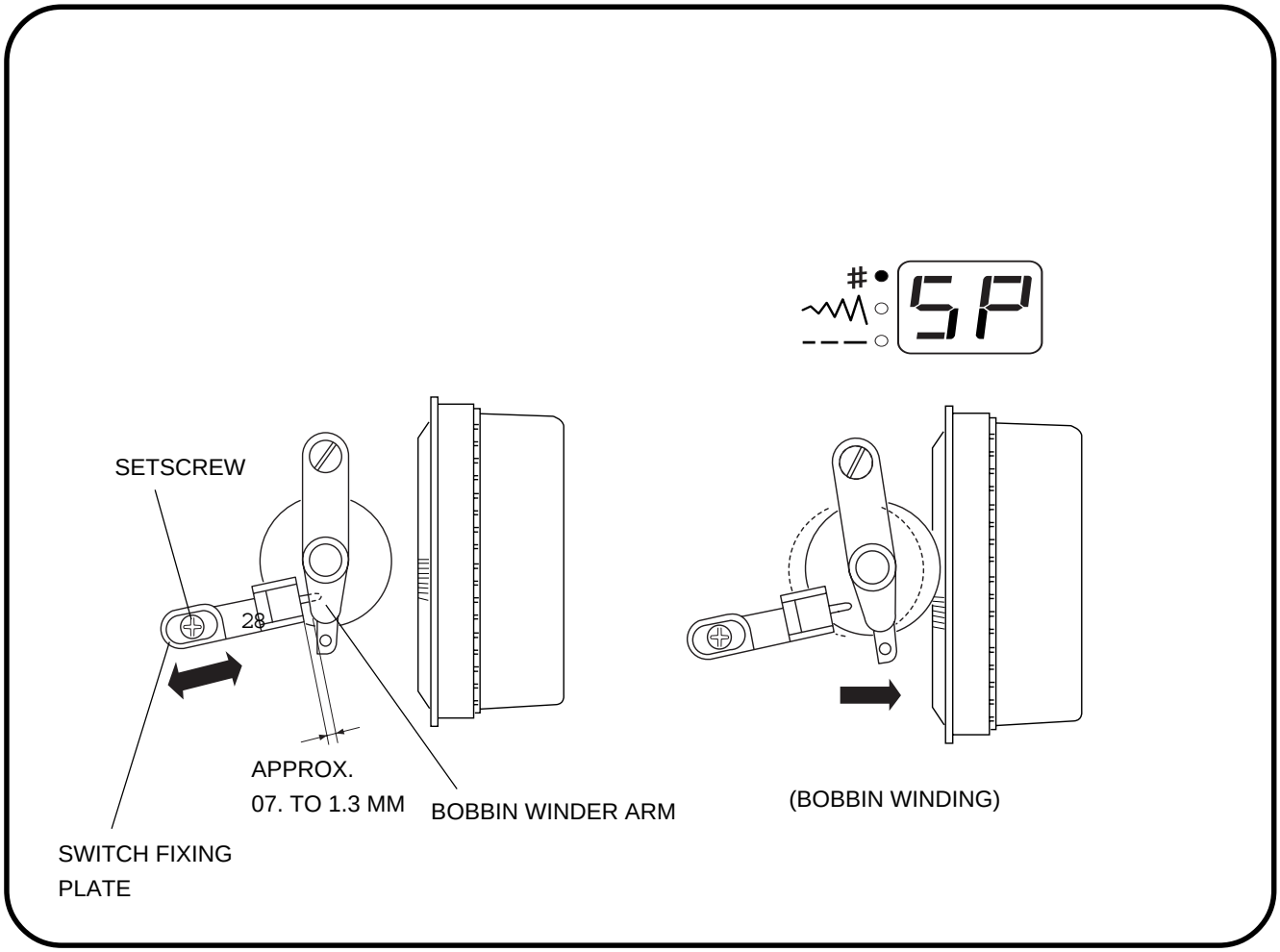

OILING

FACTORY LUBRICATED PARTS WILL PROVIDE YEARS OF HOUSEHOLD SEWING WITHOUT ROUTINE OILING, BUT YOU SHOULD STILL CHECK FOR POSSIBLE LUBRICATION NEEDS WHENEVER SERVICING MACHINES.

OIL:

USE GOOD QUALITY SEWING MACHINE OIL AT THE POINTS (A, B, C, D, E, F,G,H,I,J & K) INDICATED BY THE BLACK ARROWS.

GREASE:
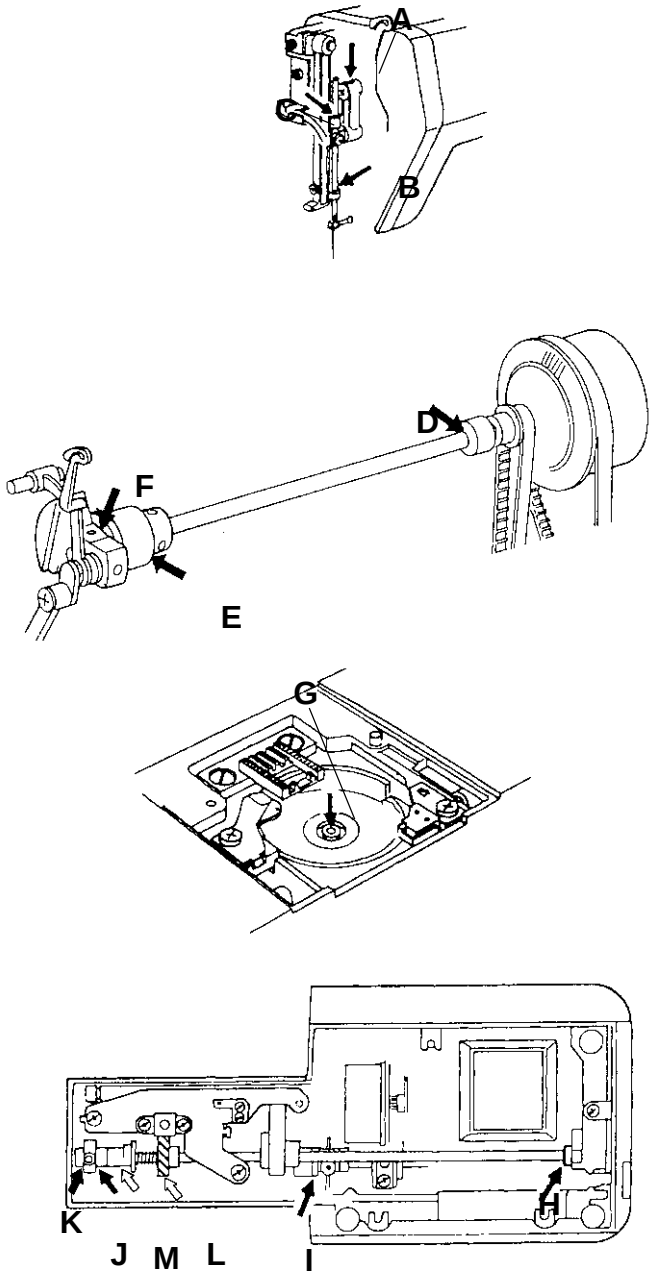
USE WHITE GREASE SUCH AS MOLYCOTE EM-40M AT THE POINTS (L& M) INDICATED BY THE WHITE ARROWS.