SERVICE MANUAL

MC11000

CONTENTS

Changing External Parts
Face and top covers 1
Belt cover 2
Bed cover 3
Base 4
Front cover 5
Rear cover 6
Thread tension unit 7
Thread cutter unit 8
Needle threader motor 9-10

Wiring Diagram 11

Replacing:
Printed Circuit Board A 12
Printed Circuit Boards F1, F2 and Slide volume 13
Printed Circuit Board B 14
Switching Power Supply 15
DC Motor and Adjusting Motor Belt Tension 16

Adjusting:
Needle Drop Position 17
Hook Timing 18
Needle bar height 19
Clearance between Needle and Hook 20
Backlash between Hook Drive Gear and Lower Shaft Gear 21
Presser Foot Position and Height 22
Feed dog height 23
Height of Embroidery Foot P 24
Shield Plate Position 25
Tension Release Mechanism 26
Needle Thread Tension 27

Replacing and Adjusting Threader plate 28

Adjusting Needle Threader Switch 29

TTP Adjusting Mode 30

Adjusting:
Stretch Stitch Balance 31
Presser Foot Lifter Sensor 32
Buttonhole Lever 33
Presser Foot Sensor 34
Remaining Bobbin Thread Sensor 35
Thread Cutter Solenoid 36
Upper Shaft Clutch Solenoid 37
Thread Cutter Switch 38
Bobbin Winder Stopper 39
Threader Drawing Lever 40
X and Y Sensors 41
Sewing Start Position 42

Setting Position of Thread Take Up lever 43

To Adjust:
Upper Shaft Declutch Device 44

Setting Position of Parts on Lower Shaft 45

Setting Position of Upper and Lower Shafts 46

Changing External Parts (1)

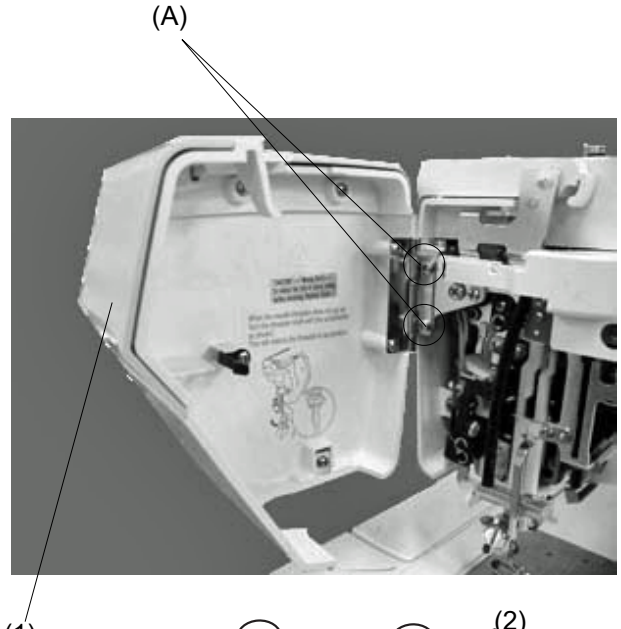

Replacing the face cover

To remove:

1 Remove the 2 screws (A) and remove the face cover (1).

To attach:

2 Follow the above procedure in reverse.

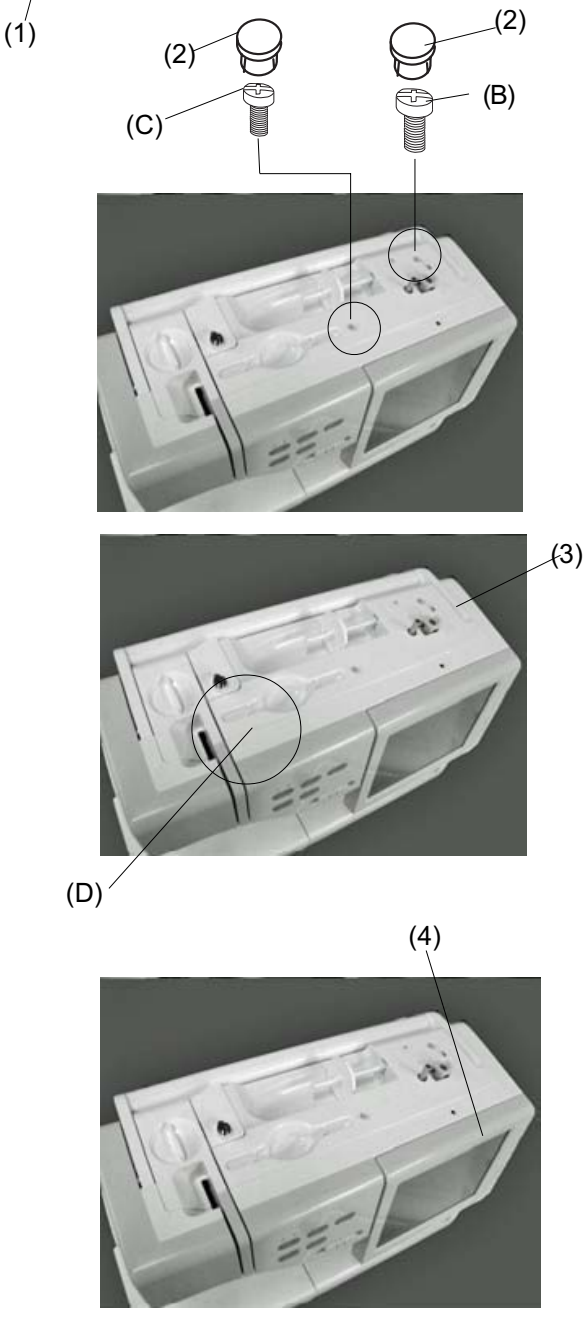

Replacing the top cover

To remove:

1. Open the face cover.
2. Remove the 2 caps (2) and their screws (B) and (C). Raise the carrying handle (3) and remove the screw (D).
3. Raise the top cover and disconnect the bobbin winder connector (4). Remove the top cover sliding towards the back.
   Note: The pressure dial is removed with the top cover.

To attach:

4. Raise the carrying handle and insert the top cover guiding it in from the back.
5. Connect the bobbin winder connector to printed circuit board A.
6. Tighten the screws (B), (C) and (D).
7. Attach the caps.

Changing External Parts (2)

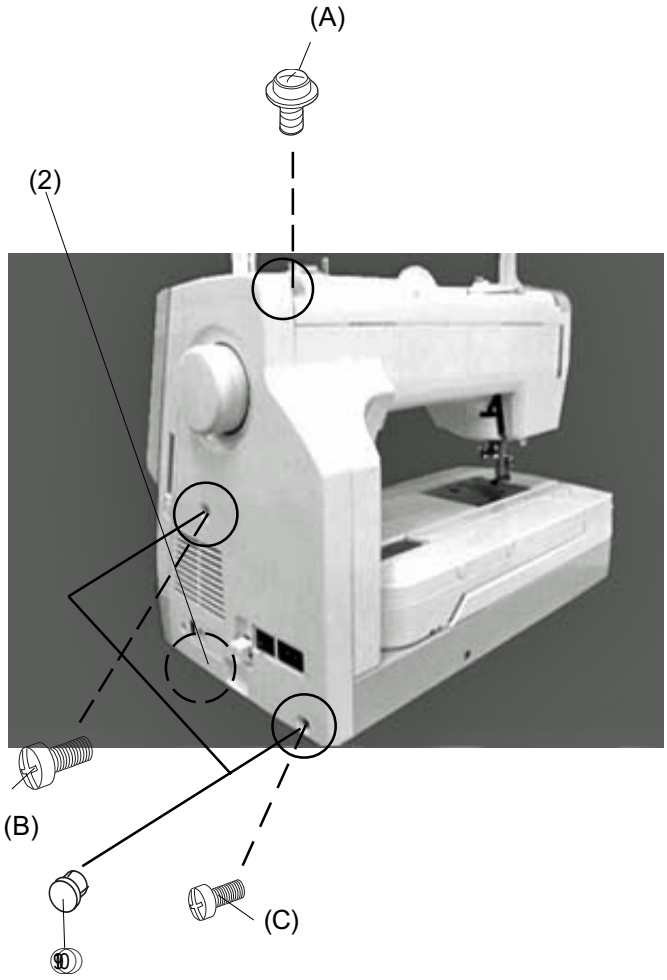

Replacing the belt cover

To remove:

1. Loosen the screw (A) .
2. Remove the 2 caps (1) and their screws (B) and (C).
3. While pushig down the stopper (2) under the belt cover remove the belt cover.

To attach:

4. Match the belt cover position with the front cover.
5. Attach the belt cover while pushing the stopper down.
6. Tighten the 3 screws (A), (B) and (C).
7. Attach the caps (1).

Changing External Parts (3)

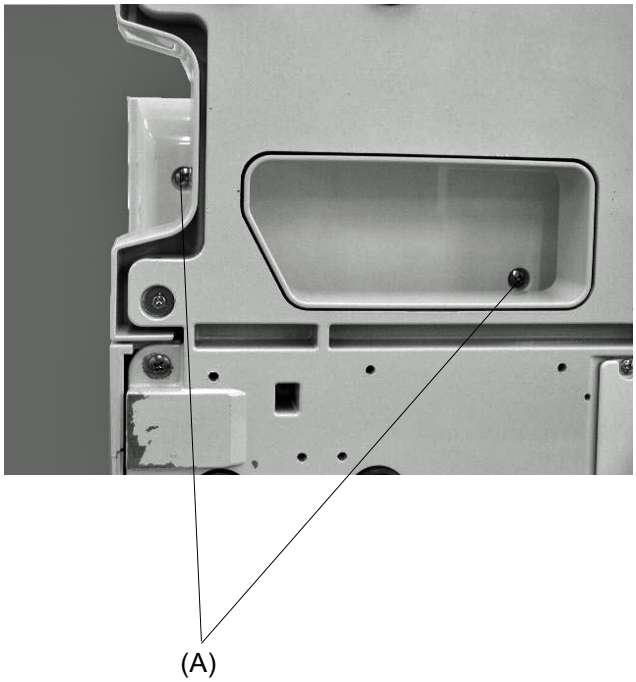

Replacing the bed cover

To remove:

1. Remove the extension table.

2. Remove the 2 screws (A) and remove the bed cover.

To attach:

3. Follow the above procedure in reverse.

Changing External Parts (4)

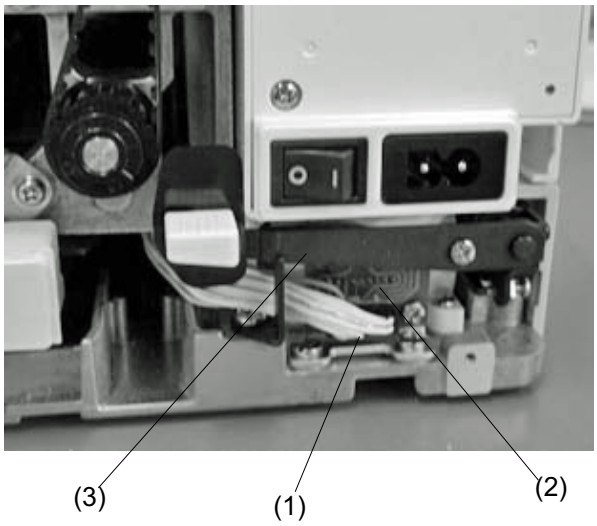

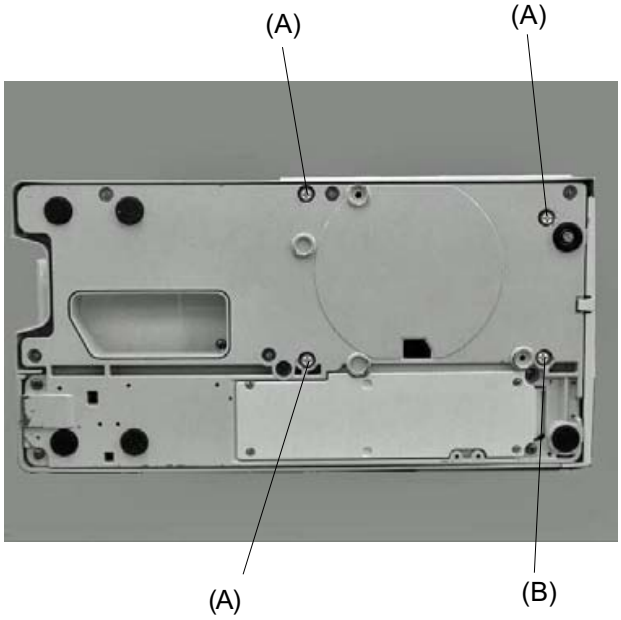

Replacing the base

To remove:

1. Remove the extension table.

2. Remove the belt cover.

3. Disconnect the connector (1) from printed circuit board S1 (2).

4. Remove the screws (A) and (B) and remove the base. When removing the base, push the machine body away from you. (Do not pull the base toward you.)

To attach:

5. Tighten the 4 screws (A) and (B) slightly.

6. **Attach the extension table.**

7. Match the extension table, base and free arm position and tighten the screw (B).

8. Tighten the remaining screws (A).

9. Insert the connector to the printed circuit board S1 from opening between the releasing arm (3) and machine body.

10. Attach the belt cover.

Changing External Parts (5)

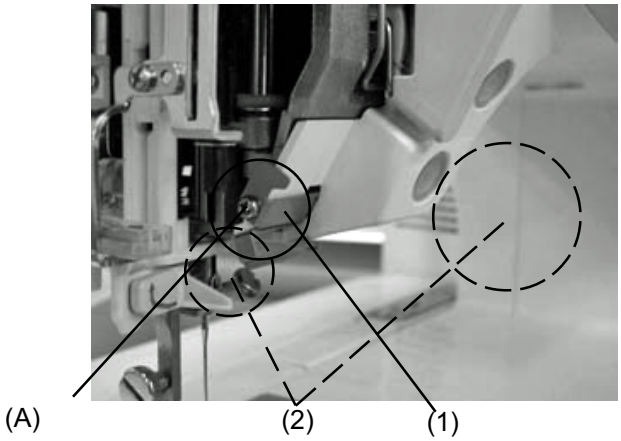

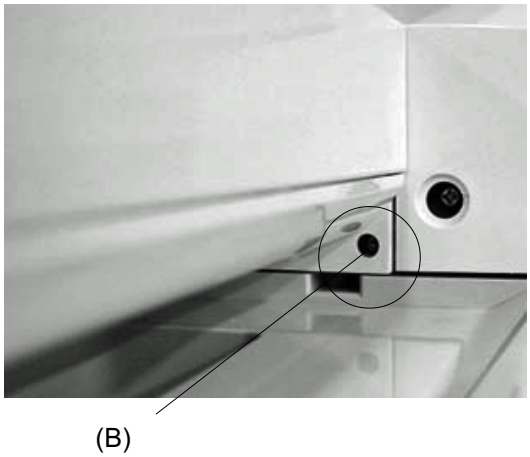

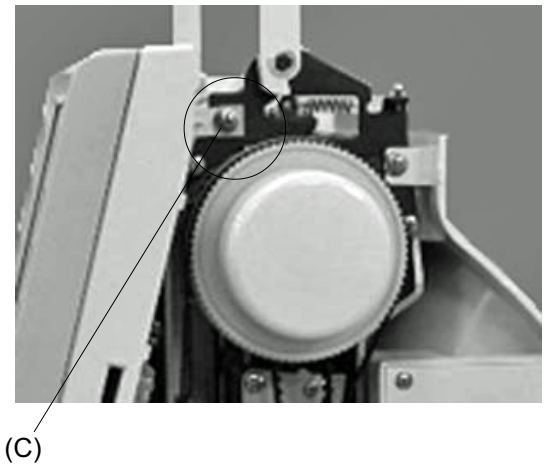

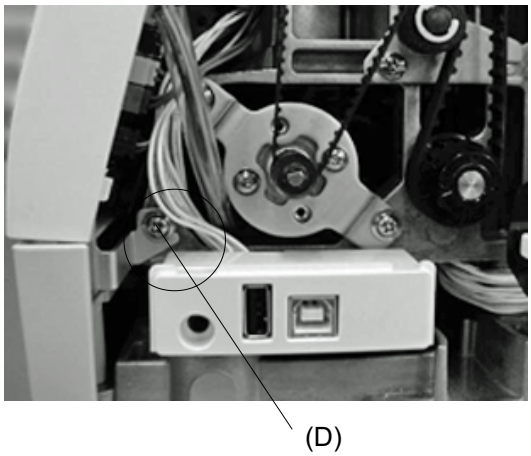

Front cover

To remove:

1. Open the face cover and remove the top cover, belt cover and extension table.
2. Remove the screw (A) and remove the rear arm thread guide (1).
3. Loosen the screw (B).
4. Loosen the screw (C) and remove the screw (D).
5. Disconnect each connector and remove the front cover.

Note: Unlock the hooks (2) while removing the front cover.

To attach:

6. Follow the above procedure in reverse.

Changing External Parts (6)

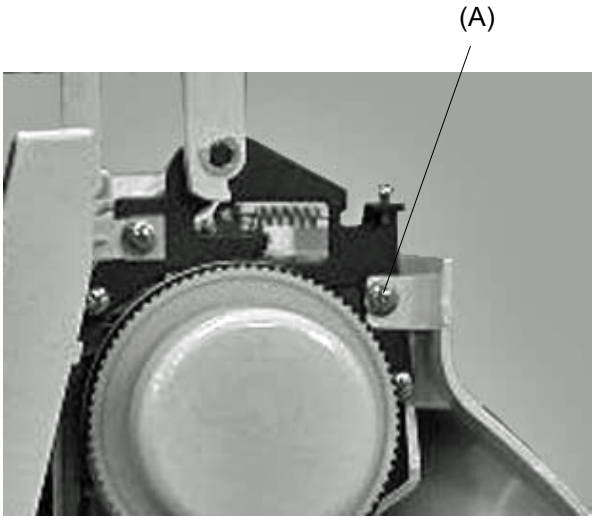

Rear cover

To remove:

1. Remove the top cover, belt cover and base.

2. Loosen the screws (A), (B) and (C) and remove the screw (D) .

3. Lower the presser foot and remove the rear cover.

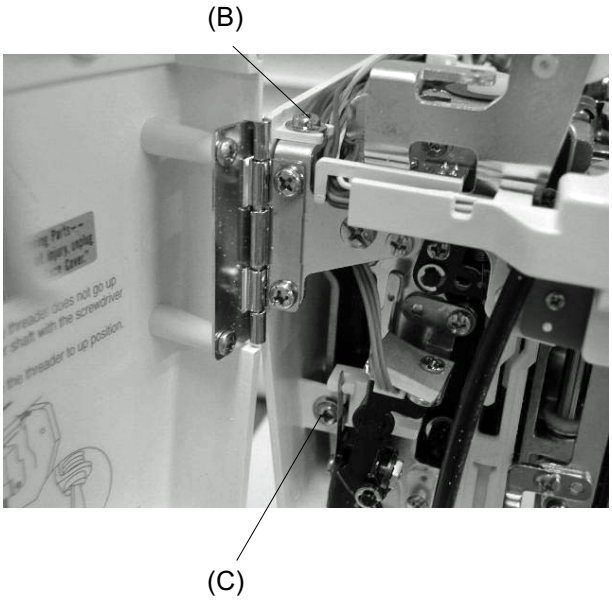

To attach:

4. Follow the above procedure in reverse.

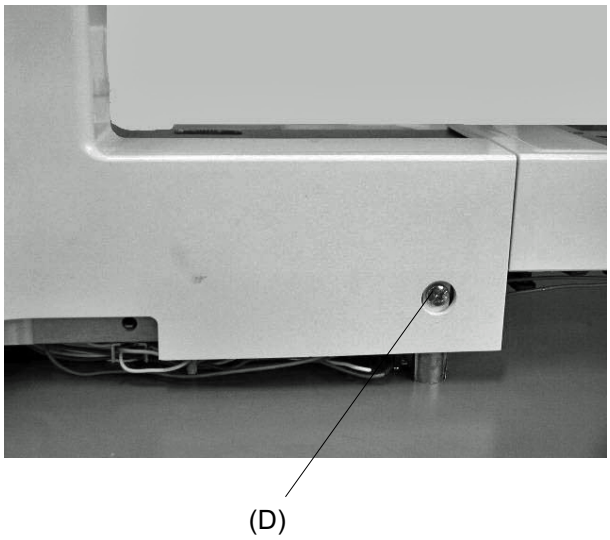

Changing Thread Tension Unit

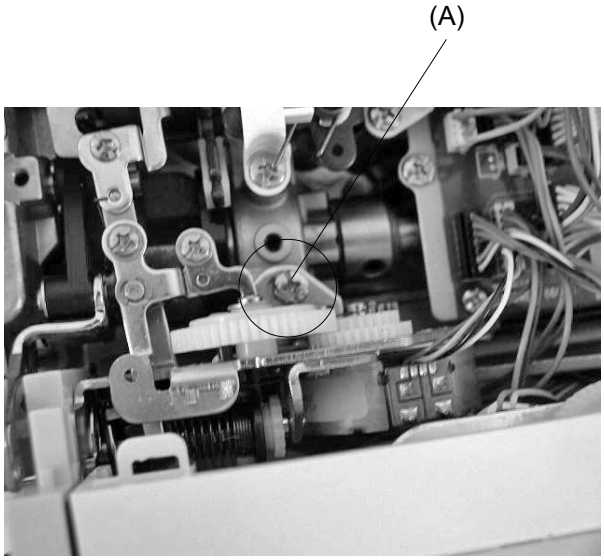

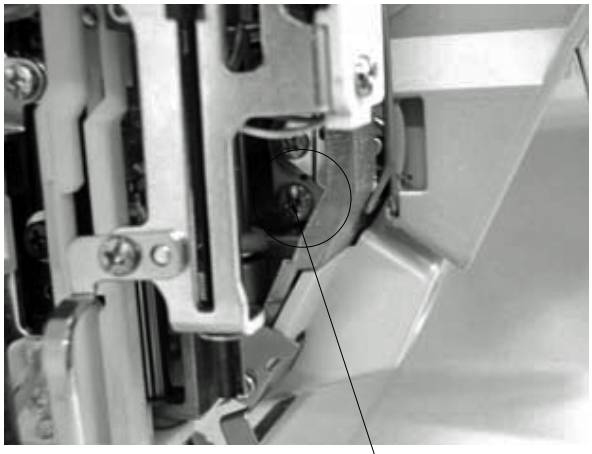

To remove:

1. Remove the front cover.
2. Lower the presser foot.
3. Remove the screws (A) and (B).
4. Pull the connector out from the ìUî board and remove the thread tension unit.

To attach:

3. Follow the above procedure in reverse.

Note: After changing the thread tension, make sure that the tension release mechanism works correctly. (See page 26)

Replacing the Thread Cutter unit

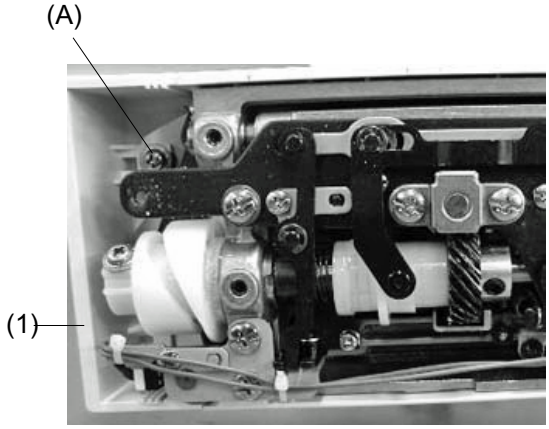

1. Remove the needle plate and bed cover.

2. Loosen the screw (A) and remove the thread cutter cover (1) .

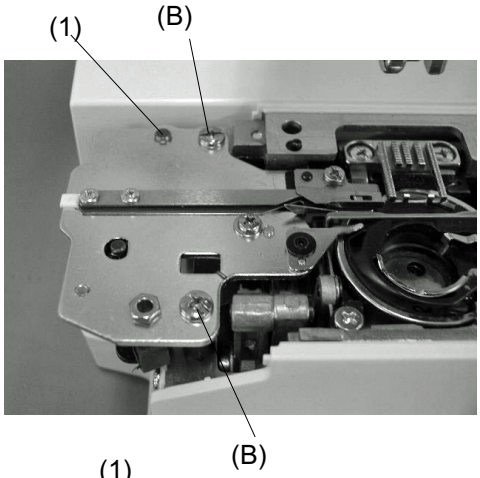

3. Remove the 2 screws (B) and remove the thread cutter unit.

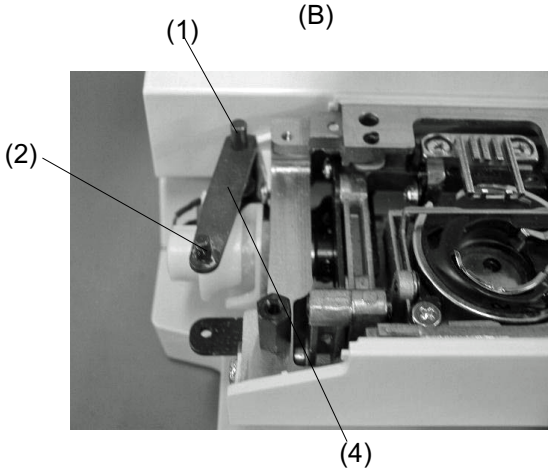

4. Insert the pins (1) and (2) into the thread cutter hole and attach the thread cutter unit with the screw (B).

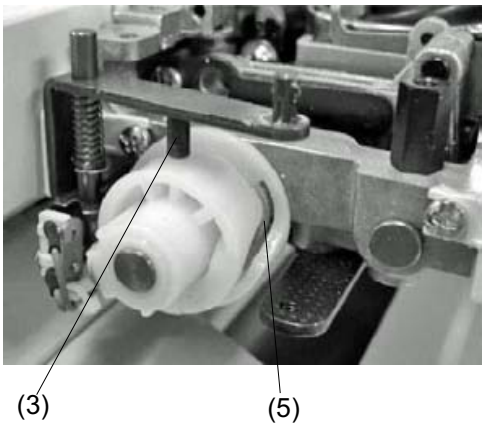

Note: After changing the thread cutter unit, check that the driving arm(4) is functioning properly by turning the handwheel.

1. Lower the needle bar to its lowest position.
2. Push the driving arm (1) down and insert the pin (3) into the groove of the cutter driving cam (5).
3. Turn the handwheel to drive the cutter slide plate.
4. When the sliding plate returns from the rightmost position, the drawing arm (1) should be released and return to the “UP” position.

Replacing Needle Threader Motor (1)

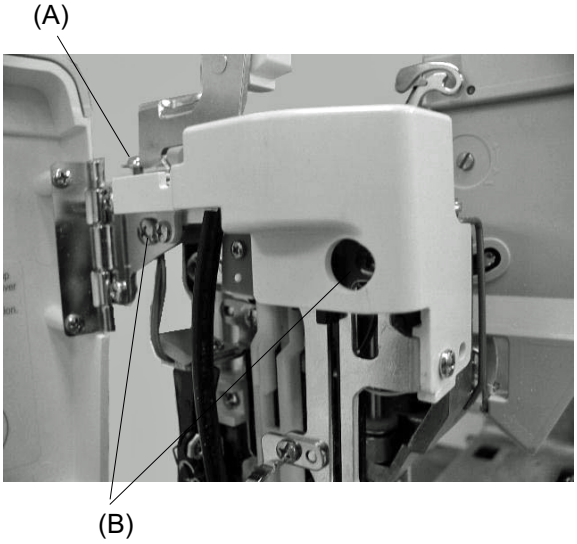

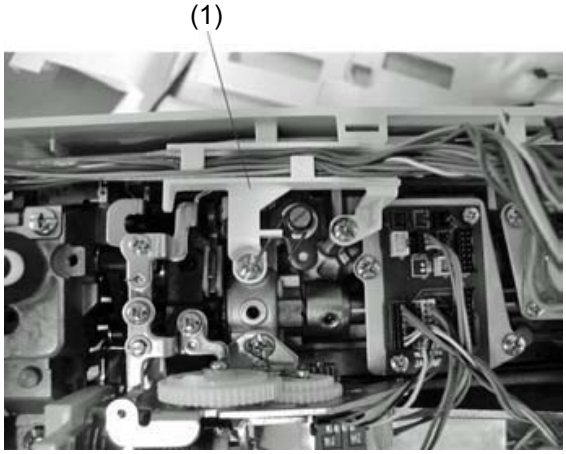

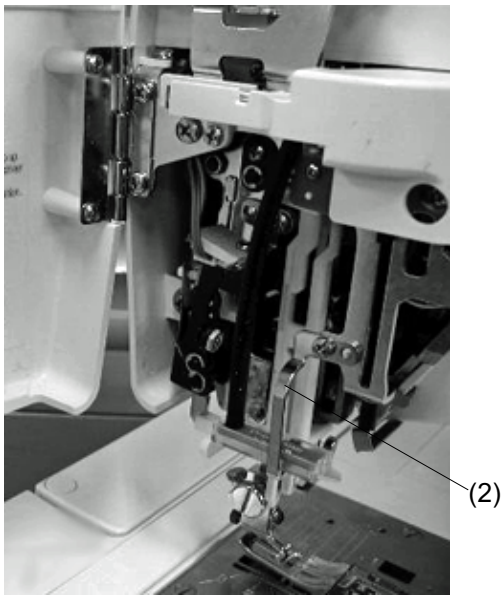

To remove:

1. Remove the face cover and the top cover.
2. Loosen the screw (A).
3. Disconnect the bobbin winding motor and the needle threader sensor from printed circuit board U.

Note: Remove the cords from the cord guide (1).

4. Remove the 2 screws (B) and remove the motor.

Note: Remove the lamp supporter (2) before replacing the motor.

Replacing Needle Threader Motor (2)

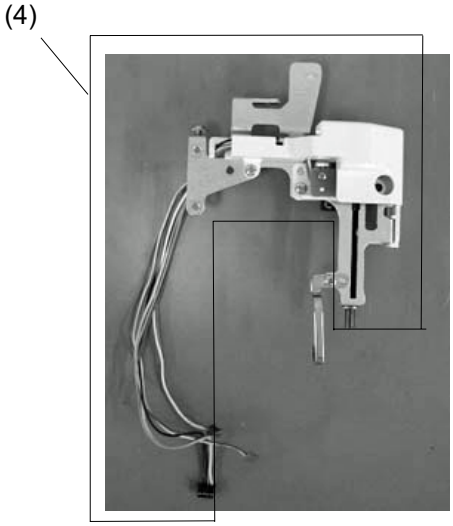

To attach:

5. Insert the projection (1) of the needle bar supporter into the corner part of the moval body (2).

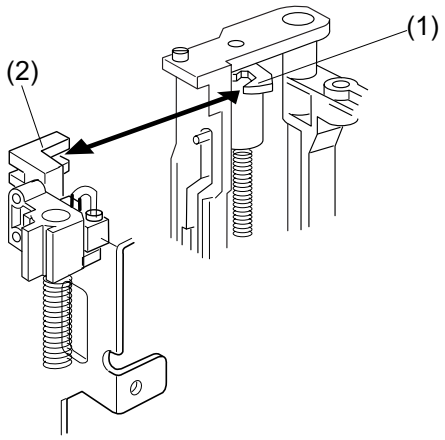

6. Attach the motor (4).
7. Insert each cord into the cord guide (3) and connect to printed circuit board U. Attach the front cover.
8. Attach the face cover and top cover.

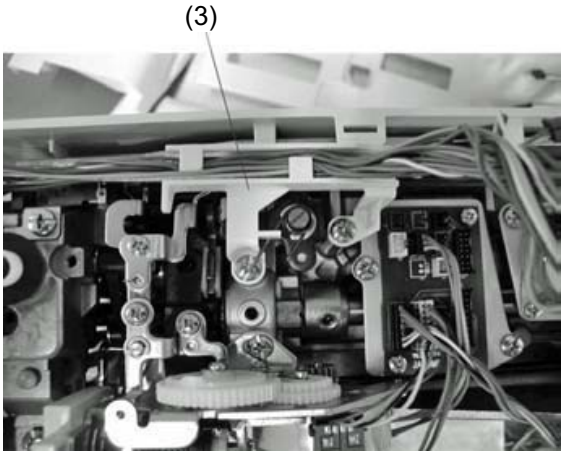

Wiring Diagaram

Printed circuit board A

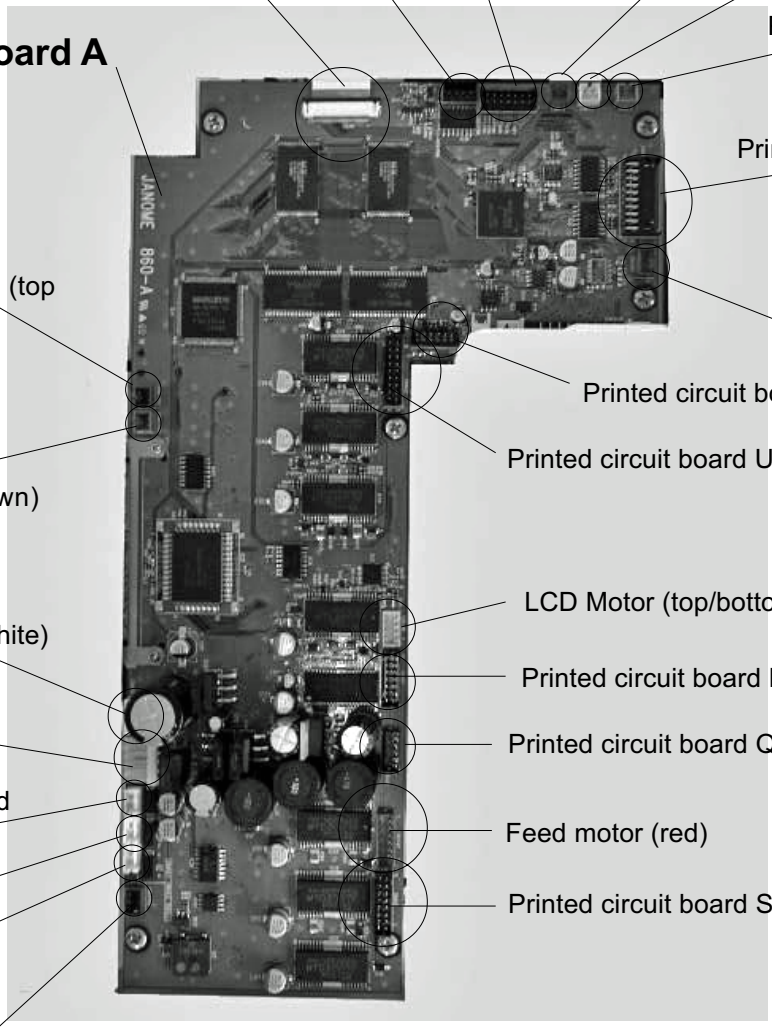

Bobbin winder (black)

Printed circuit board R (white)
(Since it is easy to break, remove this part with extreme care.)

Printed circuit board U (black)

Printed circuit board L2 (gray)

Printed circuit board L2 (white)

Printed circuit board F1 (red)

Printed circuit board F2 (black)

Slide volume (red)

Printed circuit board B (black)

Printed circuit board U (black)

LCD Motor (top/bottom)

Printed circuit board P (black)

Printed circuit board Q (black)

Feed motor (red)

Printed circuit board S1 (black)

LCD detection switch (top position)(blue)

LCD detection switch (bottom position)(brown)

Switching regulator (white)

DC Motor (white)

Remaining bobbin thread solenoid (black)

Thread cutter solenoid (white)

Upper shaft disconnect solenoid (red)

Potentiometer (blue)

Printed circuit board U

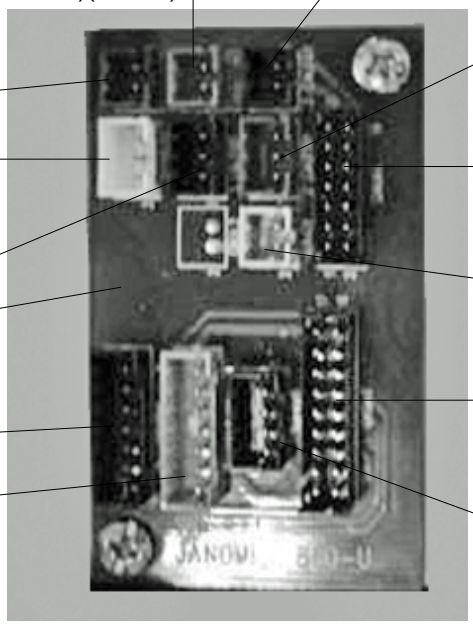

Needle threader motor detection switch (bottom)(brown)

Presser foot lifter sensor (brown)

P foot sensor (blue)

Printed circuit board A (black)

Printed circuit board L3 (gray)

Printed circuit board A (black)

Needle threader motor (black)

Needle threader motor detection switch (top)(blue)

Buttonhole sensor (white)

Thread cutter sensor (black)

Zigzag width motor (black)

Thread tension motor (gray)

Replacing Printed Circuit Board A

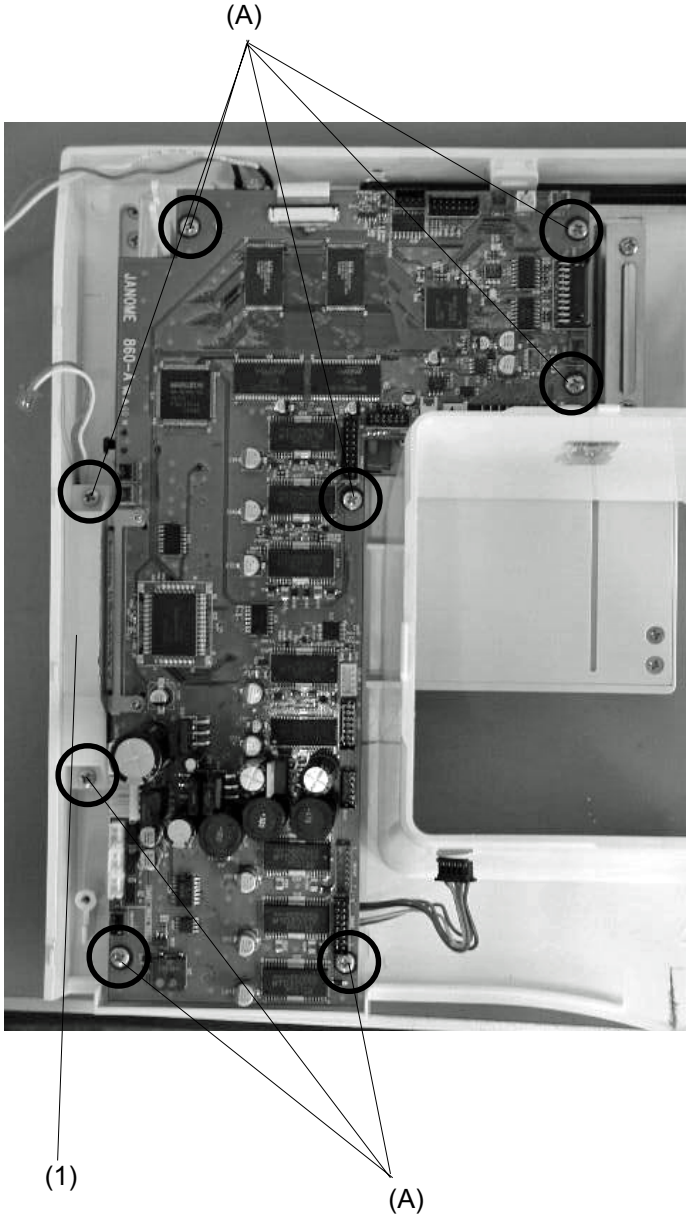

To remove:

1. Remove the front cover.
2. Disconnect each connector from printed circuit board A.
3. Remove the 8 screws (A) and remove printed circuit board A with the card guide (1).

To remove:

4. Follow the above procedure in reverse.

Replacing Printed Circuit Boards F1, F2 and Slide Volume

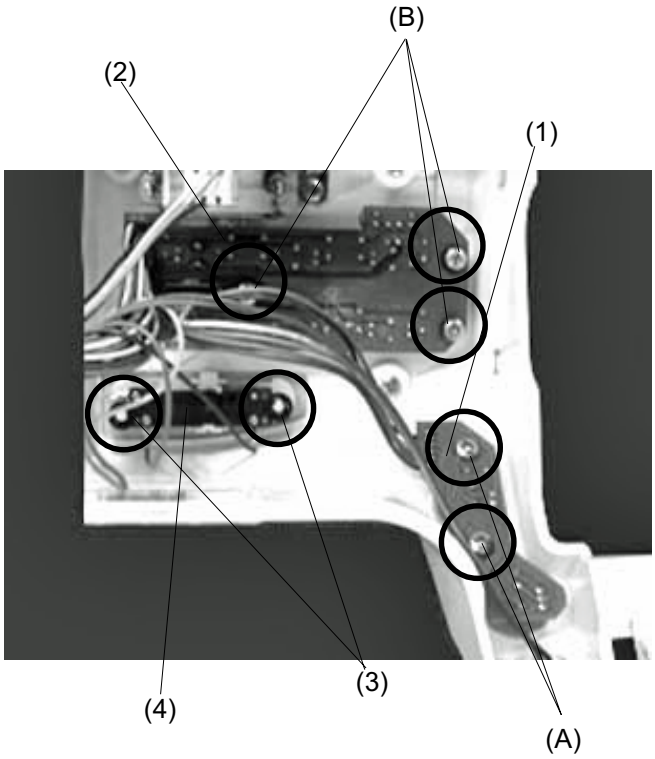

Printed circuit board F1

To remove:

1. Remove the front cover.
2. Pull out the connector from printed circuit board A.
3. Remove the 2 screws (A) and remove printed circuit board F1 (1).

To attach:

4. Follow the above procedure in reverse.

Printed circuit board F2

To remove:

1. Remove the front cover.
2. Pull out the connector from printed circuit board A.
3. Remove the 3 screws (B) and remove printed circuit board F2 (2).

To attach:

4. Follow the above procedure in reverse.

Slide volume

To remove:

1. Remove the front cover.
2. Pull out the slide volume connector from printed circuit board A.
3. Remove the 2 CS rings (3) and remove the slide volume (4).

To attach:

4. Follow the above procedure in reverse.

Replacing Printed Circuit Board B

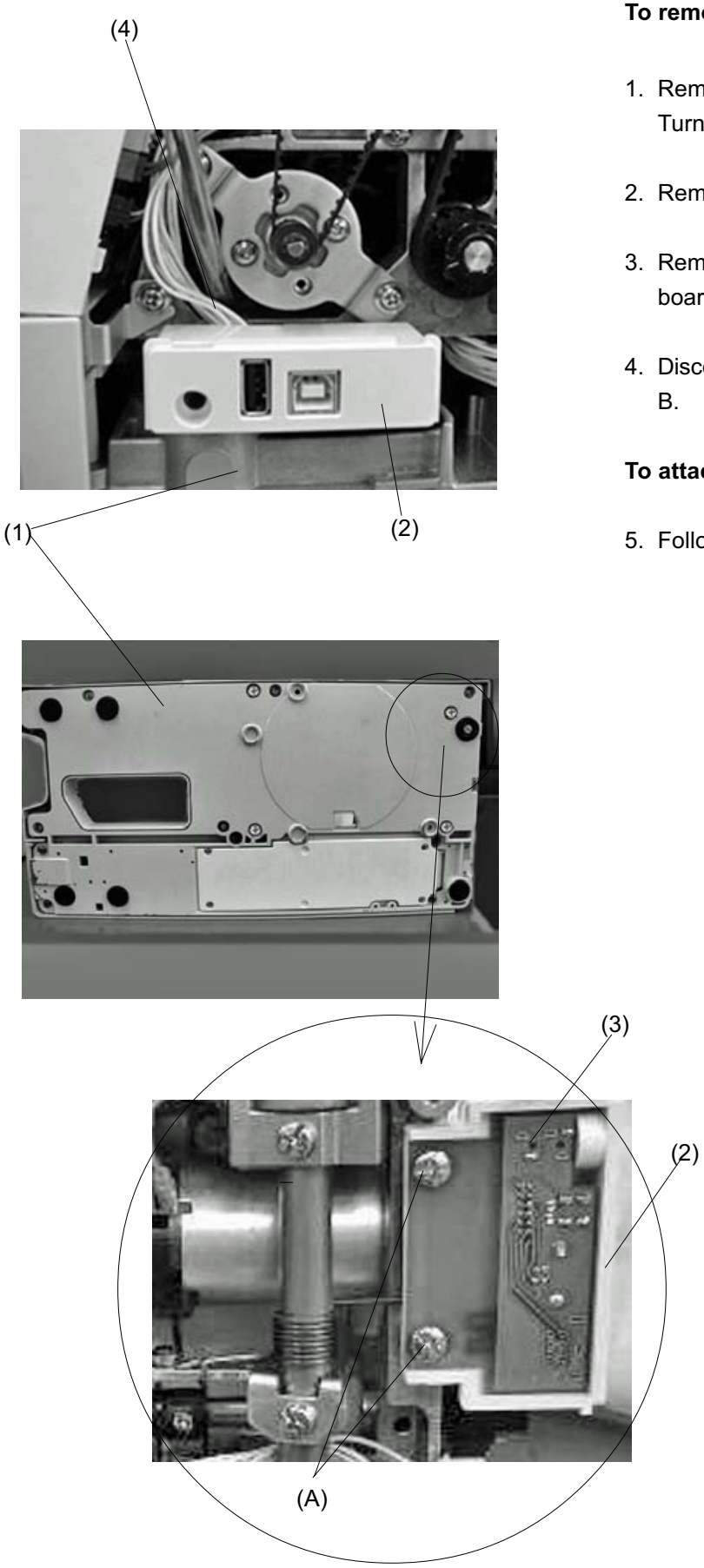

To remove:

1. Remove the belt cover.
   Turn the machine to the back.

2. Remove the base (1).

3. Remove the 2 screws (A) and remove printed circuit board B case (2) and circuit board B (3).

4. Disconnect the herness (4) from printed circuit board B.

To attach:

5. Follow the above procedure in reverse.

Replacing Switching Power Supply

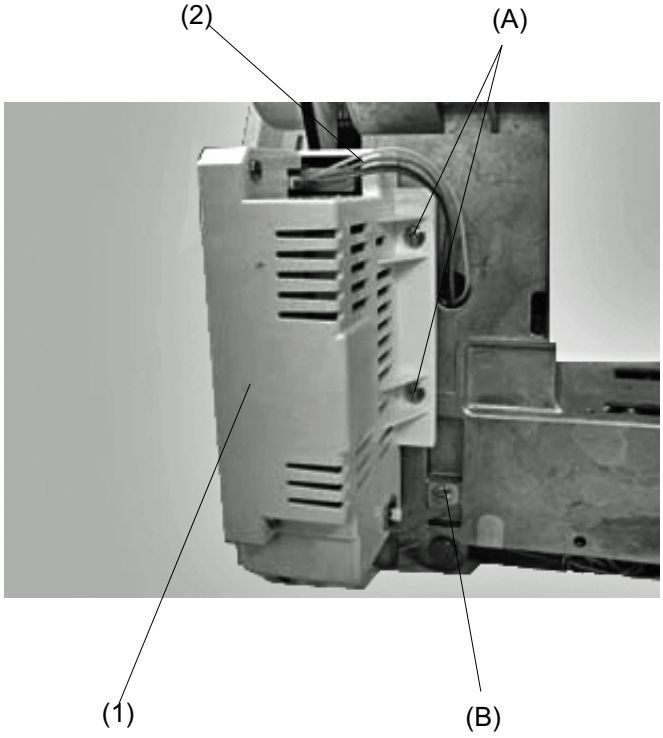

To remove:

1. Remove the top cover, belt cover, base, and rear cover.

2. Remove the screws (A) and (B), and remove the switching power supply (1).

3. Disconnect harness (2) from the switching power supply.

To attach:

4. Follow the above procedure in reverse.

Replacing DC Motor and Adjusting Motor Belt Tension

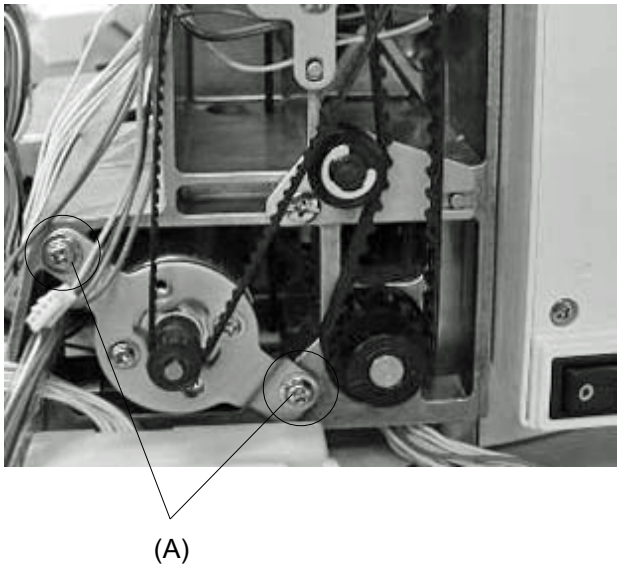

Replacing DC Motor

To remove:

1. Remove the belt cover.
2. Remove the motor belt.
3. Disconnect the motor connector from printed circuit board A.
4. Remove the 2 screws (A) and replace the motor.

To attach:

5. Follow the above procedure in reverse.

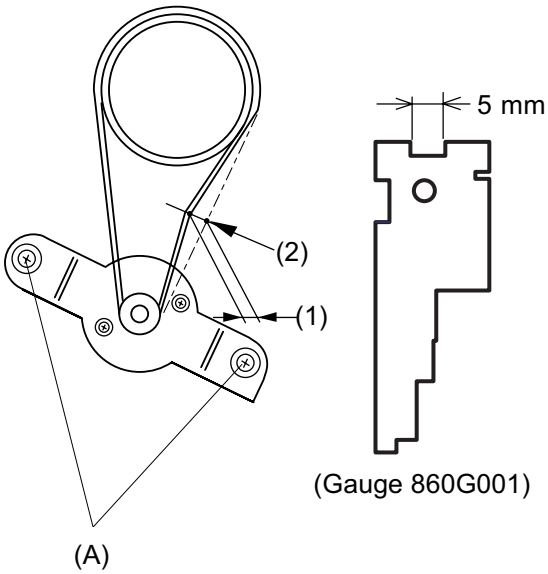

Adjusting motor belt tension

1. Tighten the 2 screws (A) slightly.
2. Adjust the slack in the motor belt to about 5.0 mm (1) by pressing the middle of the motor belt in with your finger with 200 grams of pressure (2).
3. Tighten the screws (A) securely.
4. Attach the belt cover.

Adjusting Needle Drop Position

When the straight stitch is selected on the touch panel, the needle should be positioned in the center of the needle plate hole.
When the zigzag stitch is selected with the zigzag width set to the maximum (7.0), the clearance between the side of the needle and the edge of the hole of the needle plate at the left and right needle position should be 0.2 mm or more.

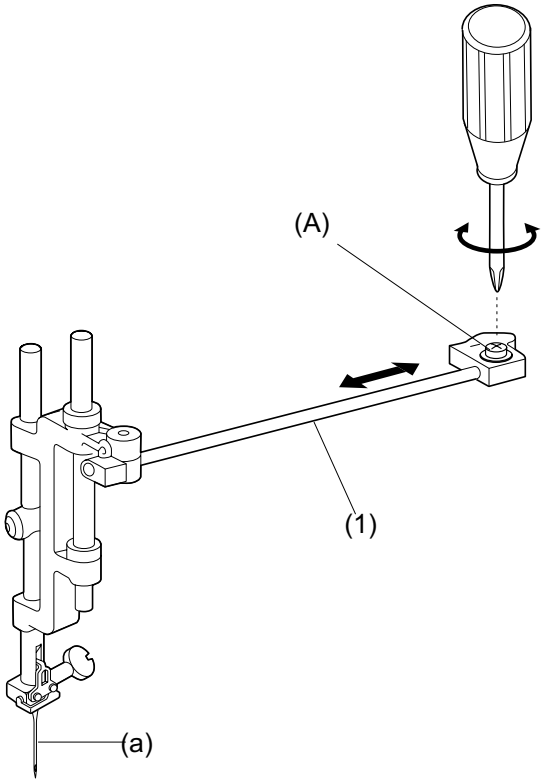

1. Remove the top cover and slect stitch No. 1 (straight stitch).
   Lower the needle to its lowest position by turning the handwheel toward you.

2. Loosen the screw (A).
   Move the zigzag rod (1) left or right to set the needle (a) in the center of the hole of the needle plate (3), then tighten screw (A).

3. Select stitch No. 8 (zigzag).
   Set the zigzag width to the maximum (7.0).

4. Turn the handwheel toward you to check if the clearance between the side of the needle and the edge of the hole of the needle plate (3), at both left and right needle positions, is 0.2 mm or more (4).

5. Attach the top cover.

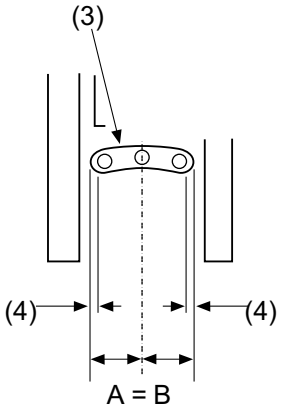

Adjusting Hook Timing

When stitch No. 2 is selected, the amount the needle bar travel from its lowest position to the position where the tip of the rotary hook exactly meets the right side of the needle should be 3.25 to 3.55 mm.

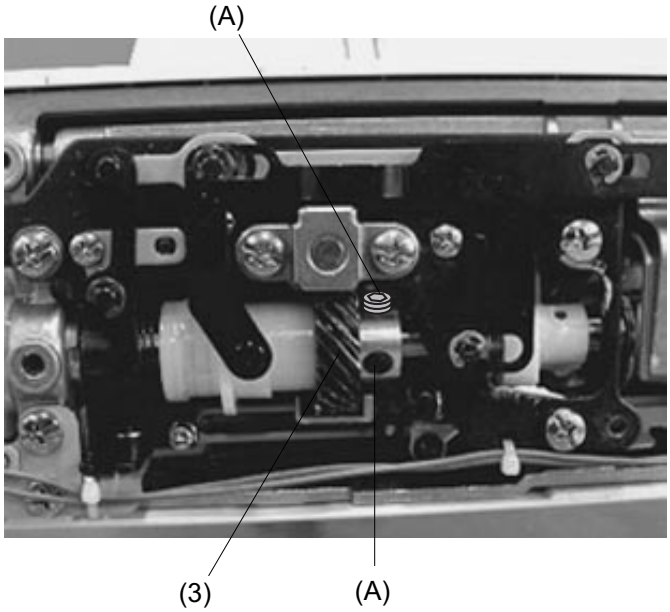

1. Remove the presser foot, needle plate and bobbin holder.
2. Remove the extension table and bed cover.
3. Turn the power switch on and select stitch No. 2.
4. Press the ADJUST key and set the zigzag width to 0 by manual adjustment, then turn the power switch off.
5. Lower the needle (6) to its lowest position (1) by turning the handwheel toward you.
6. In this situation, make sure that the convex of the feed lifting cam is right under the cam as shown (2). Loosen the 2 screws (A) of the lower shaft gear (3).
7. Raise the needle bar further 3.4 mm (4) from the lowest position (1).
8. Turn the lower shaft gear (3) until the tip of the rotary hook meets with the right side of the needle (5). Tighten the 2 screws (A) of the lower shaft gear (3).
9. Attach the bobbin holder, needle plate and presser foot.
10. Attach the bed cover and extension table.

[Alternative way of adjustment]

Before proceeding this adjustment, check the needle bar height applying the [Alternative way of adjustment] (see page 19).

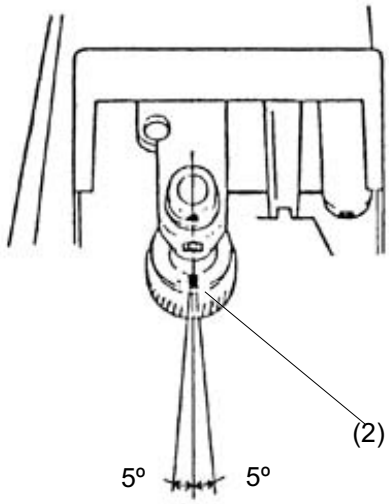

1. Remove the presser foot, needle plate and bobbin holder.
2. Remove the extension table and bed cover.
3. Turn the power switch on and select the stitch No. 8. Set the zigzag width the maximun at the left needle position.
4. Adjust the hook timing so that the distance between the tip of hook and the top of the needle eye is 1.8 mm when the tip of the hook meets with the right side of the needle as the needle bar travels upward at the left needle position.
5. Attach the bobbin holder, needle plate and presser foot.
6. Attach the bed cover and extension table.

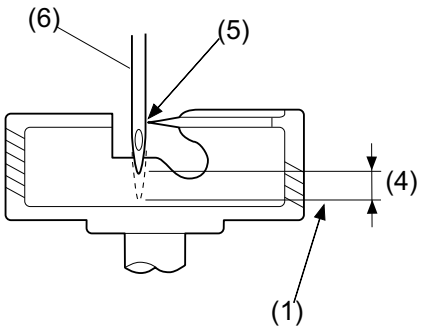

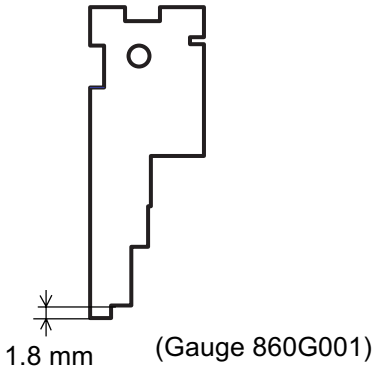

Adjusting Needle Bar Height

The standard distance between the upper edge of the needle eye and the tip of the rotary hook should be in the range of 1.6 - 2.0 mm when the rotary hook meets the right side of the needle as the needle travels up from its lowest position.

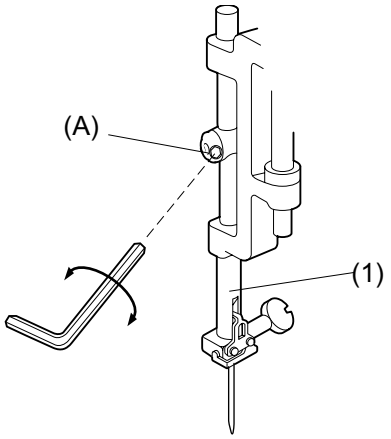

1. Remove the presser foot, needle plate and bobbin holder.

2. Turn the power switch on and select the stitch No. 2.

3. Press ADJUST key and set the zigzag width to 0, then turn the power switch off.

4. Turn the handwheel to raise needle bar (1) from its lowest position until the tip of the rotary hook meets the right side of the needle (2).

5. Open the face cover and loosen screw (A) as shown.

6. Move the needle bar (1) up or down to adjust the needle bar height.

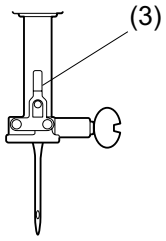

7. Tighten the screw (A). Be sure that the groove (3) on the needle bar is facing exactly forward.

8. Close the face cover.

9. Reattach the bobbin holder, needle plate and presser foot.

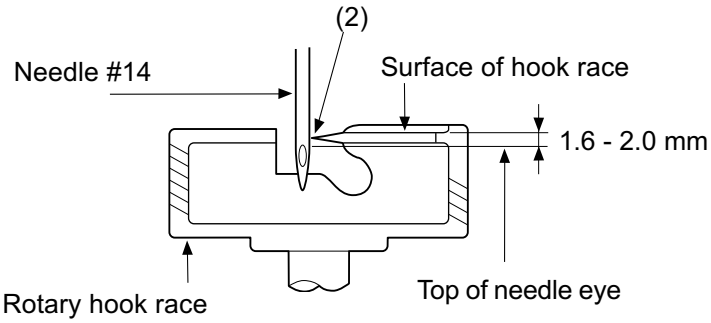

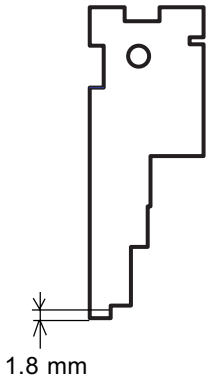

(Gauge 860G001)

[Alternative way of adjustment]

1. Raise the needle to its highest position.
2. In this condition, the distance between the tip of needle and the surface of the needle plate should be 16.3 mm.

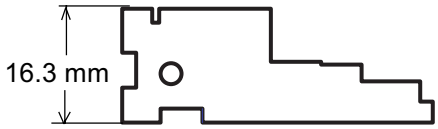

(Gauge 860G001)

Adjusting Clearance between Needle and Hook

The clearance between the needle and rotary hook should be -0.10 to + 0.05 mm.

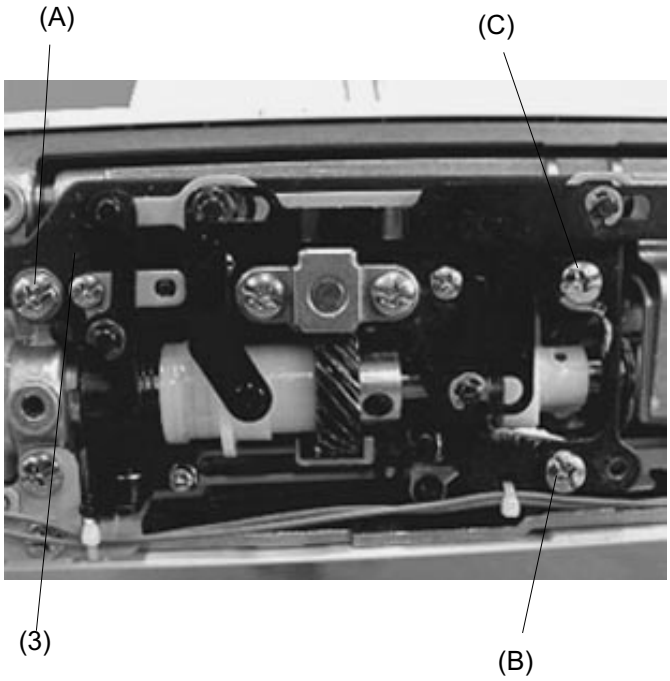

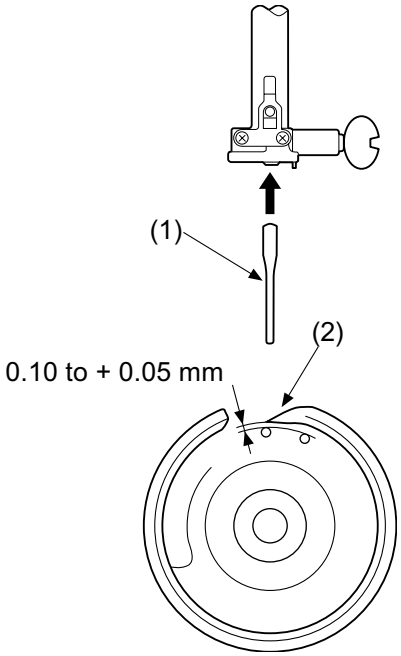

1. Remove the extension plate, needle, needle plate, bobbin holder, and bed cover, and attach the Test pin (1).

2. Turn the power switch on and select stitch No. 8, then set the zigzag width to 7.0 by pressing ADJUST key.

3. Loosen the screws (A), (B) and (C) and tighten the screw (C) slightly.

4. Turn the handwheel toward you and adjust the clearance between the test pin (1) and the tip of rotary hook (2) to - 0.10 to + 0.05 mm by moving the rotary hook set plate (3) up or down.

5. Tighten the screws (A), (B) and (C) firmly.

6. Check the rotary hook driver gear and the lower shaft gear backlash.
   If gears engage tightly or loosely, check the section entitled Adjusting Backlash between Hook Drive and Lower Shaft Gear.

7. Reattach the bed cover, bobbin holder, needle plate, extension table and needle.

Adjusting Backlash between Hook Drive Gear and Lower Shaft Gear

The rotational play of the hook should be 0.8 mm or less when the tip of the rotary hook is within the width of the feed dog as shown below.
Adjust the backlash after adjusting the clearance between the needle and the rotary hook.

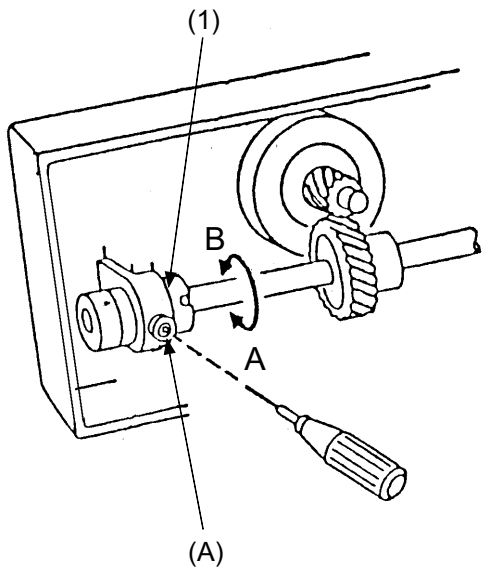

To check:

1. Turn the power switch off.
2. Remove the extension table and bed cover.
3. Loosen the hexagonal socket screw (A).
   Jog the hook race with your fingers to check the rotary play. If the play is larger than 0.8 mm or the gears do not turn smoothly, adjust the backlash as follows.

Adjustment procedure:

1. Turn the lower shaft bushing (1) (eccentric), in the direction of **A** when the play at rotary hook tip is too large.
2. Turn the lower shaft bushing (1) (eccentric), in the direction of **B** when the play at rotary hook tip is too small.
3. Tighten the hexagonal socket screw (A).
4. Reattach the bed cover and extension table.

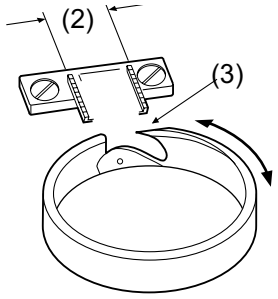

(1) Lower shaft bushing
(2) Play of the rotary hook should be 0.8 mm or less.
(3) Tip of rotary hook

Adjusting Presser Foot Position and Height

When the presser foot is raised, the clearance between the presser foot and the needle plate should be 6.0 mm.
When the presser foot is lowered, the edge of the foot and the feed dog window on the needle plate should be parallel.

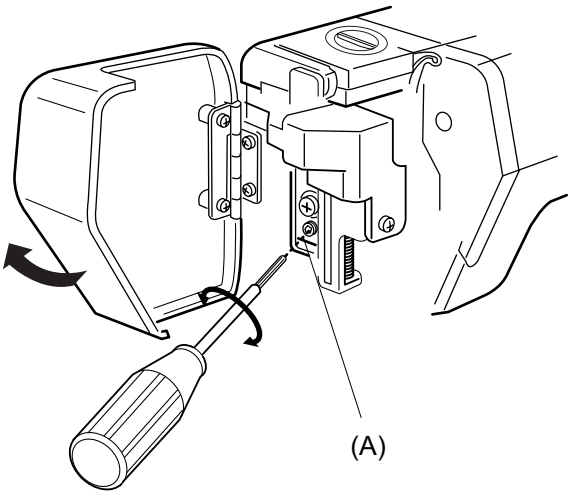

1. Open the face cover.

2. Raise the presser foot, loosen screw (A) to adjust the presser foot position and presser foot height, then re-tighten the screw (A).

3 Close the face cover.

(1) Presser foot
(2) 6.0 mm
(3) Feed dog window
(4) The edge of presser foot (should be parallel with feed dog window.)

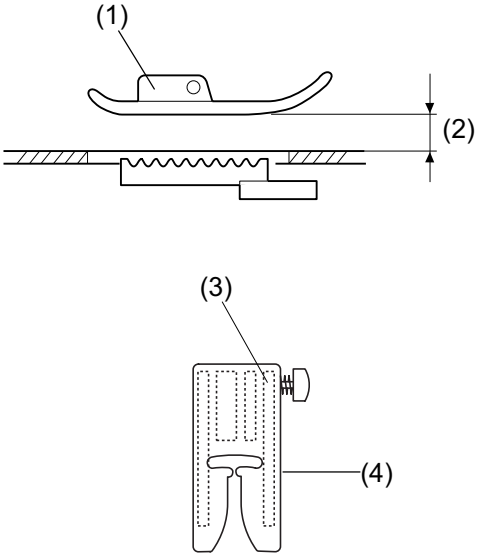

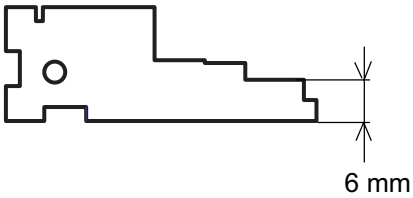

(Gauge 860G001)

Adjusting Feed Dog Height

When the pressure adjusting dial is set at “3” and the presser foot is lowered, the highest position of the feed dog should be 0.80 to 0.90 mm from the surface of the needle plate.

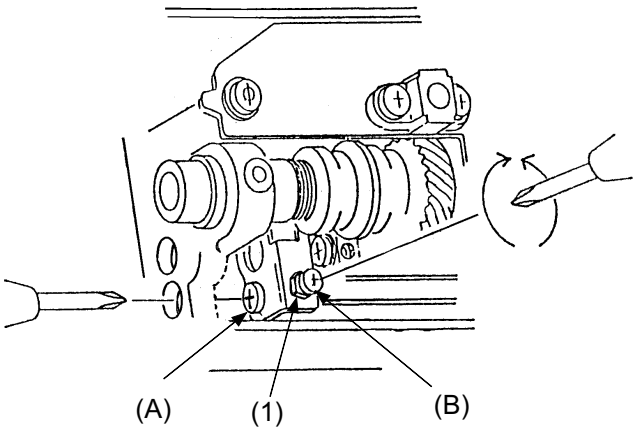

To adjust feed dog height

1. Remove the extension table, bed cover and thread cutter cover.
2. Set the pressure dial at 3 and lower the presser bar lifter, then turn the power switch on.
3. Turn the handwheel toward you until the feed dog comes to its highest position.
4. Loosen the screw (A).
5. Loosen the nut (1) and adjust the feed dog height to 0.8 to 0.90 mm (4) by turning the adjusting screw (B).
6. Tighten the nut (1).
7. Tighten the screw (A).

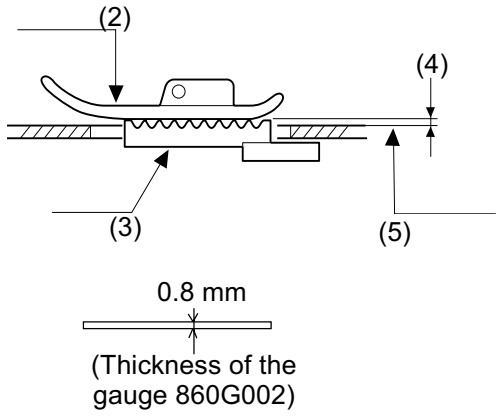

To adjust the feed dog position parallel to needle plate

Turn the handwheel toward you until the feed dog comes to its highest position. The feed dog (3) and the needle plate should be parallel. If not, follow the instructions below.

1. Insert the hexagonal socket screw (C) into the threaded hole (6) and screw it in until the tip of screw reaches the bottom.
2. Loosen the screw (D).
3. Turn the hexagonal socket screw (C, part No. 000111108, 2 mm blade) and adjust the feed dog (3) to be parallel to the needle plate.
4. Tighten the screw (D).
5. Remove the hexagonal socket screw (C).
6. Reattach the thread cutter cover, bed cover and extension table.

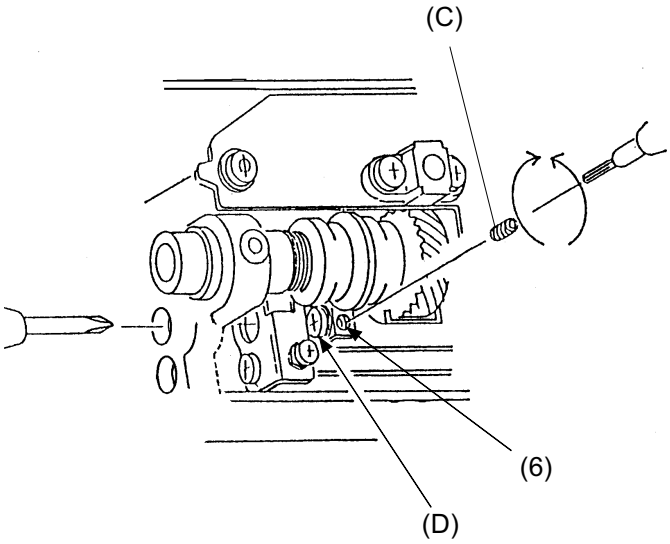

Adjusting Height of Embroidery Foot P

The space between the needle plate and the bottom surface of the foot (P) should be 0.7 to 1.5 mm when the needle bar is at its lowest position.

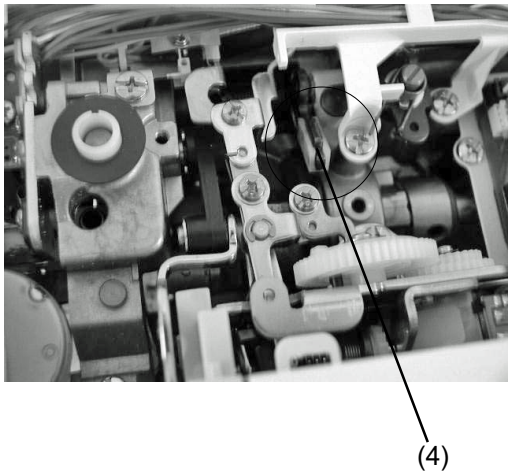

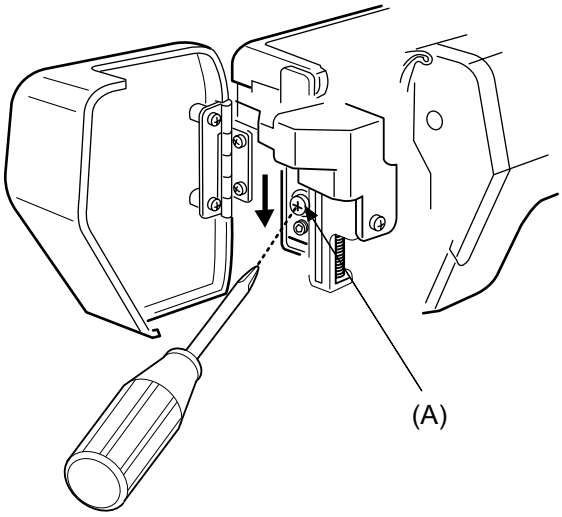

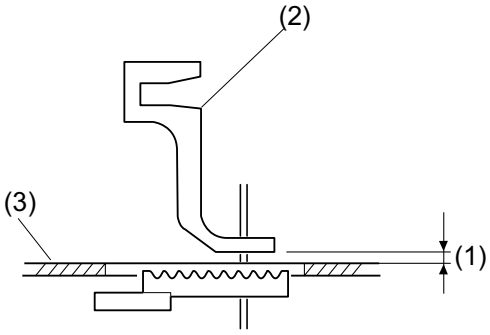

1. Set the pressure dial at 2 and remove the top cover.

2. Lower the needle bar to its lowest position and lower the presser bar lifter.

3. Insert a 0.8 mm thickness gauge (1) between the embroidery foot P (2) and the needle plate (3).

4. While pressing the presser bar actuator (4) down against the upper shaft cam, loosen the screw (A) and push it down in the direction of the arrow, then tighten the screw (A) again.

5. Reattach the top cover.
   (Set the pressure dial at 3.)

NOTE: After this adjustment, Foot sensor adjustment must be performed. (See page 32)

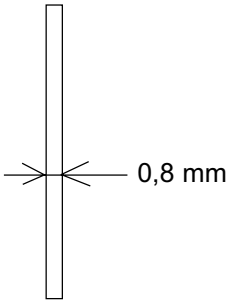

(Thickness of Gauge 860G001)

Adjusting Shield Plate Position

When the machine is set for zigzag stitching, the needle should start to swing 8.3 to 8.7 mm above the surface of the needle plate.

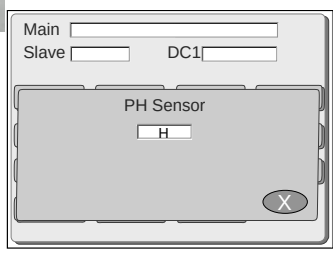

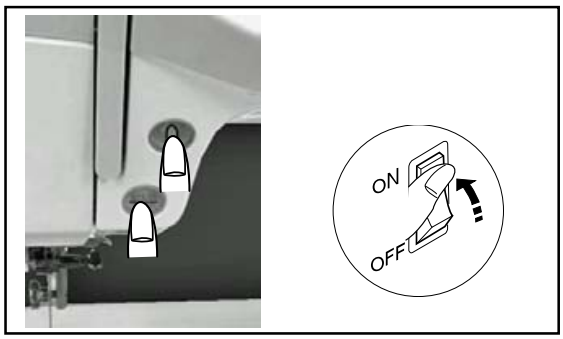

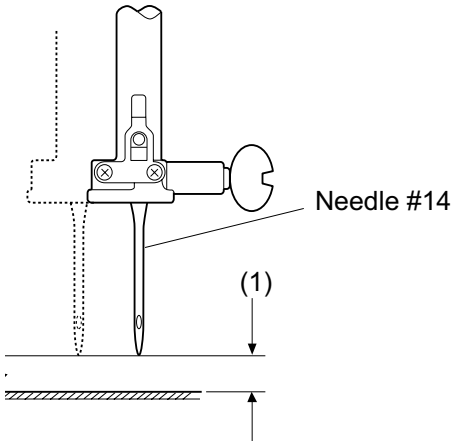

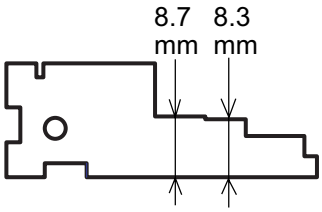

(Gauge 860G001)

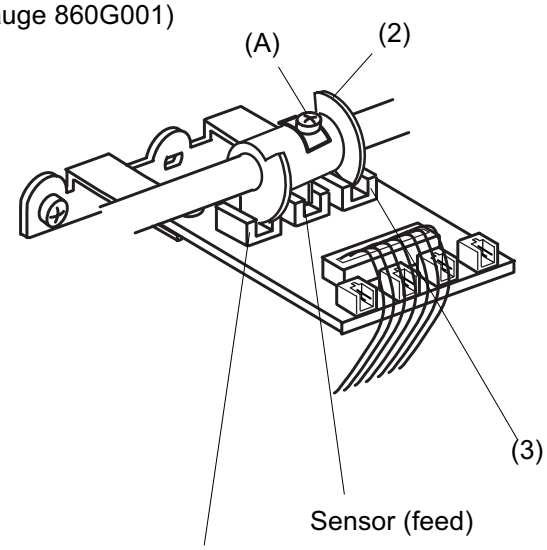

1. Remove the belt cover and base.
2. To set up the machine in Adjust Mode, turn the power switch on while pressing the Start/Stop and reverse buttons. (Keep pressing the button until the LCD shows the adjusting window.)
3. Press PHSensor on the touch panel.
4. Turn the handwheel toward you and raise the needle between 8.3 and 8.7 mm (1) above the surface of the needle plate.
5. Remove the base and loosen the screw (A) of the shield plate (2). Turn the shield plate until the PH sensor signal changes from L to H, and tighten the screw (A).
6. Position the right face of the shield plate (3) in the center of slit of the sensor and tighten screw (A).
7. Reattach the base and belt cover.

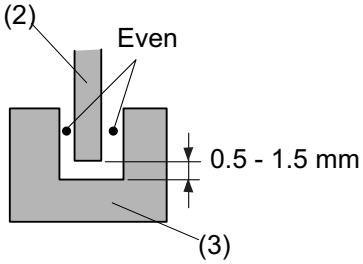

Adjusting Tension Release Mechanism

When the presser foot lifter is raised, the tension release mechanism should work correctly. If not, adjust as follows.

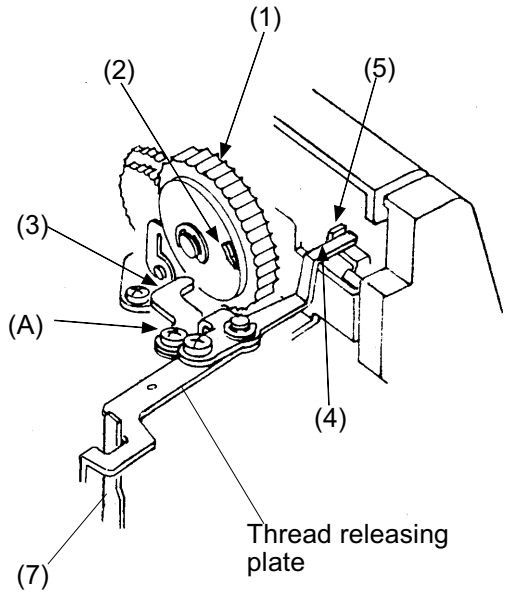

Adjusting tension release claw

1. Remove the top cover unit.

2. Lower the presser foot and turn the thread tension dial (1) until the convex part (2) of the tension dial is aligned with the tension release claw (3).
   In this condition, loosen the screw (A) and adjust the tension release adjusting plate (4) to touch the tension disc supporter (5) .
   The tension discs should be opened slightly.

3. Tighten the screw (A).

Adjusting the thread releasing plate

4. Lower the presser foot, turn the thread tension dial until the flat surface part touches the releasing claw (3).

5. Loosen the screw (B).

6. Set the thread releasing lever (7) so that it touches the thread release plate (5) slightly and tighten the screw (B).

7. When the presser foot is raised, the tension discs should be opened.

Note: The clearance between the tension disc supporter and the thread releasing plate should be 0.5 to 1.0 mm (8) when the presser foot is lowered.

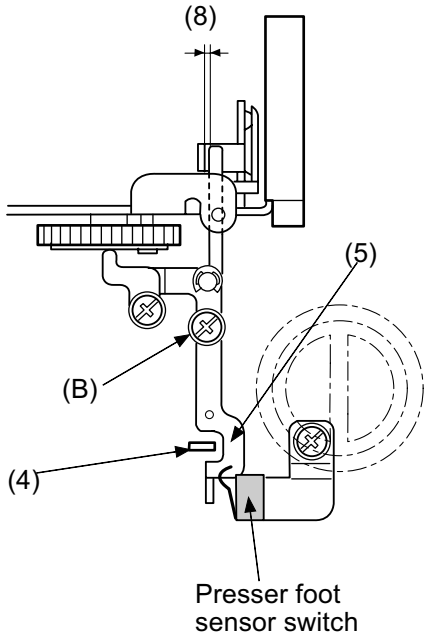

Adjusting Needle Thread Tension

The standard upper thread tension should be 59 to 67 grams when the machine is set for stitch No.1 and the tension dial is set at AUTO, measured with a #50 polyester thread being pulled at approximately 110 mm/s in the direction of the arrow.

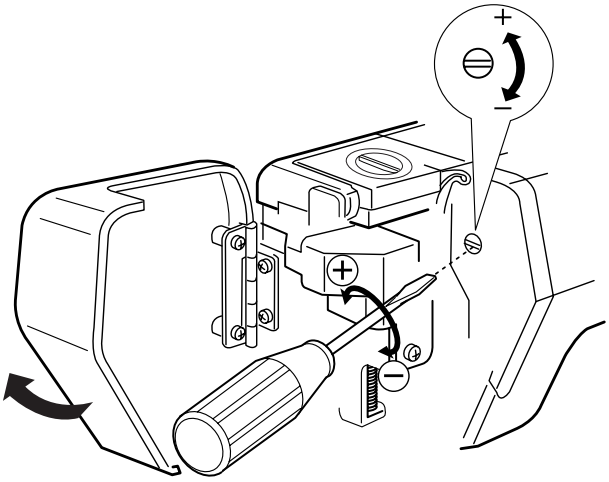

1. Turn the power switch on and select the stitch No. 1. Press the needle up/down button twice.

2. Set the thread tension to 3.4 by pressing the ADJUST key.

3. Lower the presser foot.

4. Open the face cover and adjust the thread tension.

   (A) If the thread tension is less than 59 g, turn the screw in the direction of “-”.
   (B) If the thread tension is more than 67 g, turn the screw in the direction of “+”.

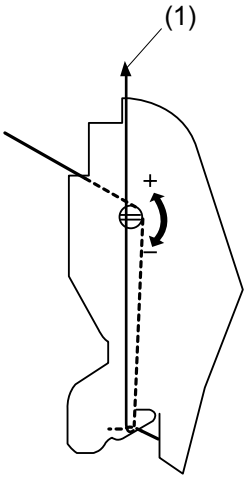

Replacing and Adjusting Threader Plate

If the hook on the threader plate is damaged, replace it as follows.

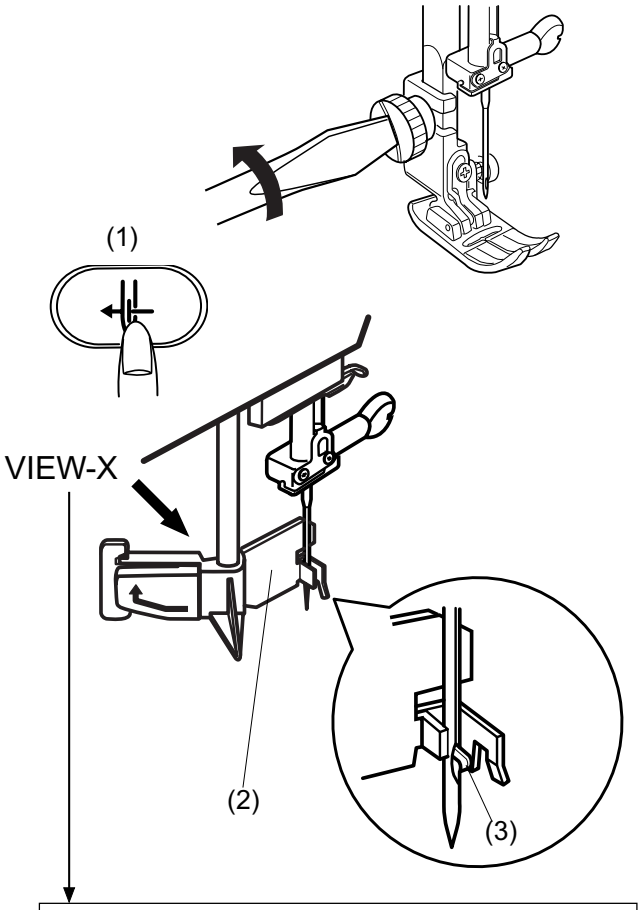

To replace:

1. Remove the foot holder.
2. Turn the power switch on. Raise the needle by pressing the needle up/down button.
3. Lower the threader by pushing the threader button (1).
4. Turn power switch off.
5. Loosen the 2 screws (A) and replace the threader plate (2).

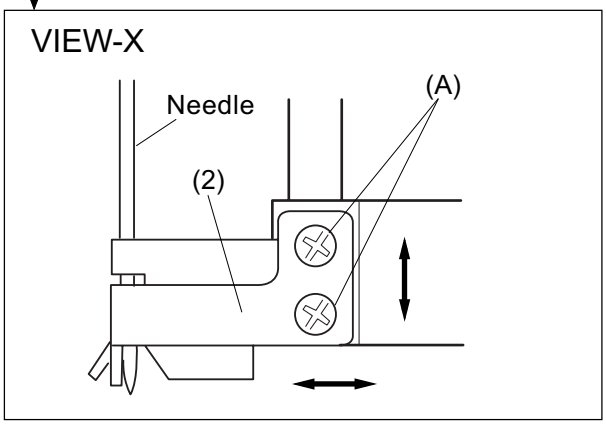

To adjust:

1. If threader hook (3) thrusts or hits against either the left or right edge of the needle eye: Loosen the 2 screws (A) and adjust the position of the threader plate (2).

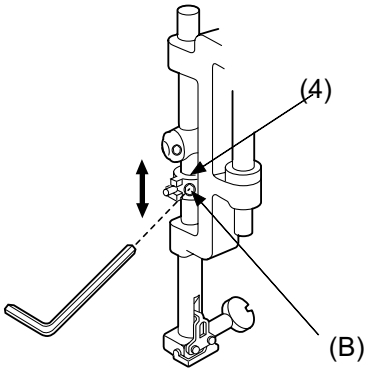

2. If the threader hook (3) thrusts against either the top or bottom edge of the needle eye, or misses the needle eye, open the face cover and loosen the screw (B). Move the threader position adjusting holder (4) up or down to adjust the hook position.

Adjusting Needle Threader Switch

Adjust the upper switch position as follows if the instructional display will not disappear.

1. Remove the 2 screws (A) and remove the motor cover (1).

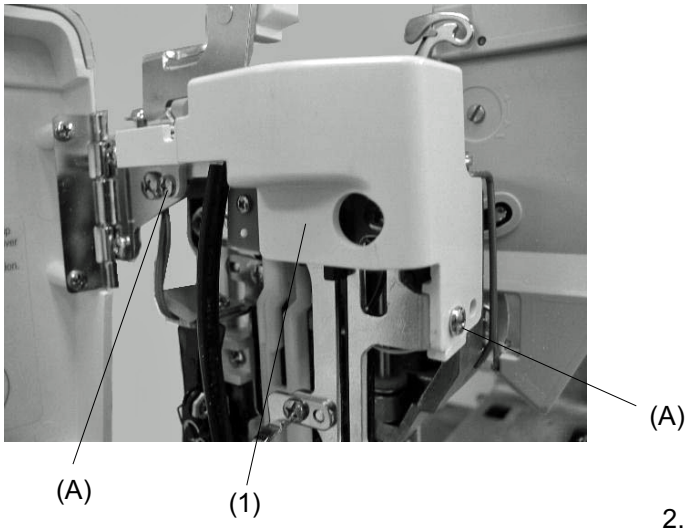

2. Loosen the screw (B) and adjust the position of the switch (2) by moving it up or down so that the needle threader stops with a 3 mm gap (3) between the slider (4) and the top end of the guide slot.

3. Attach the motor cover with the 2 screws (A).

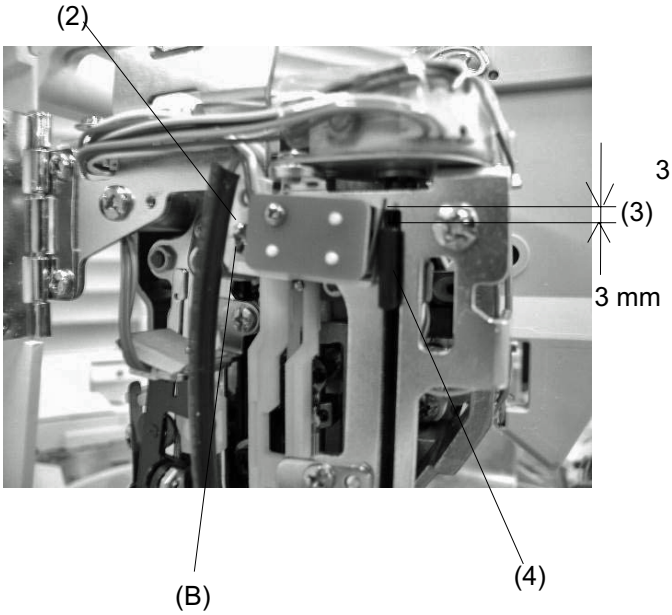

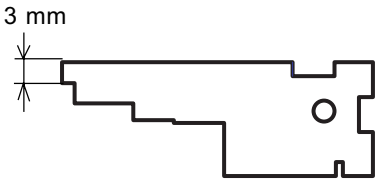

(Gauge 860G001)

TTP Adjusting Mode

If a different stitch appears on the touch panel from the one pressed when selecting a desired stitch, follow the instructions below.

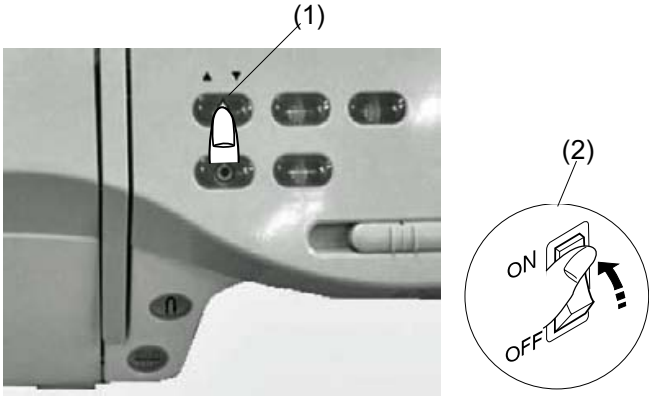

To adjust touch panel:

1. While pressing the Needle Up/Down button (1),turn the power switch on. (Keep pressing the Needle Up/ Down button until “PRESS + MARK” and “+” appear.)

   (1) Needle Up/Down button
   (2) Power switch
   (3) Touch panel

2. Press the “+” mark with astylus or the tip of the additional spool pin.
   (Press 1 to 5 in order.)

3. When you press the fifth “+”, “ADJUSTMENT END” will appear on the touch panel.

4. Turn the power switch off. Turn the power switch back on again and check the touch panel.

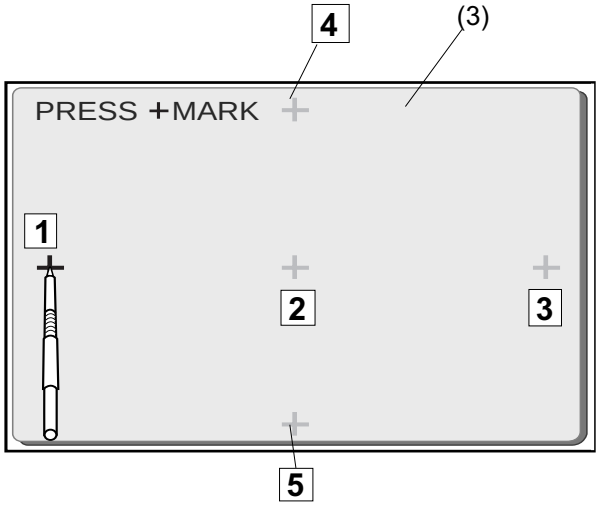

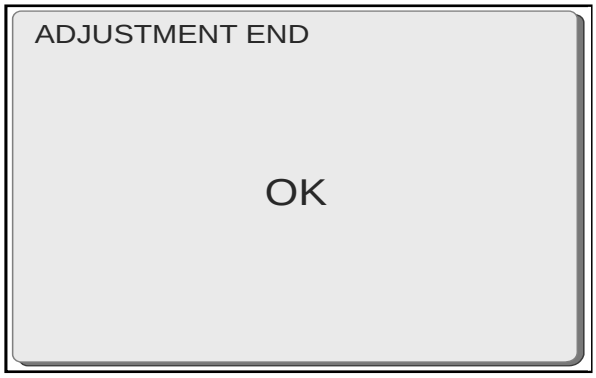

Adjusting Stretch Stitch Balance

When a stretch stitch is sewn with the feed balancing dial (1) set at the standard setting mark ì2î, the length should be as indicated with the "◯" mark in the following figure.
If not (if the forward feeding and backward feeding are out of balance), make an adjustment as follows:

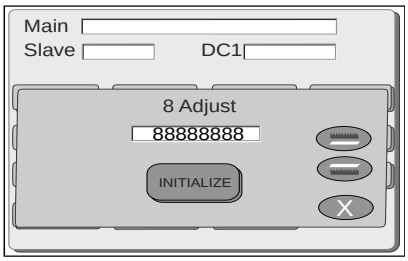

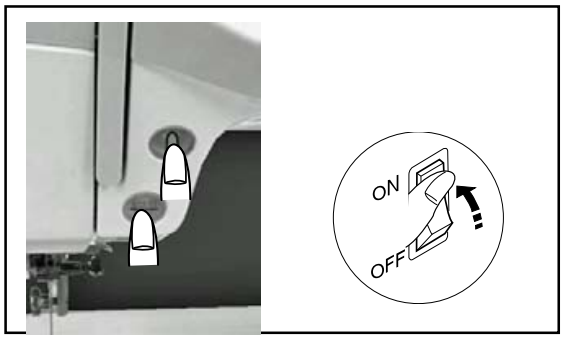

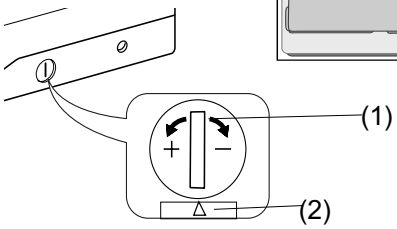

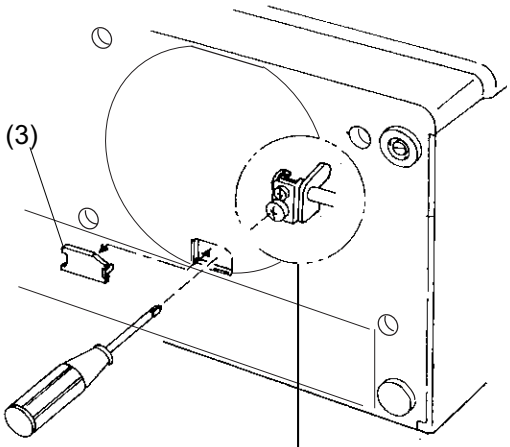

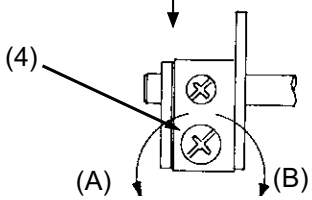

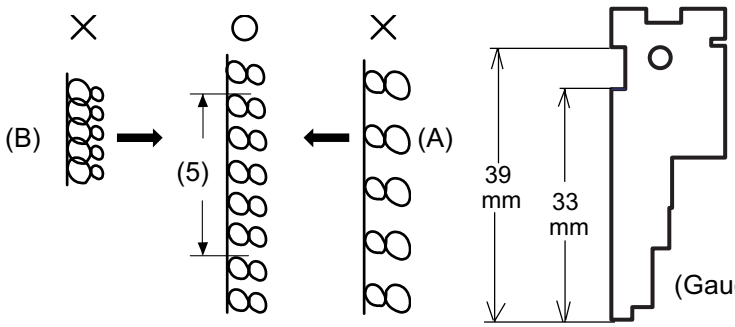

1. Set up the machine in Adjust Mode. Turn the power switch on while pressing the Start/Stop button and the reverse button at the same tiem. (Keep pressing the both buttons until the LCD screen shows the adjusting window.)
2. Press the 8 Adjust key on the touch panel.
3. Set the feed balancing dial (1) at the standard setting mark "△" (2).
4. Check the sewing results.
   (The standard length of the consecutive eights is 34 mm (5).
5. Remove the base lid.
6. If the length of the stitch is longer than the standard length, turn the adjusting screw (4) in the direction of A.
   If the length of the stitch is shorter than the standard length, turn the adjusting screw (4) in the direction of B.
7. Check the sewing results.
8. Press the X key and turn the power off.
9. Reattach the base lid (3).

(1) Feed adjusting dial
(2) Setting mark
(3) Base lid (3)
(4) Adjusting screw
(5) Lenght of five eigths (should be 31 to 37 mm)

(Gauge 860G001)

Adjusting Presser Foot Lifter Sensor

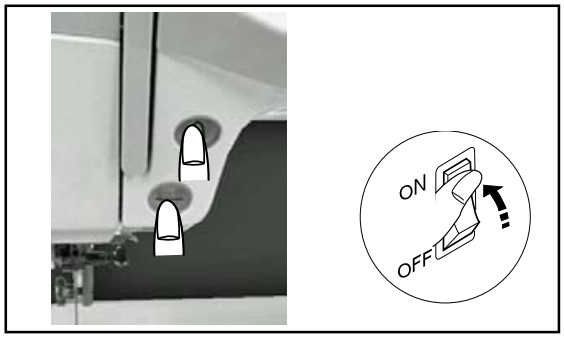

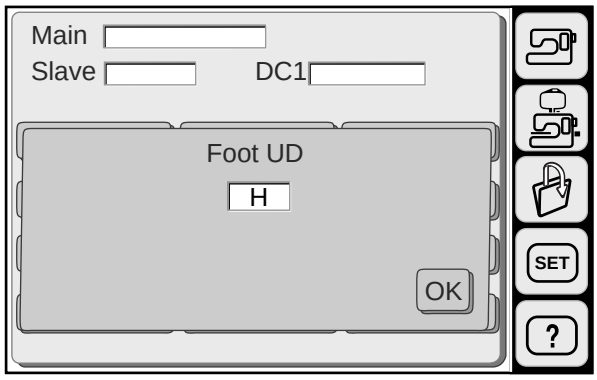

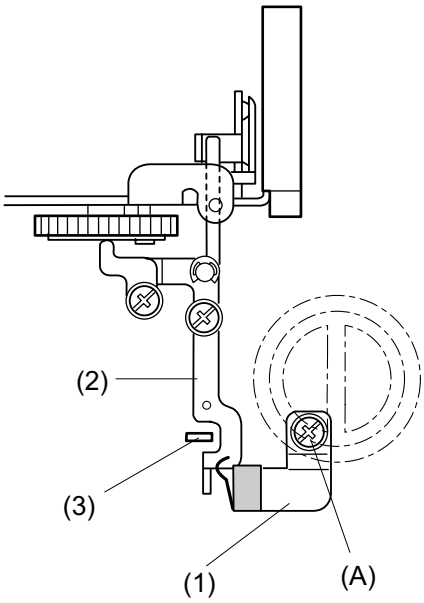

To adjust the presser foot sensor

1. Set up the machine in Adjust Mode. Turn the power switch on while pressing the Start/Stop button and the reverse button at the same time. (Keep pressing both buttons until LCD screen shows the adjusting window.)

2. Press the Foot UD key on the touch panel.

3. Remove the top cover.

4. Loosen the screw (A) and adjust switch fixing plate (1) so that the screen shows “H” when the presser foot is raised and screen shows “L” when the presser foot is lowered, then tighten the screw (A).

5 Press the X key and turn the power switch off.

6 Attach the top cover.

* Turn the power switch on and check if the sensor works properly when the stitch No.16 is selected.

Adjusting Buttonhole Lever

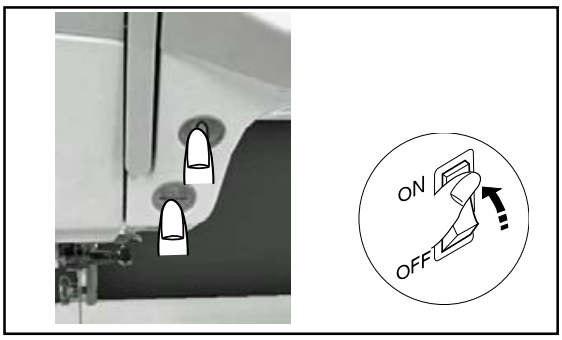

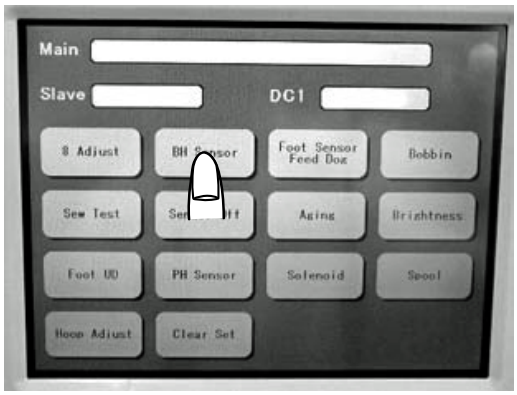

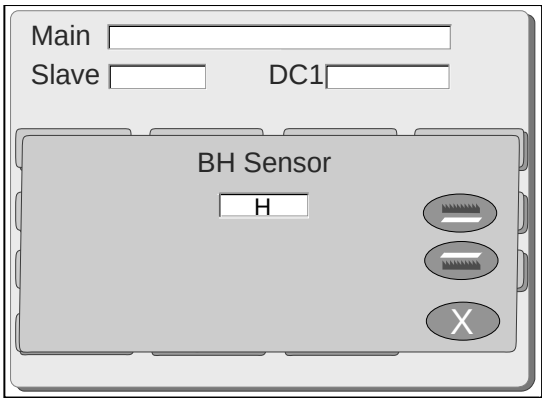

To adjust buttonhole lever:

1. Start up the machine in Adjust Mode. Turn the power switch on while pressing the Start/Stop button and the reverse button at the same time. (Keep pressing both buttons until the LCD screen shows the adjusting window.)

2. Press the BH Sensor key on the touch panel.

3. Loosen screw (A) and move the buttonhole lever guide (1), so that the screen shows “L” when the buttonhole lever (2) is lowered. Then tighten screw (A).

4. Attach the BH foot (R) and lower the BH lever (2).

5. Insert a 1.6 mm thickness gauge (3) between the slider and the spring holder to set the space at 1.6 mm.

6. Loosen the screw (B) until the touch panel shows “H”.

7. Twist the screw in until the screen indication changes from “H” to “L”.

8. Press the X key and turn the power switch off.

(1) Buttonhole lever guide
(2) Buttonhole lever
(3) Clearance (should be 1.6 mm)

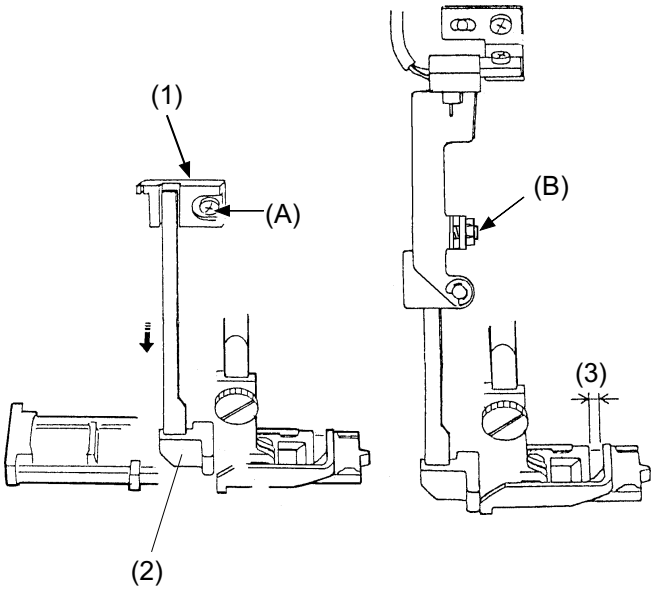

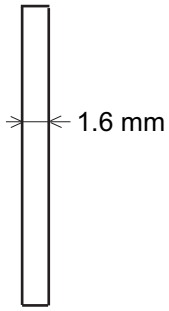

(Thickness of the Gauge 860G002)

Adjusting Presser Foot Sensor

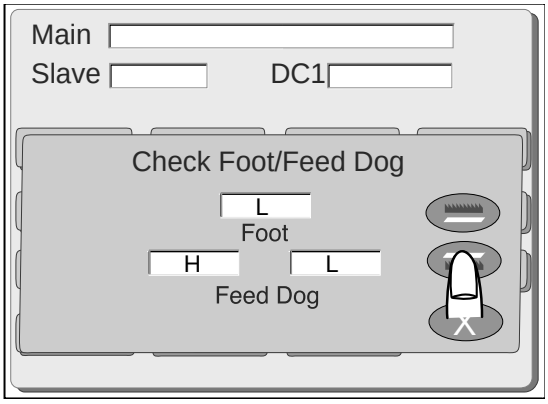

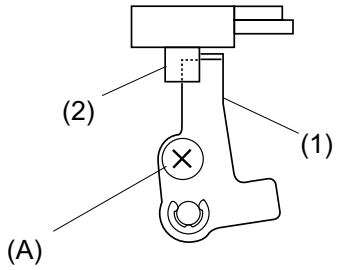

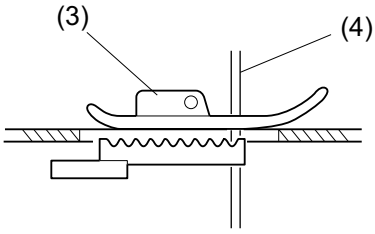

To adjust foot sensor position

1. Set up the machine in Adjust Mode. Turn the power witch on while pressing the Start/Stop button and the reverse button at the same time. (Keep pressing both buttons until LCD screen shows the adjusting window.)
2. Press the Foot Sensor key on the touch panel.
3. Attach the zigzag foot (3), set the pressure dial at “3” and lower the feed dog and the presser foot.
4. Lower the needle bar to the lowest position.
5. Loosen the foot sensor shield plate screw (A).
6. Move the foot sensor shield plate (1) to the left-most position until it touches the sensor (2) lightly. (“L” will appear on the touch panel.)
7. Remove the zigzag foot (3) and lower the presser bar. (H will appear on the touch panel.)

To check:

8. Set the pressure dial at 2.

9. Change the foot to embroidery foot P and slowly lower the embroidery foot P.

10. Turn the handwheel to raise the needle bar to its highest position.

11. While slightly moving the foot sensor shield plate (1) within its range of play, check the indication on the touch panel.

    If the screen shows “H”, the foot sensor is properly adjusted. Press the X key and turn the power switch off.
    If the screen shows “L”, readjust the height of embroidery foot P and proceed with the adjusting steps again from step 1 to 7.

Adjusting Remaining Bobbin Thread Sensor

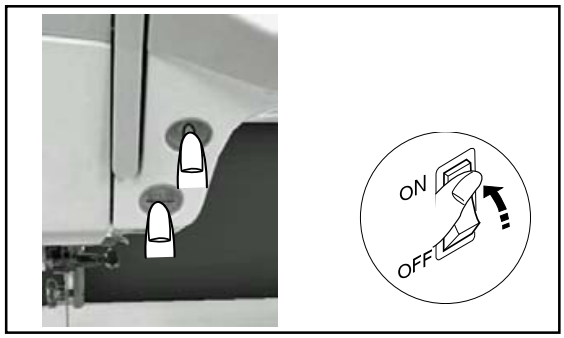

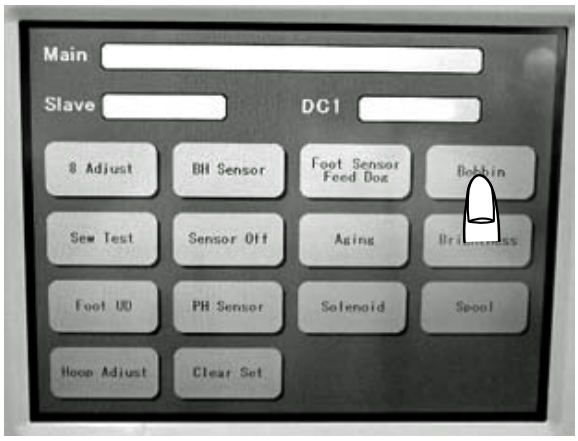

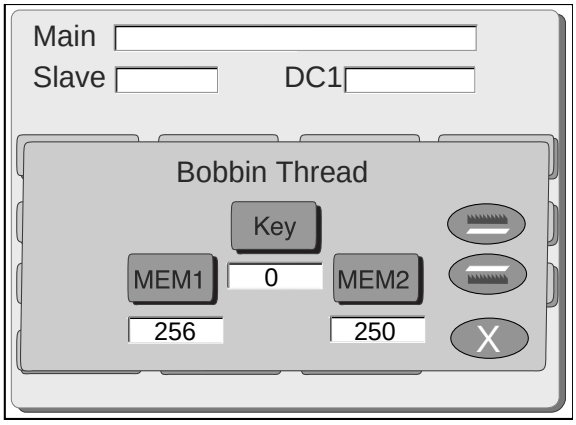

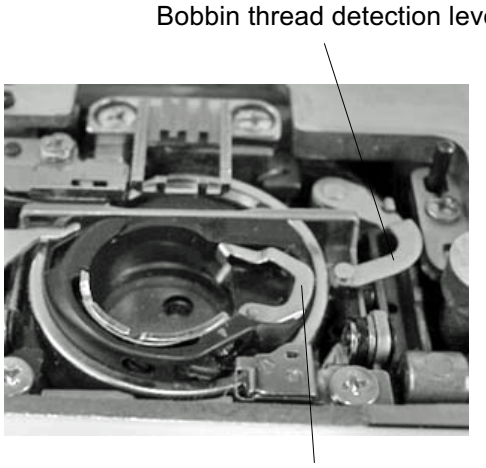

To adjust buttonhole lever:

1. Set up the machine in Adjust Mode. Turn the power switch on while pressing the Start/Stop button and the reverse button at the same time. (Keep pressing both buttons until LCD screen shows adjusting window.)

2. Press the Bobbin key on the touch panel.

3. Insert the 9.2 mm diameter gauge (or wound-see below) bobbin into the bobbin holder and press the Key button. (A number will appear under the Key button.
   Press the Key button several times and check if the same number appears each time.)

4. Press the MEM1 button.
   (The data for step 3 should be registered in MEM1.)

5. Insert the 10.3 mm diameter gauge (or wound-see below) bobbin into the bobbin holder and press the Key button.
   (A number will appear under the ìKeyî button.
   Press the ìKeyî button several times and check if the same number appears each time.)

6. Press the MEM2 button. (The data for step 5 should be registered in MEM2.)

7. Make sure the difference in the values for MEM1 and MEM2 is 4 or more. (The mean of MEM1 and MEM2 will be the standard data.)

8. Press the OK button.

9. Turn the power switch off.
   (Use the gauge 860G002 to make gauge bobbins wound to the proper respective diameters.)

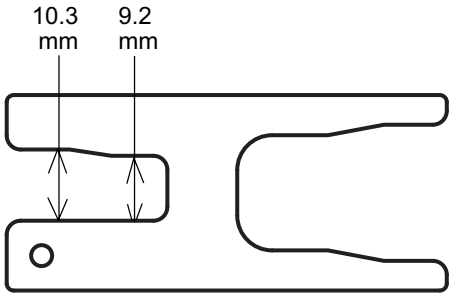

(Gauge 860G002)

Adjusting Thread Cutter Solenoid

The space between the plunger and the upper surface of the yoke should be 5 mm when the plunger is operated.

1. Remove the belt cover and base.
2. Loosen the 2 screws (A) and move the set plate (1) up or down to make the space between the snap ring (2) of the plunger and the upper surface (3) of the yoke 5 mm.
3. Tighten the screws (A).
4. Attach the base and belt cover.

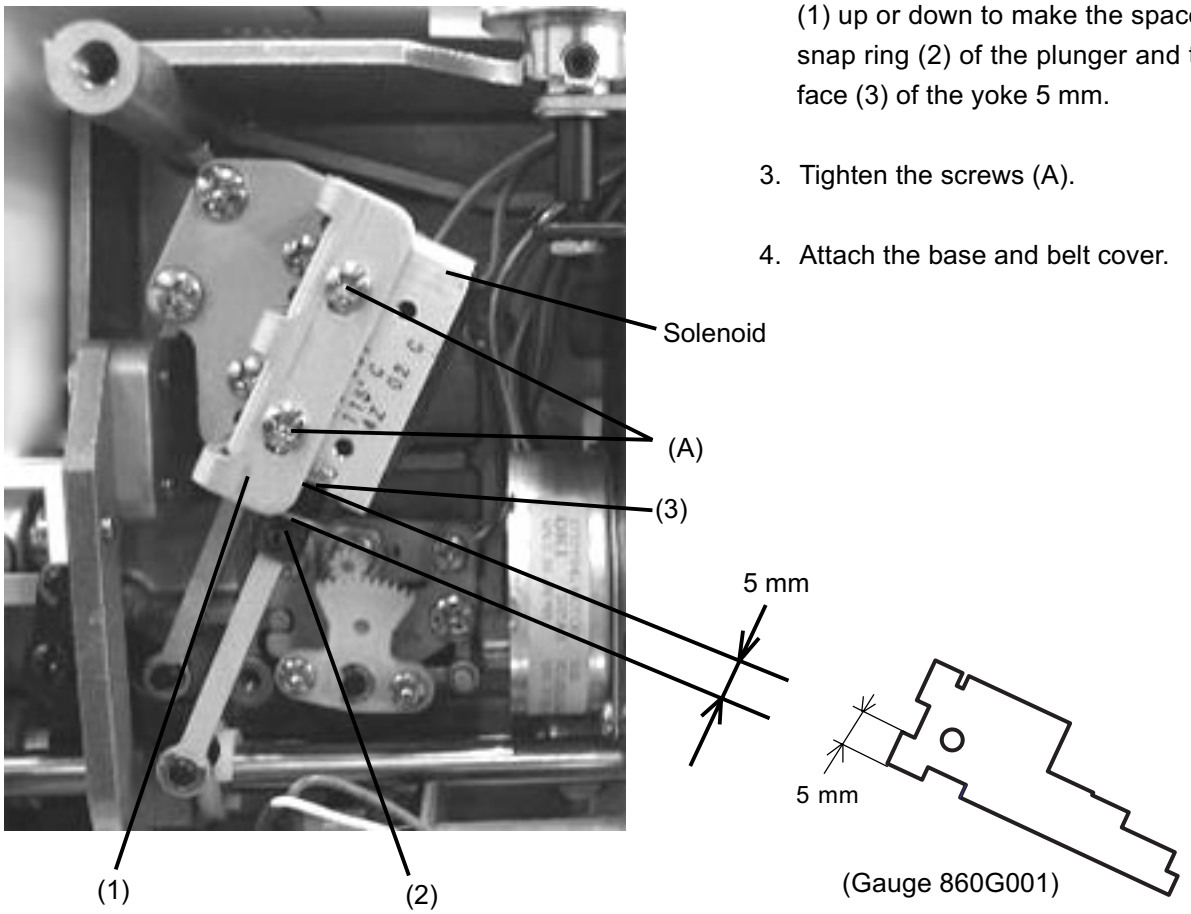

Adjusting Upper Shaft Clutch Solenoid

The space between the plunger and the upper surface of the yoke should be 5 mm.

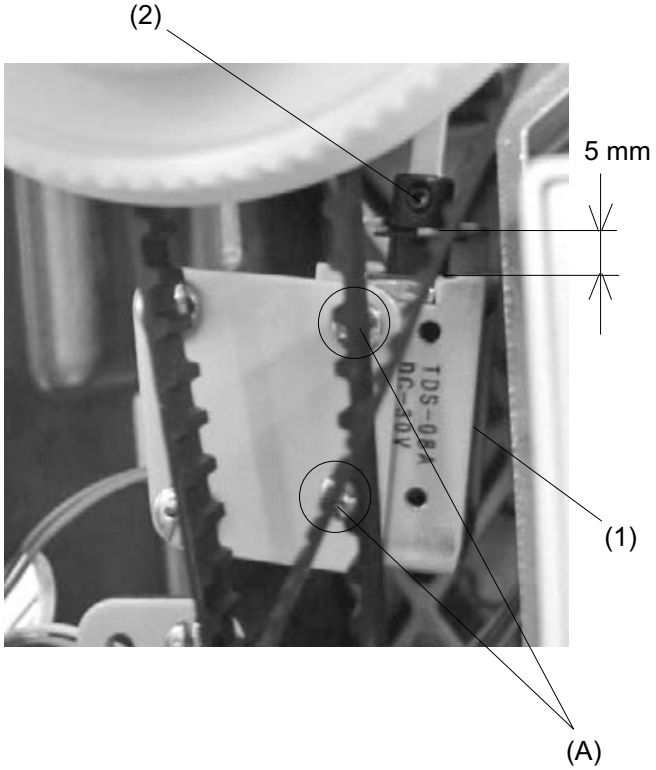

To adjust:

1. Remove the belt cover.
2. Loosen the 2 screws (A) and move the yoke (1) up or down to make a space of 5 mm between the snap ring (2) of the plunger and the upper surface of the yoke.
3. Tighten the screws (A).
4. Attach the belt cover.

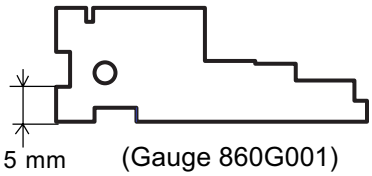

Adjusting Thread Cutter Switch

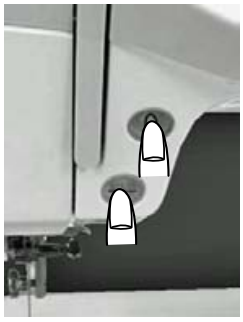

1. Start the machine in Adjust Mode. Turn the power switch on while pressing the Start/Stop button and the reverse button at the same time. (Keep pressing both buttons until LCD screen shows adjusting window.)

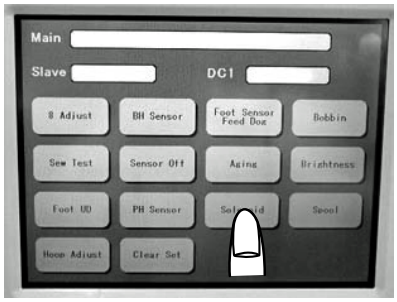

2. Press the Solenoid key on the touch panel.

3. Remove the bed cover, base and thread cutter cover.

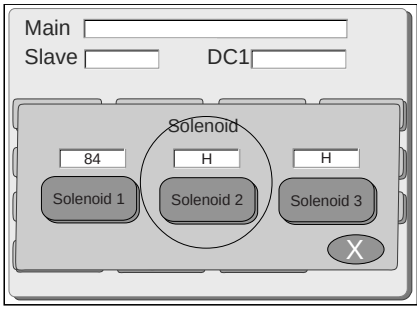

4. Lower the needle bar to its lowest position.

5. When lowering actuator arm (1), “L” will be indicated on the Solenoid 2 window of the touch panel.
   If the screen dose not show “L”, loosen screw (A) and adjust it by moving the switch left or right.

6. When raising actuator arm (1), “H” will be indicated on the Solenoid 2 window of the touch panel.
   If the screen does not show “H”, loosen the screw (A) and adjust it by moving the switch left or right.

7. Attach the thread cutter cover, bed cover and base.

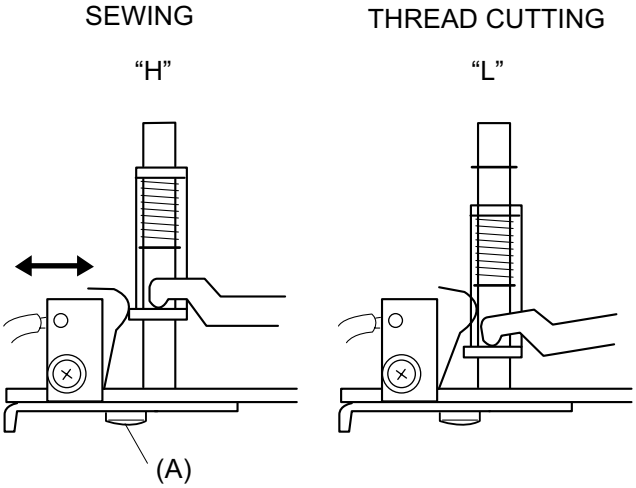

Adjusting Bobbin Winder Stopper

The amount of thread wound on the bobbin should be between 16.5 and 19.5 mm in diameter.

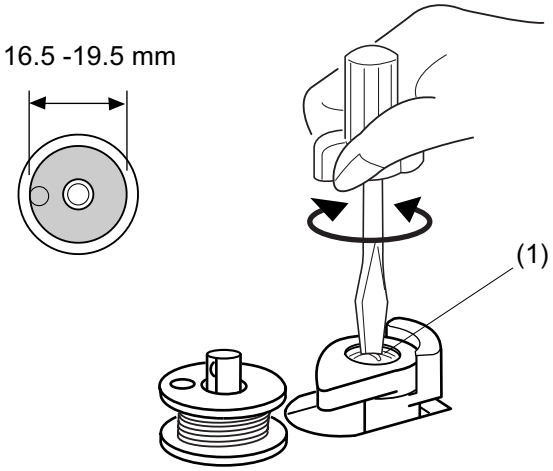

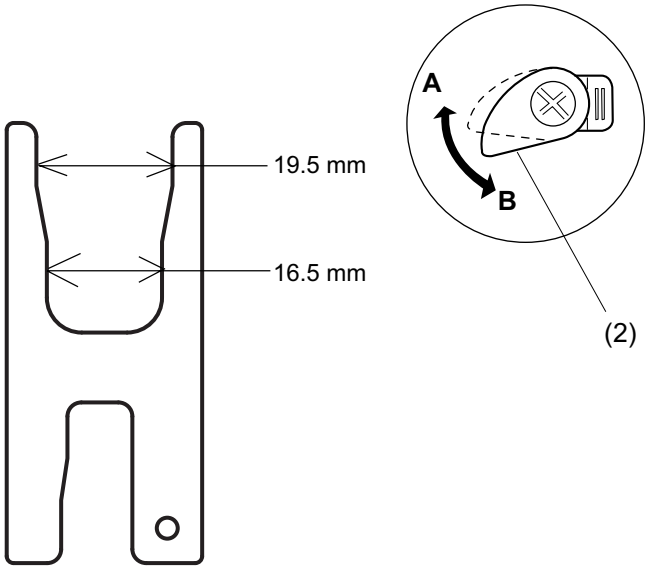

(Gauge 860G002)

1. Loosen the setscrew (1). Turn the bobbin winder stopper (2) to adjust the amount of allowable thread.

* If too much thread is allowed, turn the stopper in the direction **A**.

* If tnot enough thread is allowed, turn the stopper in the direction **B**.

2. Tighten the setscrew (1) firmly.

Adjusting Thread Drawing Lever

The standard height of the thread drawing lever from the surface of the bobbin holder should be in the range of 5.45 - 5.75 mm.

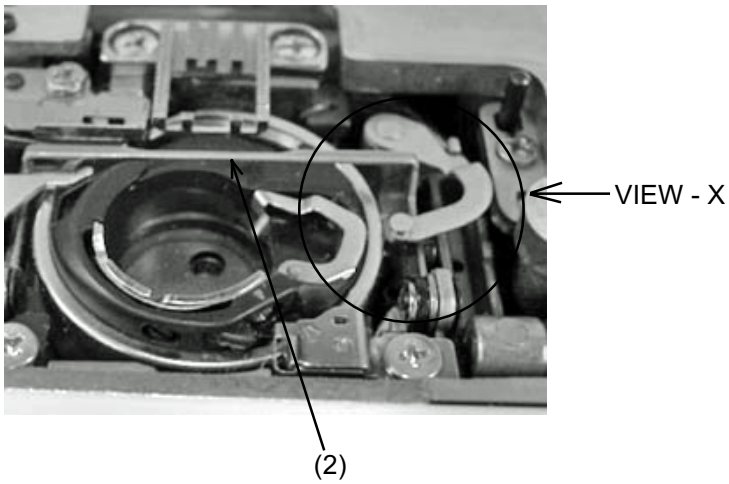

1. Remove the needle plate.
2. Loosen the hexagonal bolt (1) and adjust the distance of the thread drawing lever (2) from the bobbin holder (3) to be between 5.45 mm and 5.75 mm by moving the thread drawing lever up or down.
3. Tighten the hexagonal bolt.
4. Attach the needle plate

VIEW - A

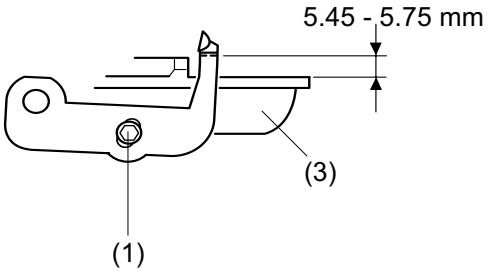

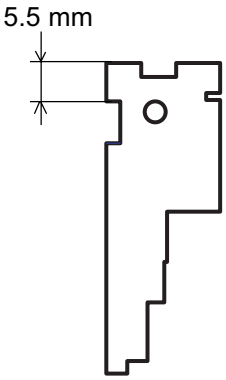

(Gauge 860G001)

Adjusting X and Y Sensors

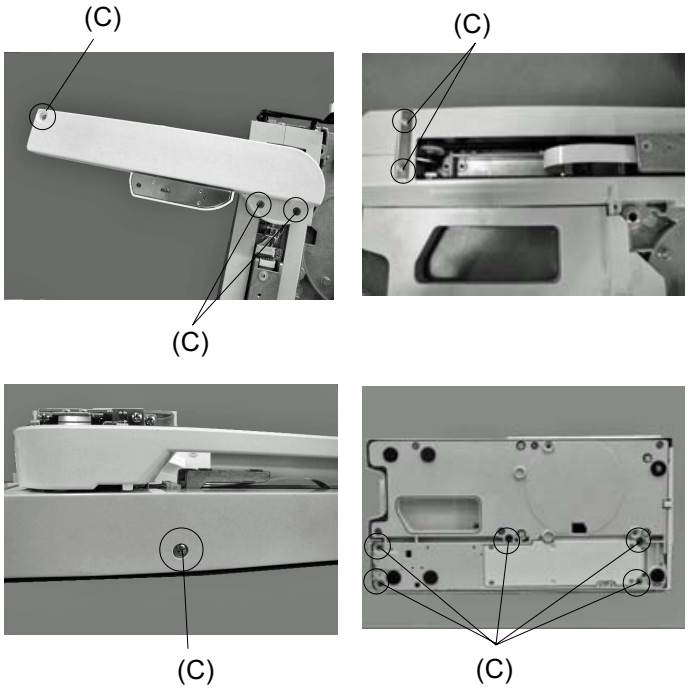

1. Turn the power switch on to set to the initial setting.

2. Turn the power switch off and remove the base unit.

3. Remove the Y carriage cover (1), X carriage cover (2), X carriage cap (3) and embroidery base covers (4) and (5).

4. Loosen the screw (A) to adjust dimension (Y) to be between 16 mm and 17 mm by moving the Y sensor attaching plate (6).

5. Loosen the screw (B) to adjust dimension (X) to be between 4.3 mm and 5.3 mm by moving the X sensor attaching plate (7).

7. Attach the Y carriage cover (1), X carriage cover (2), X carriage cap (3) and embroidery base covers (4) and (5).

8. Attach the base.

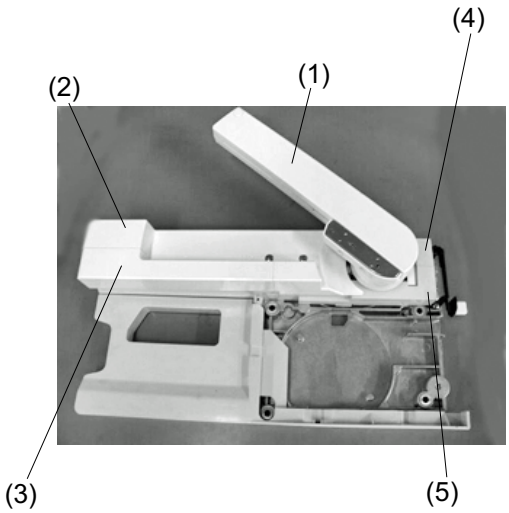

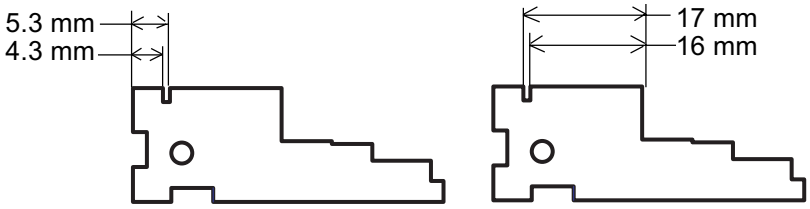

(Gauge 860G001)

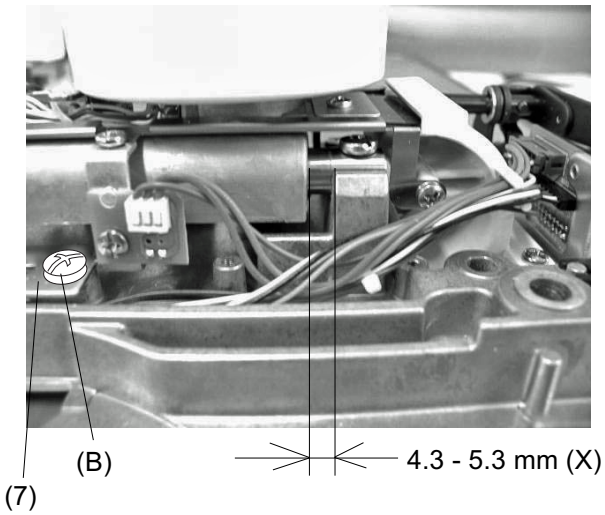

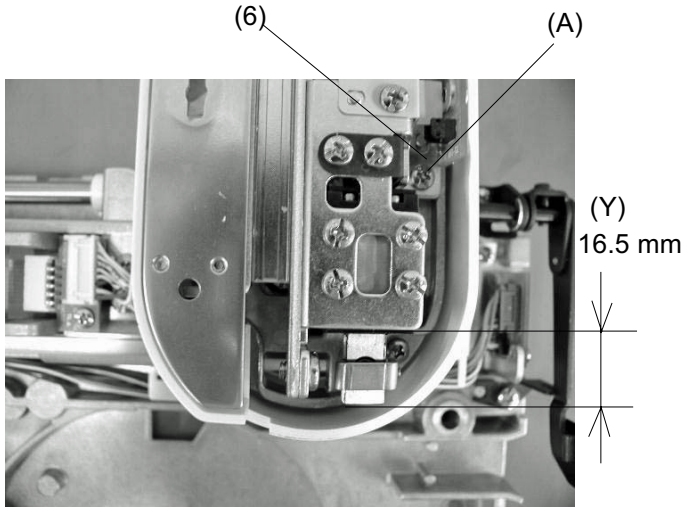

Adjusting the Sewing Start Position

Follow this method to adjust the sewing start position without having to remove the base.

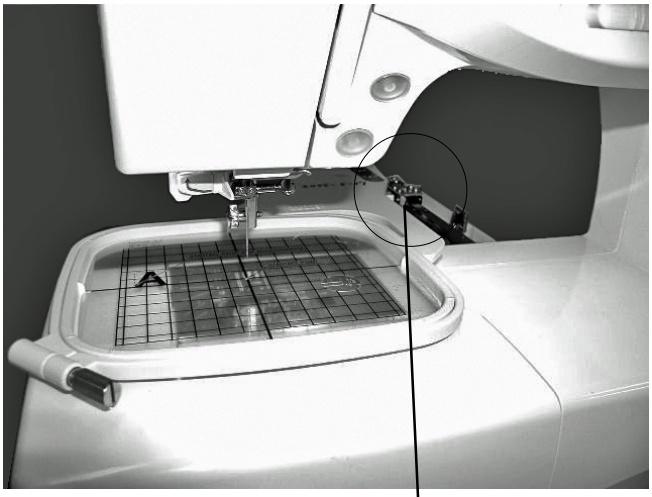

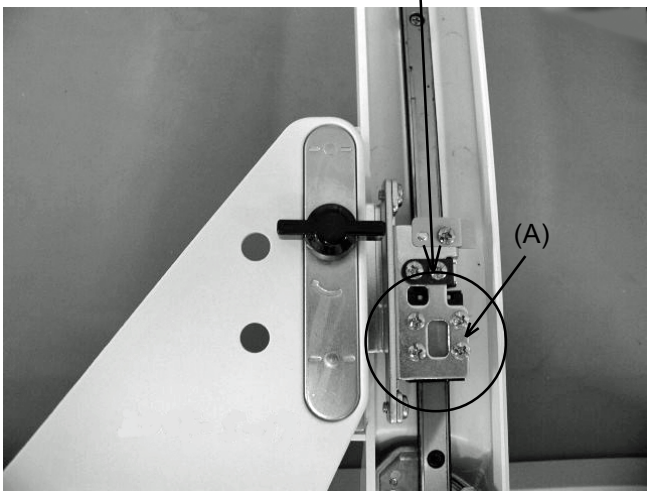

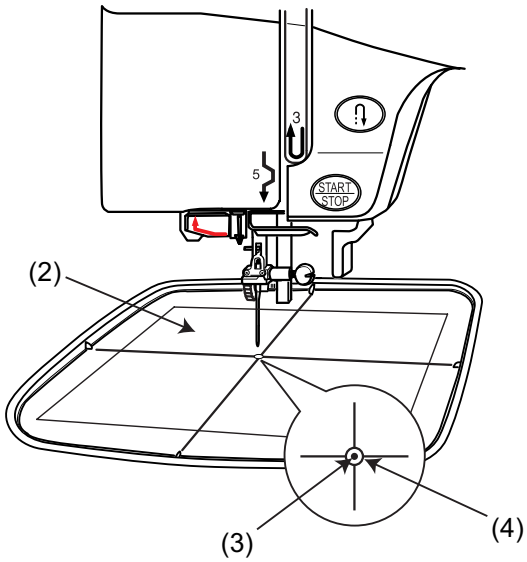

Note:
If there is significant variance in the start position, see page 41.

1. Remove the Y carriage cover (1).

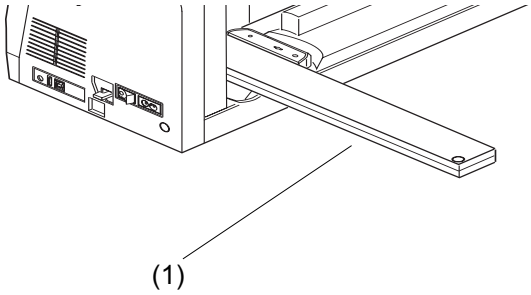

2. Remove the foot holder and attach the ST embroidery hoop.

3. Place the template (2) on the ST embroidery hoop.

4. Turn the power switch on. Select the embroidery mode and select stitch No.1.

5. Check if the needle (3) passes through the start position hole (4) of the template.

6. Turn the power switch off.

7. If there is a gap, loosen the 4 screws (A) and adjust so that the needle comes to the center.

8. Turn the power switch on again. Select stitch No. 1 and check the start position.

9. Remove the template and the embroidery hoop. Select the normal sewing mode and return the carriage to the home position.

10. Turn the power switch off and attach the Y carriage cover.

Setting Position of Thread Take Up lever

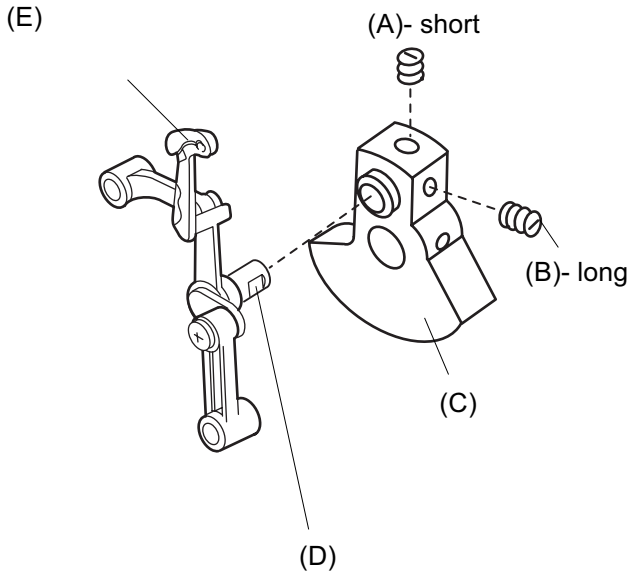

Insert the needle bar crank into the take up crank (C) so that the flat part of the needle bar crank (D) faces the long setscrew (B). Tighten the setscrew (B), then the short setscrew (A).

To Adjust Upper Shaft Declutch Device

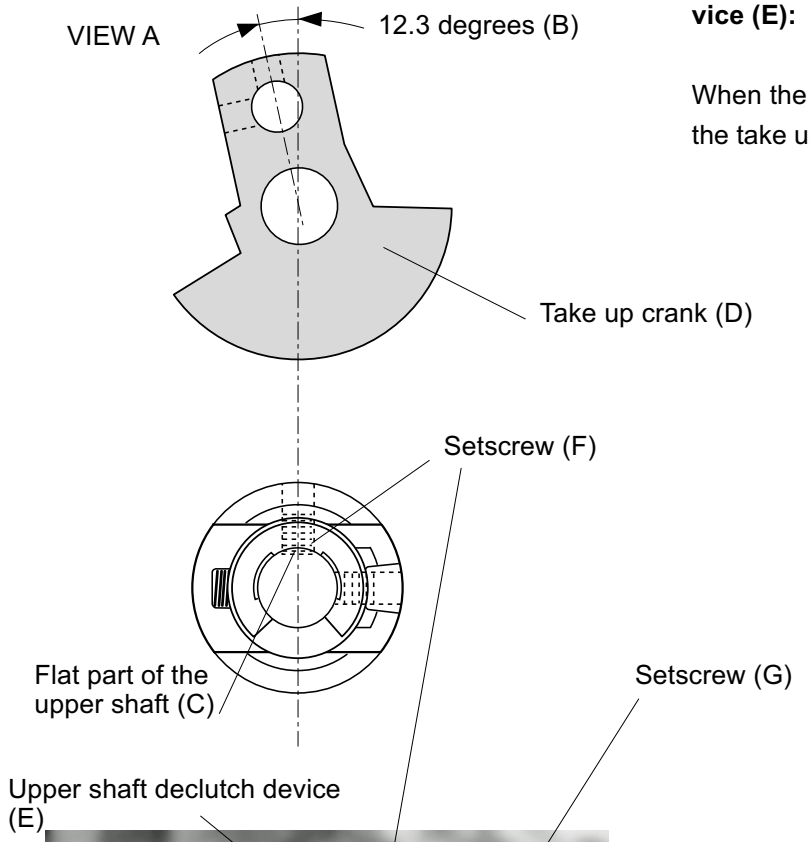

To correct the position of the upper shaft declutch device (E):

When the flat part of the upper shaft (C) is leveled, the take up crank (D) should be at a 12.3 degree angle (B).

To reduce the play of the declutch slider:

To reduce the play of the declutch slider, loosen the setscrews (F) and (G).
While pushing the upper shaft declutch device to the right, tighten the setscrew (F). Then tighten the setscrew (G). Make sure that the declutch slider (H) moves smoothly.

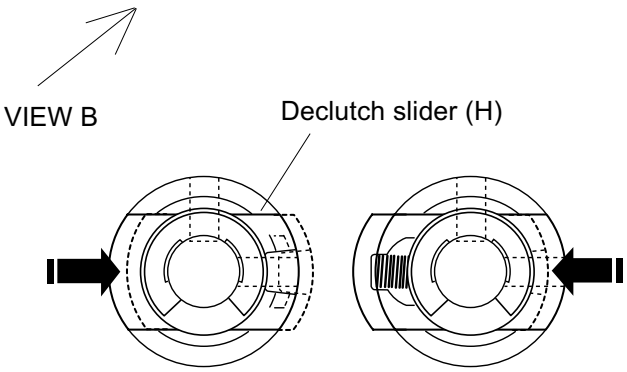

The declutch slider should move smoothly in both directions.

Setting Position of Parts on Lower Shaft

The setting positions of the parts on the lower shaft are as shown below.

The setting angle of the parts (A), (B) and (C) should be the same as (D).

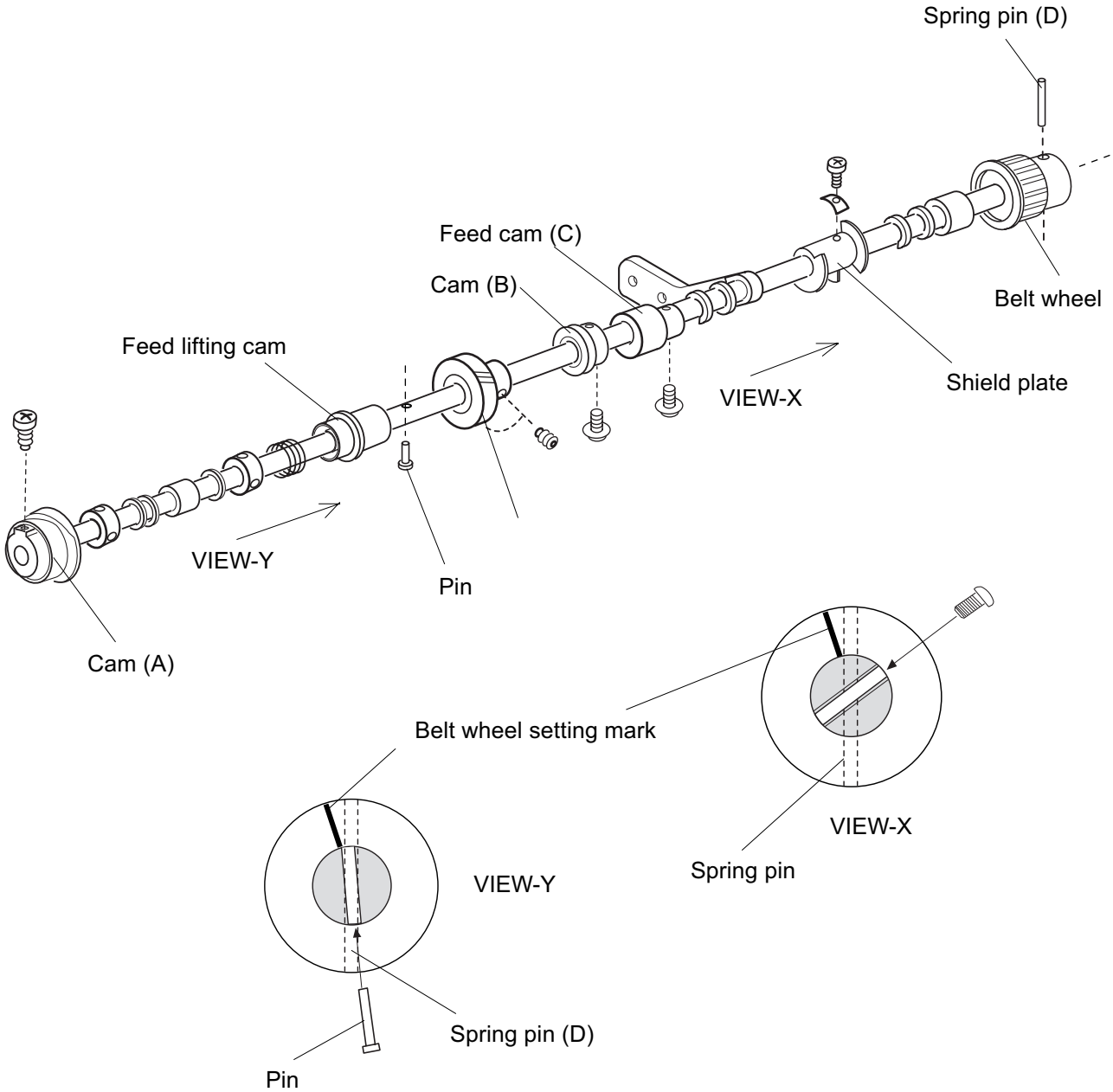

Setting Position of the Upper and Lower Shafts

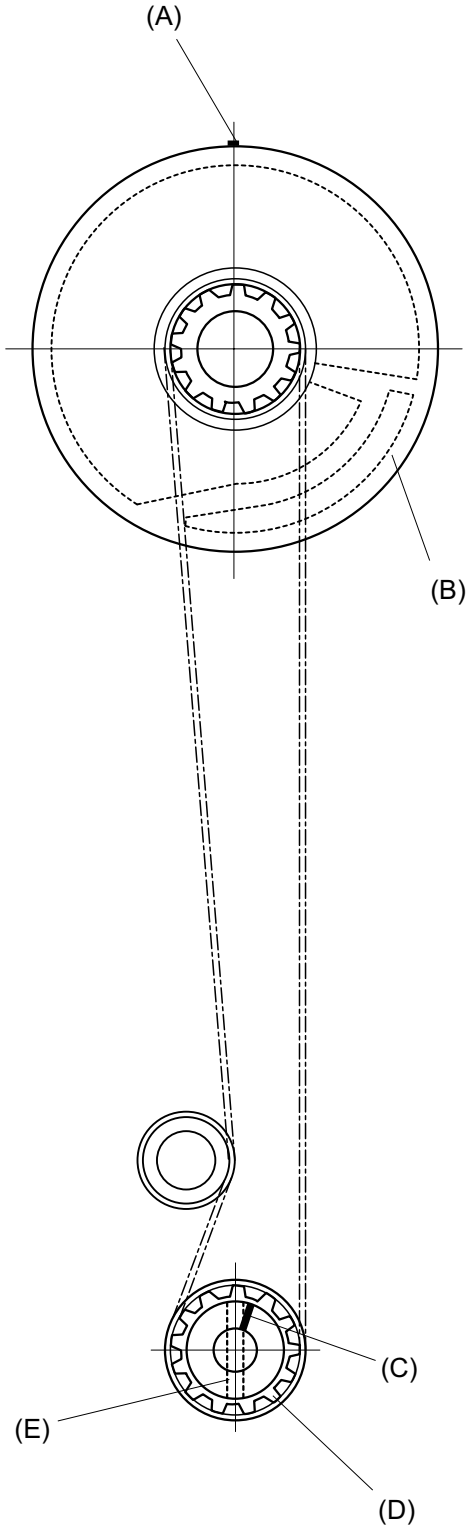

When the setting mark (A) on the cam (B) is exactly at the top, the spring pin (E) should be vertical and the setting mark (C) on the belt wheel (D) should be in the position as shown.