SERVICE MANUAL FOR
COMPUTERIZED SEWING MACHINE

PC6000
SUPER ACE I

9. 1997.

GENERAL INFORMATION

This service manual has been compiled for explaining repair procedures of the model PC6000 and SUPER ACE I.
This was produced based on up-to-date product specifications at the time of issue, but there may have been changes of specifications for the purpose of improvements.
Contact manufacturer or local sales company for information concerning such changes.

Brother Industries, Ltd.
Nagoya, Japan

I . PRINCIPAL MECHANISMS 1
II . DISASSEMBLING AND REASSEMBLING THE SEWING MACHINE 7
III. HOW TO ADJUST MECHANICAL ELEMENTS 17
IV. HOW TO ADJUST ELECTRONIC ELEMENTS 29

CAUTION

1. Always use rubber gloves when handling printed circuit boards and never touch the metal portion of a printed circuit board with bare hands.
2. Keep your body earthed in order to avoid generating static electricity.
3. Pack printed circuit boards in aluminum foil and avoid subjecting them to any form of impact during storage or transportation.
4. Do not touch or damage the metal portion of a printed circuit board with a screwdriver or any other tool while making repairs or the like.

I. PRINCIPAL MECHANISMS

1. MECHANICAL CHART 2
2. POWER TRANSMISSION CHART 3
3. ELECTRONIC PARTS ARRANGEMENT CHART 4
4. CONTROL SYSTEM BLOCK DIAGRAM 4
5. MAIN MOTOR CONTROL 5
6. PATTERN GENERATOR 5
7. AUTOMATIC THREAD TENSION 5
8. OTHER ELECTRONIC COMPONENT FUNCTIONS 6

1. MECHANICAL CHART

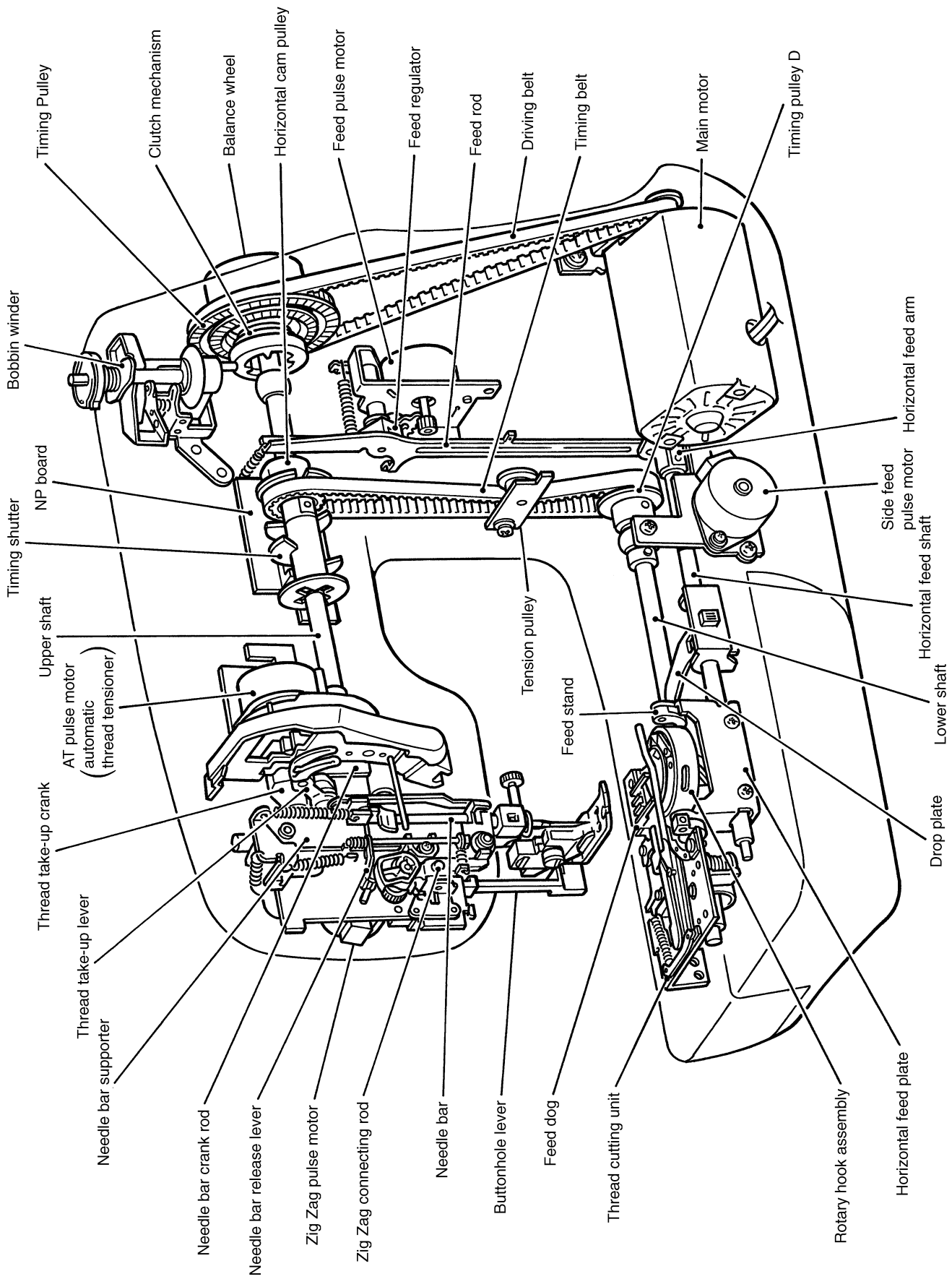

2. POWER TRANSMISSION CHART

(A) Generating mechanism of needle bar, thread take-up lever and zigzag movements

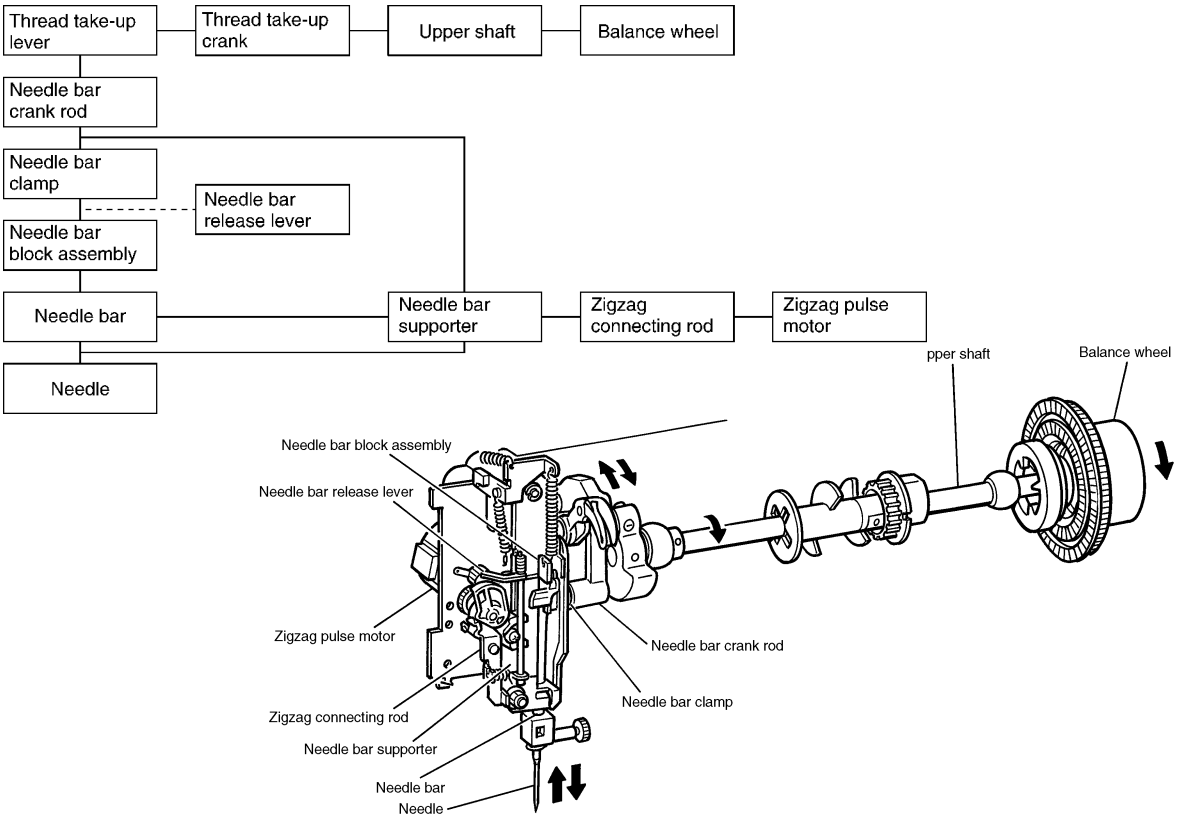

(B) Mechanism of feed dog and rotary hook movement

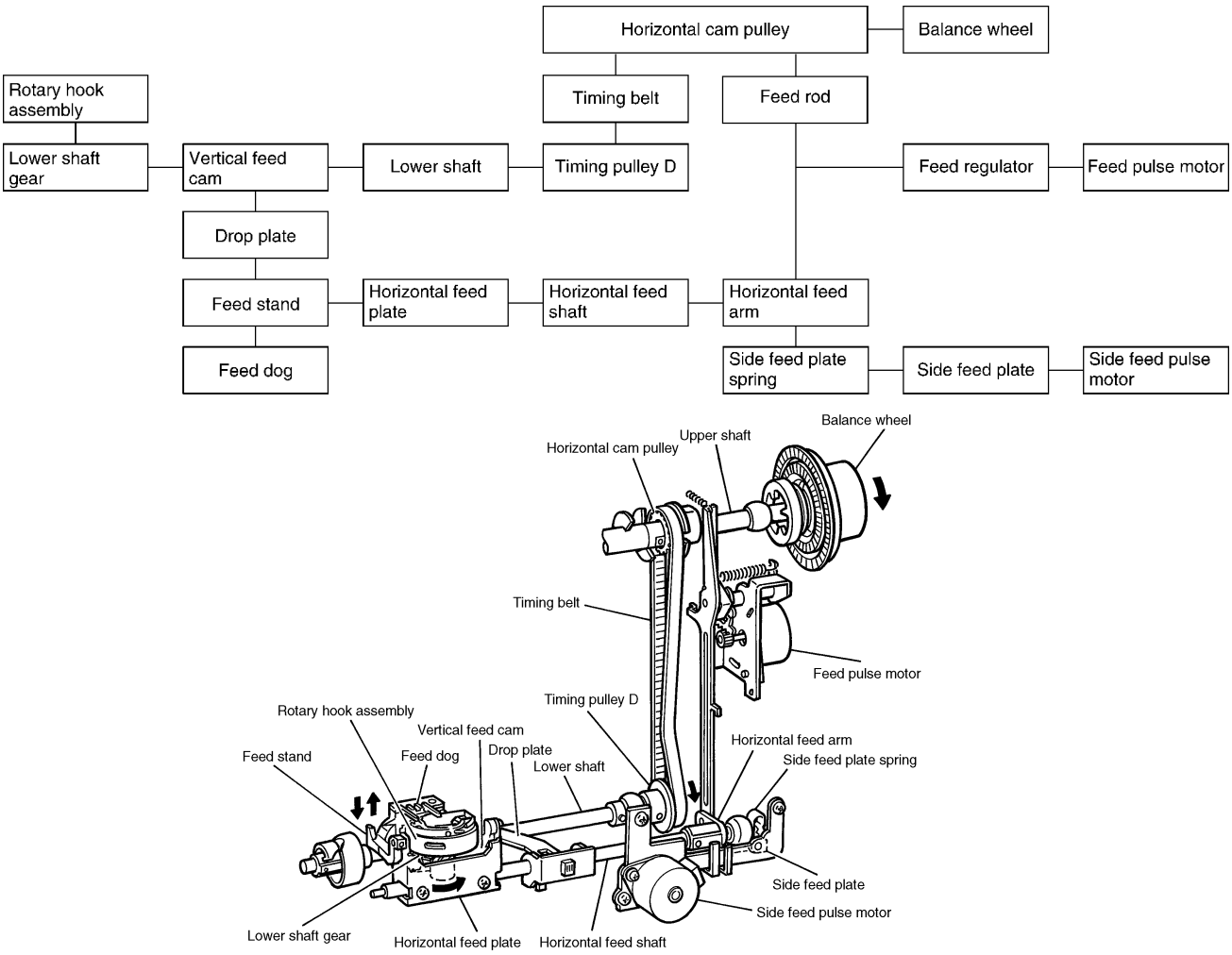

3. ELECTRONIC PARTS ARRANGEMENT CHART

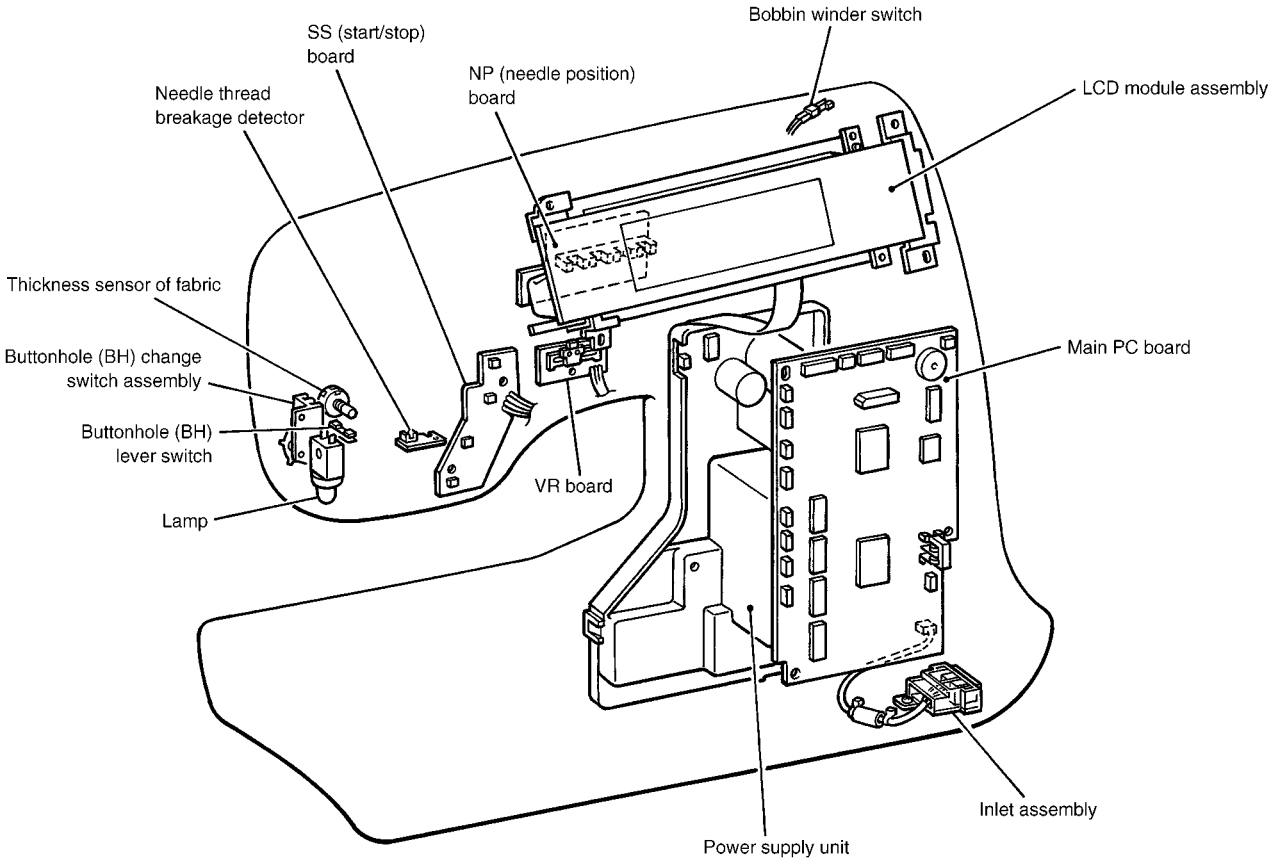

4. CONTROL SYSTEM BLOCK DIAGRAM

Control system block diagram

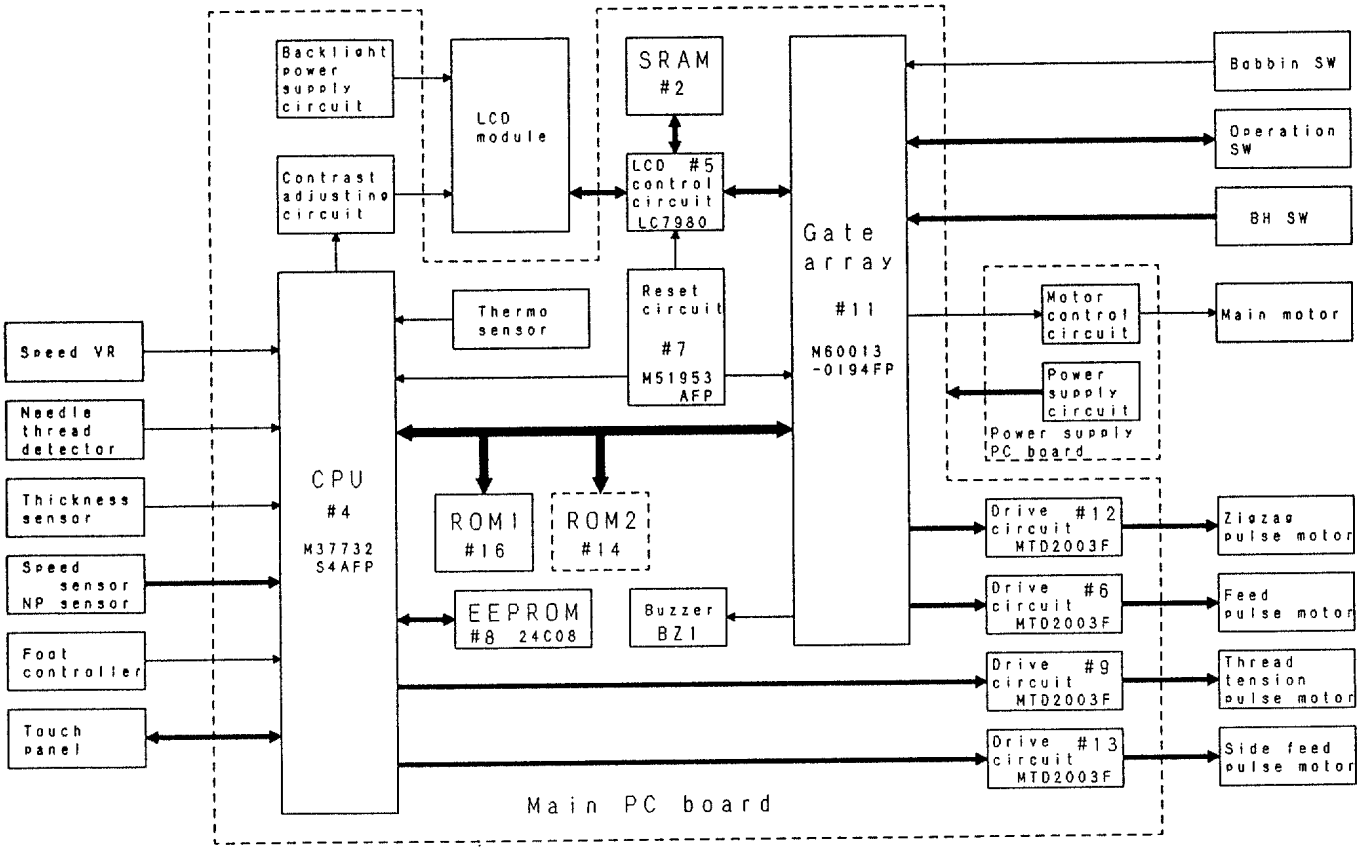

5. MAIN MOTOR CONTROL

The main motor for the sewing machine is required to smoothly change from low speed to high speed without any fluctuations due to load or temperature changes. To fully comply with this requirement, this model adopts PWM control using FET.

6. PATTERN GENERATOR

For conventional sewing machines, the pattern was generated by rocking the needle bar and the feed regulator by means of a pattern cam onto which the pattern data had been mechanically engraved. In contrast to this, this model stores the data electronically in memory and uses a feed pulse motor, side feed pulse motor and a zigzag pulse motor to directly rock the needle bar and the feed regulator to generate the pattern. In addition, the pulse motors must move the position of the needle while the needle is raised and stop it in the correct position (and similarly, they must move the position of the feed regulator while the needle is lowered). Thus, highly-precise positioning and a fast response speed are required. Because of this, the feed pulse motor, side feed pulse motor and a zigzag pulse motor were adopted, and a simple open-loop structure circuit was employed.

Block diagram of pattern generator control

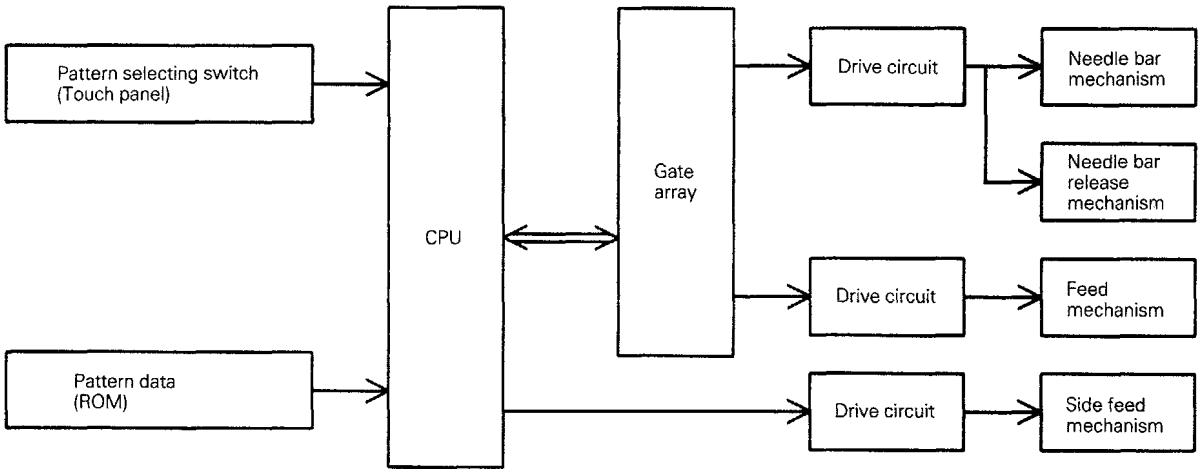

7. AUTOMATIC THREAD TENSION

On former models, the operator adjusted the thread tension of the needle and bobbin threads by changing the pressure between the tension disks.
On this model, however, the thread tension is calculated based on the feed, zigzag width, fabric thickness, and the appropriate needle thread amount fed by the thread tension pulse motor.
This always gives you the correct thread tension regardless of thread, kinds of fabric or sewing speed.

Automatic thread tension block diagram

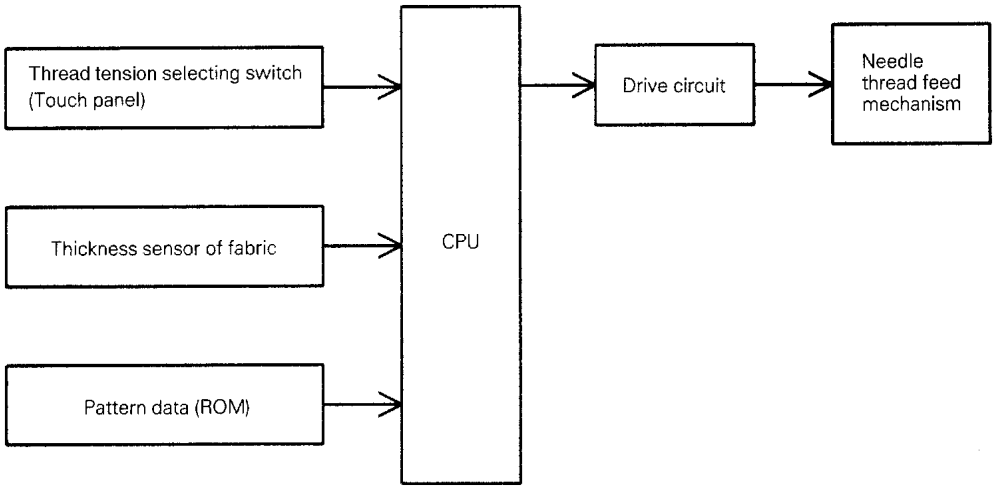

8. OTHER ELECTRONIC COMPONENT FUNCTIONS

Start/stop switch — used to start and stop (SS) the machine. If you want to start sewing at low speed, keep this switch depressed and start sewing.

Backstitch switch — used for backstitching and lockstitching. Backstitching is performed at low speed in the reverse direction while the switch is pressed. For lockstitching, three stitches are made at the current needle position and then sewing stops.

Needle position (UP/DOWN) switch ... used to change the needle position either up or down.

Automatic thread cutter switch — used to cut the thread automatically. When you press this switch, the machine will automatically cut the thread, regardless of the needle position, and stop with the needle at its upper position.

Touch panel — used to select pattern and input number required for sewing by simply touching the display on the panel. This simplifies the operation for selecting the desired pattern and number.

Buttonhole stitch switch — used to detect the edges of the buttonhole stitch by means of the buttonhole stitch presser foot and lever.

Buttonhole stitch lever switch ..... used to detect whether the buttonhole stitch lever is raised or lowered.

Rotation sensor — detects the drive timing of zigzag, feed, side feed and thread feed pulse motor and detects the vertical position of the needle. Also detects the turning angle of the upper shaft by means of a photointerruptor and shutter installed on the upper shaft.

Speed sensor — used to detect the rotation speed of the main motor.
detects the operating speed of the main motor by means of a photointerruptor and shutter installed on the upper shaft.

Bobbin winder switch ..... used to detect whether the bobbin winder has been set when winding the lower thread.

Junction for foot controller ..... when using the foot controller, connect it to this terminal.

Transformer — used for driving the pulse motors, to illuminate the lamps and to supply power to the electronic circuitry.

Lamp ..... is 12V 5W.

II. DISASSEMBLING AND REASSEMBLING THE SEWING MACHINE

1. DISASSEMBLING AND REASSEMBLING THE OUTER PARTS AND MAIN PARTS 8
2. LEAD WIRE ARRANGEMENT 16

1. DISASSEMBLING AND REASSEMBLING THE OUTER PARTS AND MAIN PARTS

1. Remove the screw securing the face plate, and the face plate by sliding it to the left.
2. Remove the screw securing the free arm cover, and the free arm cover by sliding it to the left.
3. Remove the blind cap on the belt cover, the screw securing the belt cover, and the belt cover from below by sliding it to the right.
4. Remove the two screws securing the base cover, slide the base cover to the left and then holding the front, slide it to the left and out.
5. Remove the screw securing the front cover (near spool pin), and loosen the two screws (below jaw section on face plate side, below free arm). Open the front cover toward the front, remove the four connectors and then the front cover.
6. Remove the two screws securing the needle plate, and the needle plate.
7. Remove the three screws securing the rear cover, and the rear cover from the rear side.

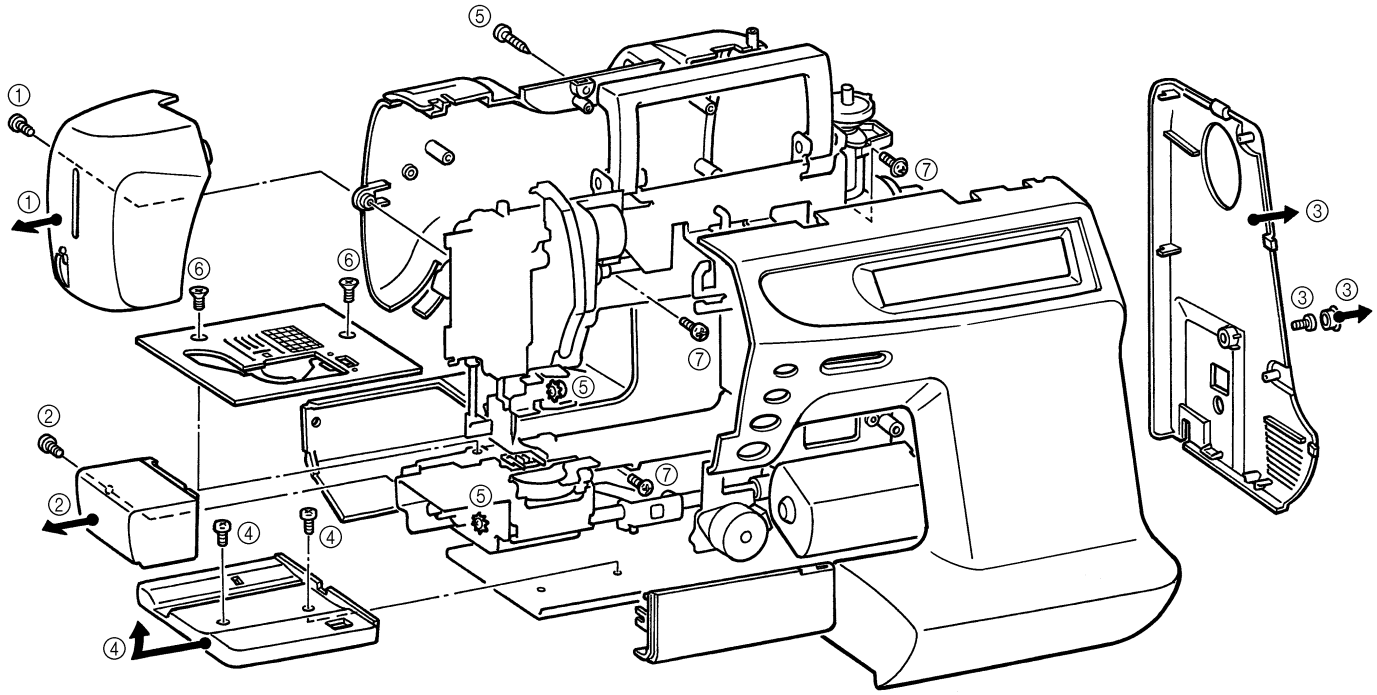

8. Remove the presser holder and needle.
9. Remove the 11 connectors, the two screws, and the main PC board.
10. Remove the two screws and handle holder assembly.
11. Remove the screw and thread winding assembly.
12. Remove the motor belt and pull out the motor connector. Remove the two screws and the main motor.
13. Remove the screw and the board set plate D.
14. Remove the side feed plate spring, the three screws and the SPM holder.
15. Remove the two screws, and pull out the thread guide cover from the tension link.
16. Remove the screw and the H block shaft holder assembly.
17. Remove the three springs and the needle bar block assembly.
18. Remove the two screws and the ZPM assembly.

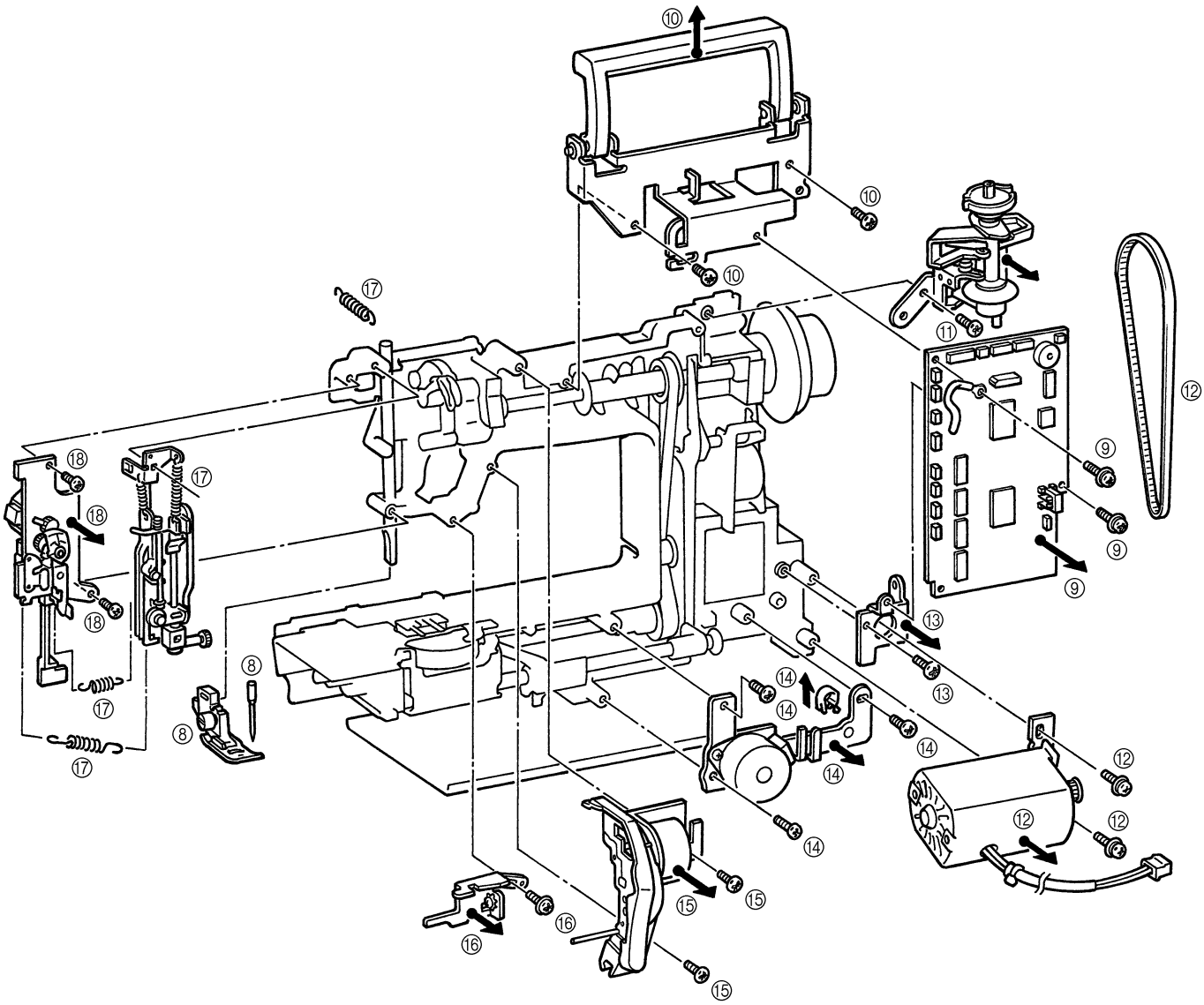

19. Remove the two screws and the thread cutter unit.
20. Remove the screw and the inner rotary hook bracket.
21. Remove the presser bar clamp screw.
22. Remove the presser bar by lifting it from above, and the presser bar clamp.
23. Remove the presser spring screw and the presser bar spring.
24. Remove the presser lifter by pulling the presser lifting shaft straight out from the front.
25. Pull the tension releaser plate out forward.
26. Remove the screw and the thread take-up shaft.

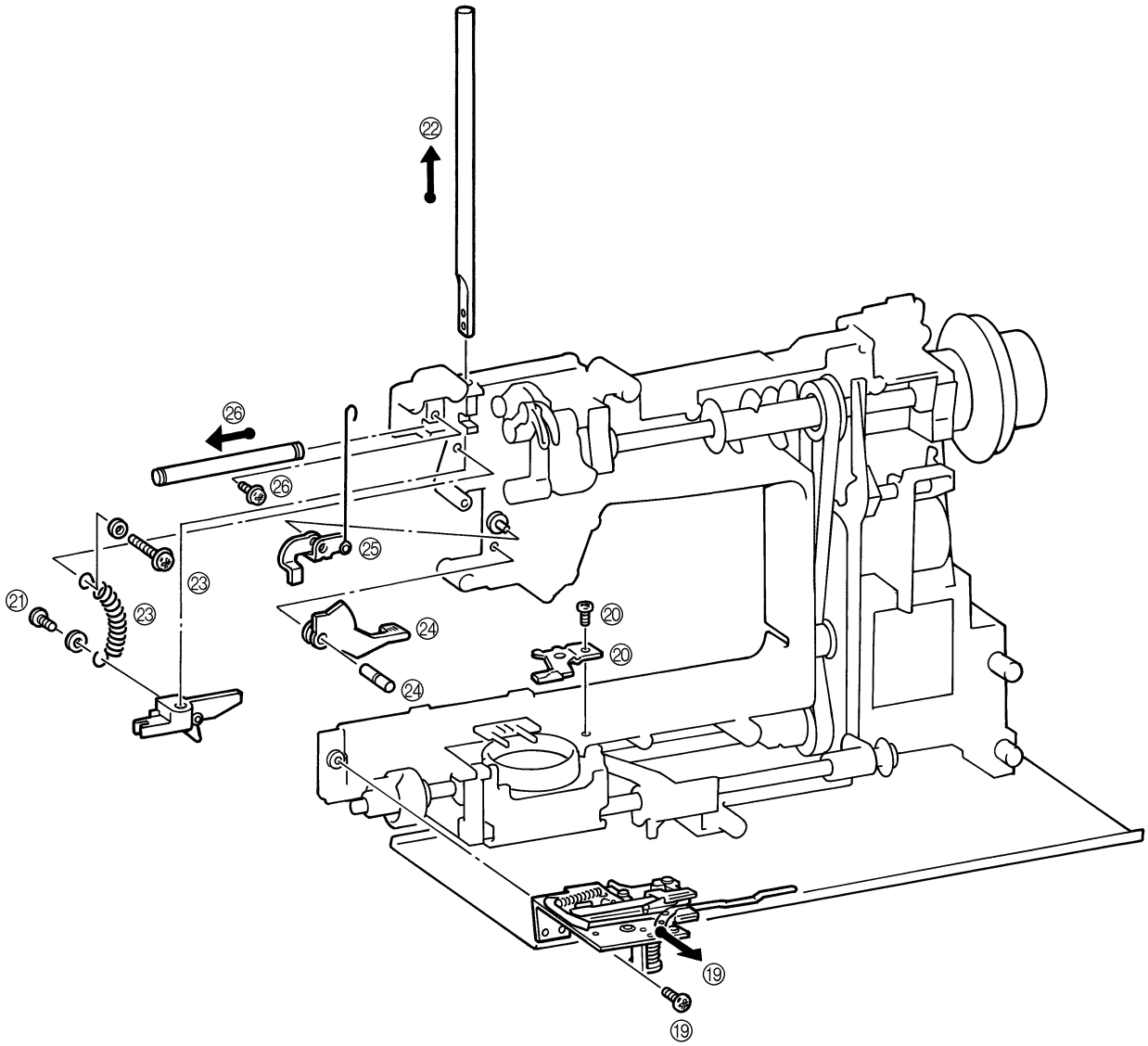

27. Remove the two screws securing the upper shaft metal, and the upper shaft assembly.
28. Remove the screw and the N.P. board assembly.
29. Remove the screw and the tension pulley holder.
30. Remove the two feed rod tension springs.
31. Remove the metal presser screw and horizontal feed shaft bracket screw, and then remove the horizontal feed assembly.
32. Remove the two screws and FPM holder assembly.
33. Remove the screw and the outer rotary hook assembly.
34. Remove the two metal presser screws, and remove the lower shaft assembly and timing belt.
35. Remove the connector, the two screws and the power supply unit assembly.
36. Remove the three screws and base plate assembly.

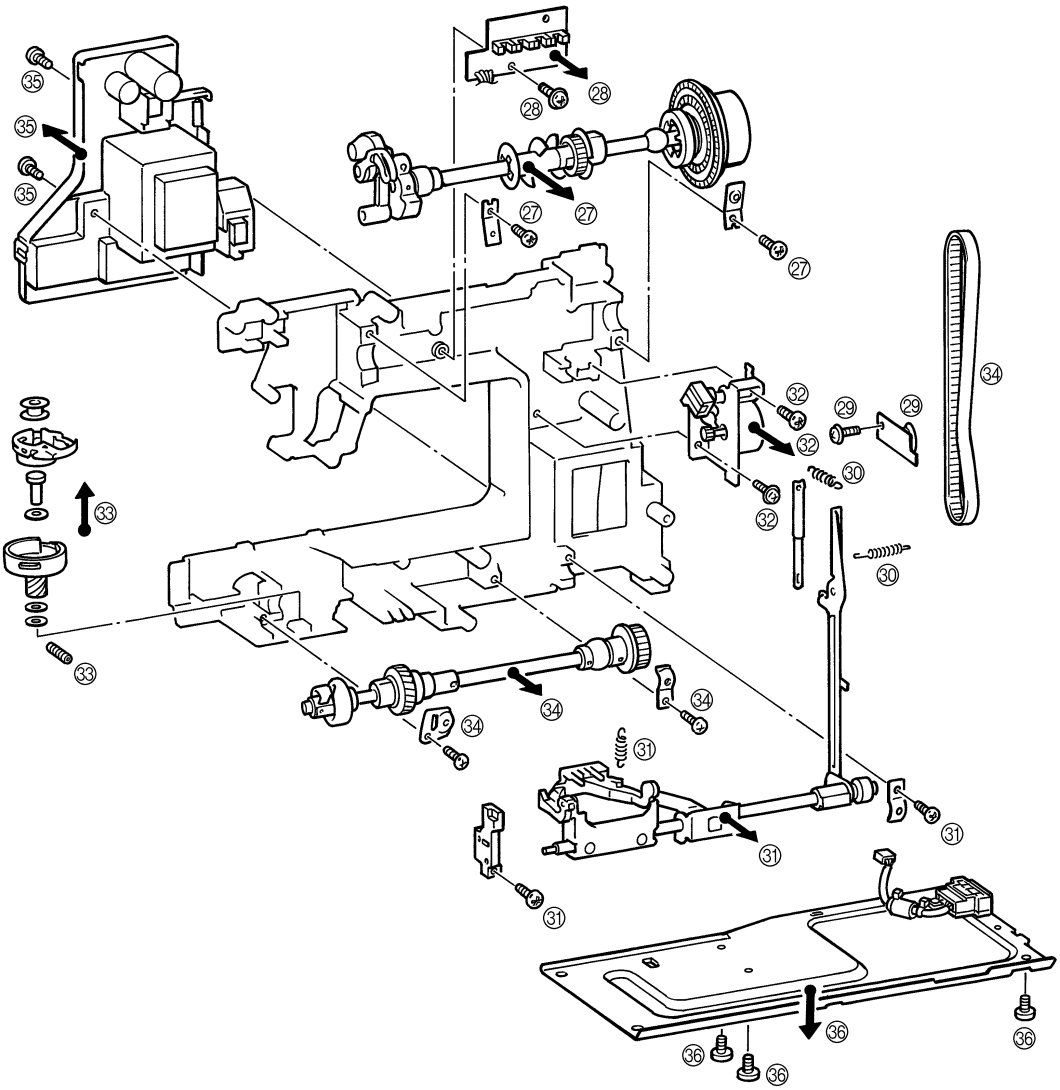

37. Attach the base plate using the three screws.
38. Attach the power supply unit assembly using the two screws, and insert the inlet connector.
39. While attaching the timing belt, assembly the lower shaft assembly using the metal presser and screw.
40. Position the outer rotary hook and three spacers with the lower shaft assembly (refer to following illustrations), and attach using the screw.
41. Attach the FPM holder assembly using the two screws.
42. Attach the horizontal feed shaft bracket using the screw, and attach the horizontal feed assembly using the metal presser and screw.
43. Insert the shaft of the feed rod into the feed block, and catch the two feed rod tension springs.
44. Attach the tension pulley holder using the screw.
45. Attach the N.P. board assembly using the screw.
46. Insert the timing belt over the upper shaft and attach using the metal presser and two screws.

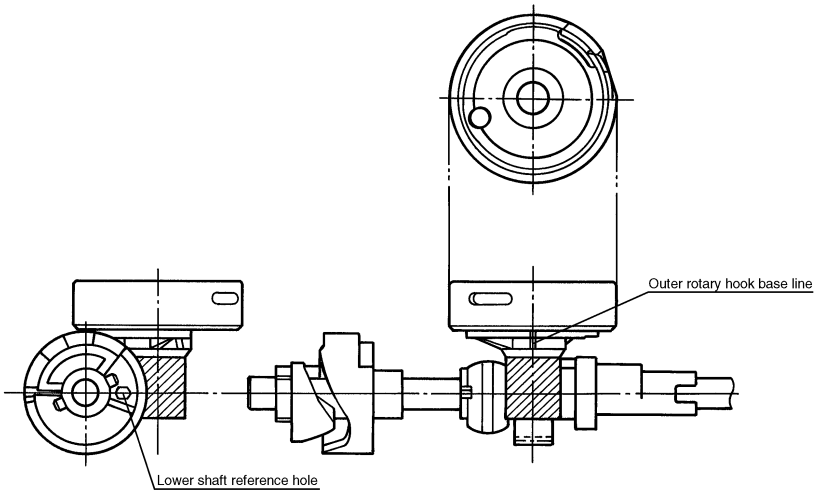

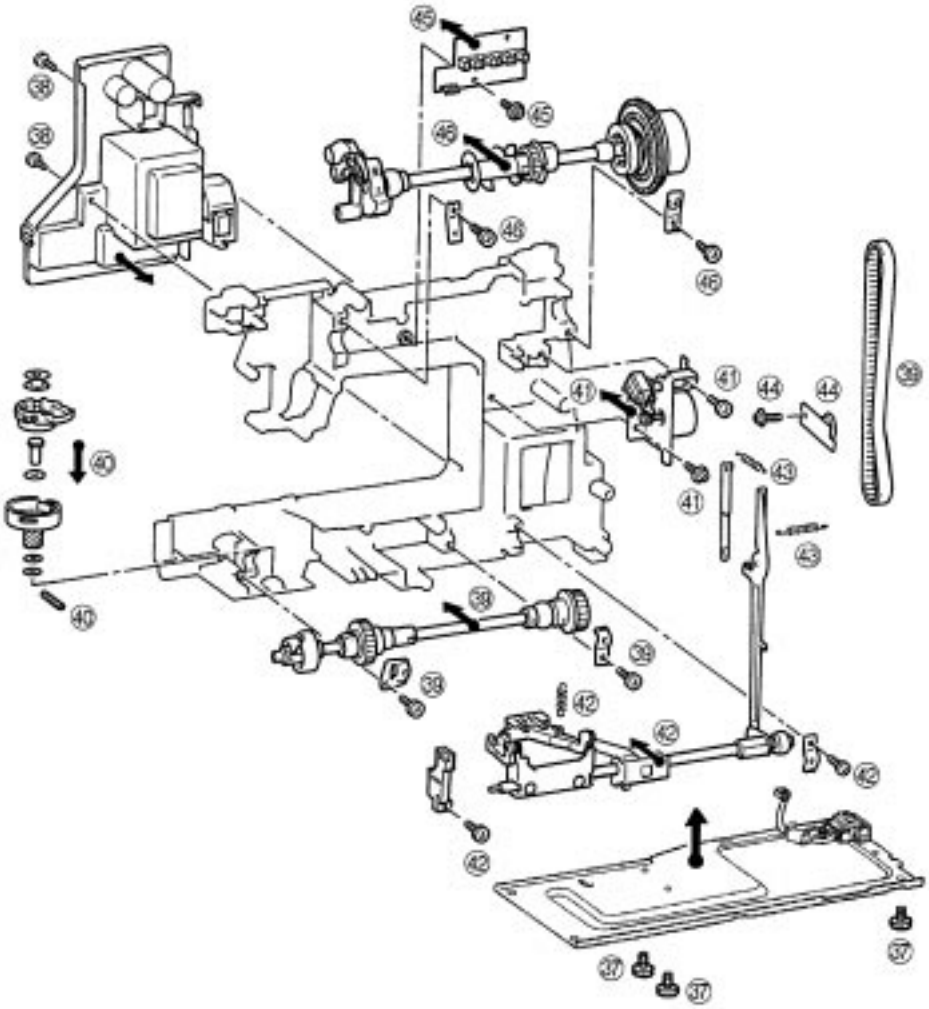

47. Attach the thread take-up shaft using the screw.
48. Insert the tension releaser plate.
49. Attach the presser spring using the collar and screw.
50. Insert and attach the presser foot lifter using the presser lifter shaft.
51. Insert and attach the presser bar into the presser bar clamp.
52. Attach the presser bar spring onto the presser bar clamp.
53. Attach the inner rotary hook bracket using the screw.
54. Attach the thread cutter unit using the two screws.

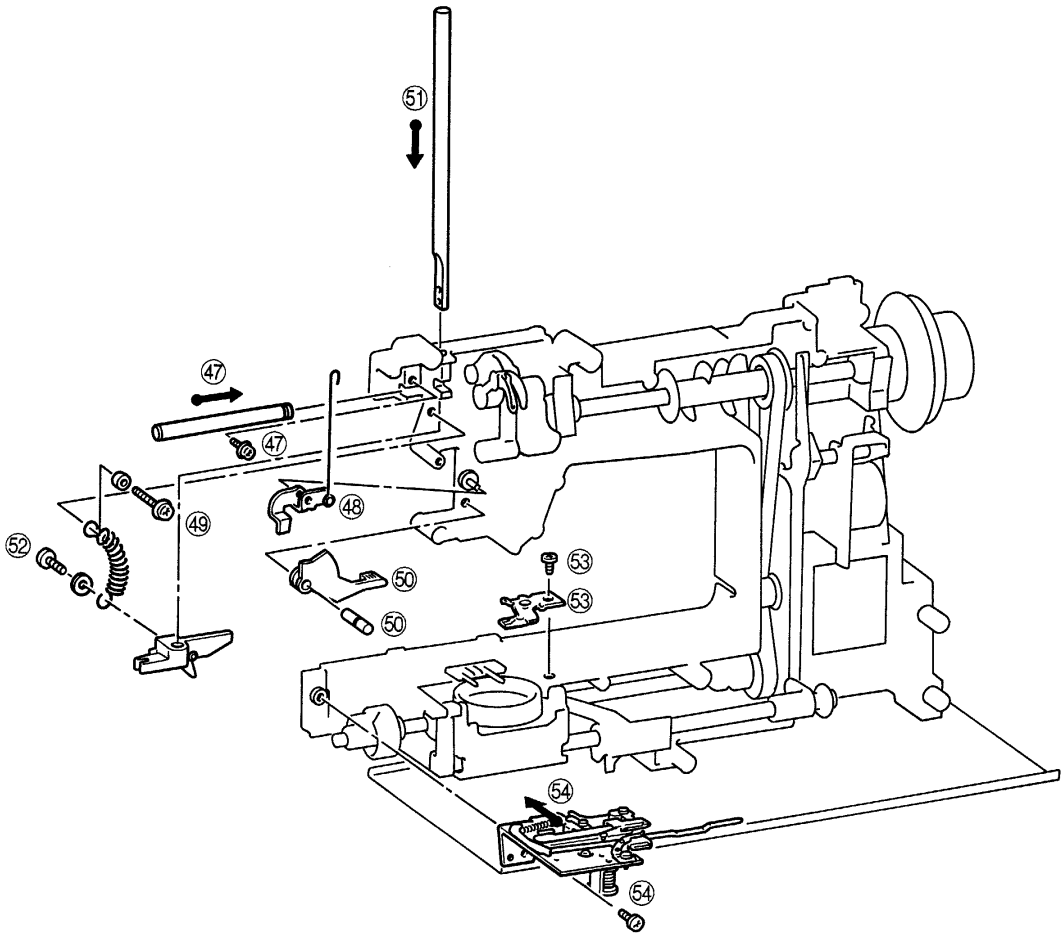

55. Attach the ZPM holder assembly using the two screws.
56. Attach the needle bar block assembly using the three springs. (Insert the needle bar clamp into needle bar crank rod)
57. Attach the H block shaft holder using the screw. (Insert the needle bar block arm into the pin on the needle bar block.)
58. While inserting the thread guide cover assembly into the thread release link attach using the two screws.
59. Attach the SPM holder assembly using the three screws, and couple the horizontal feed shaft and side feed plate using the side feed plate spring.
60. Attach the set plate D using the screws.
61. Connect the motor connector, attach the main motor using the two screws and catch the motor belt.
62. Attach the bobbin winder assembly using the screw.
63. Attach the handle holder assembly using the two screws.
64. Attach the main board assembly using the two screws. Connect the 11 connectors.
65. Attach the presser holder and needle.

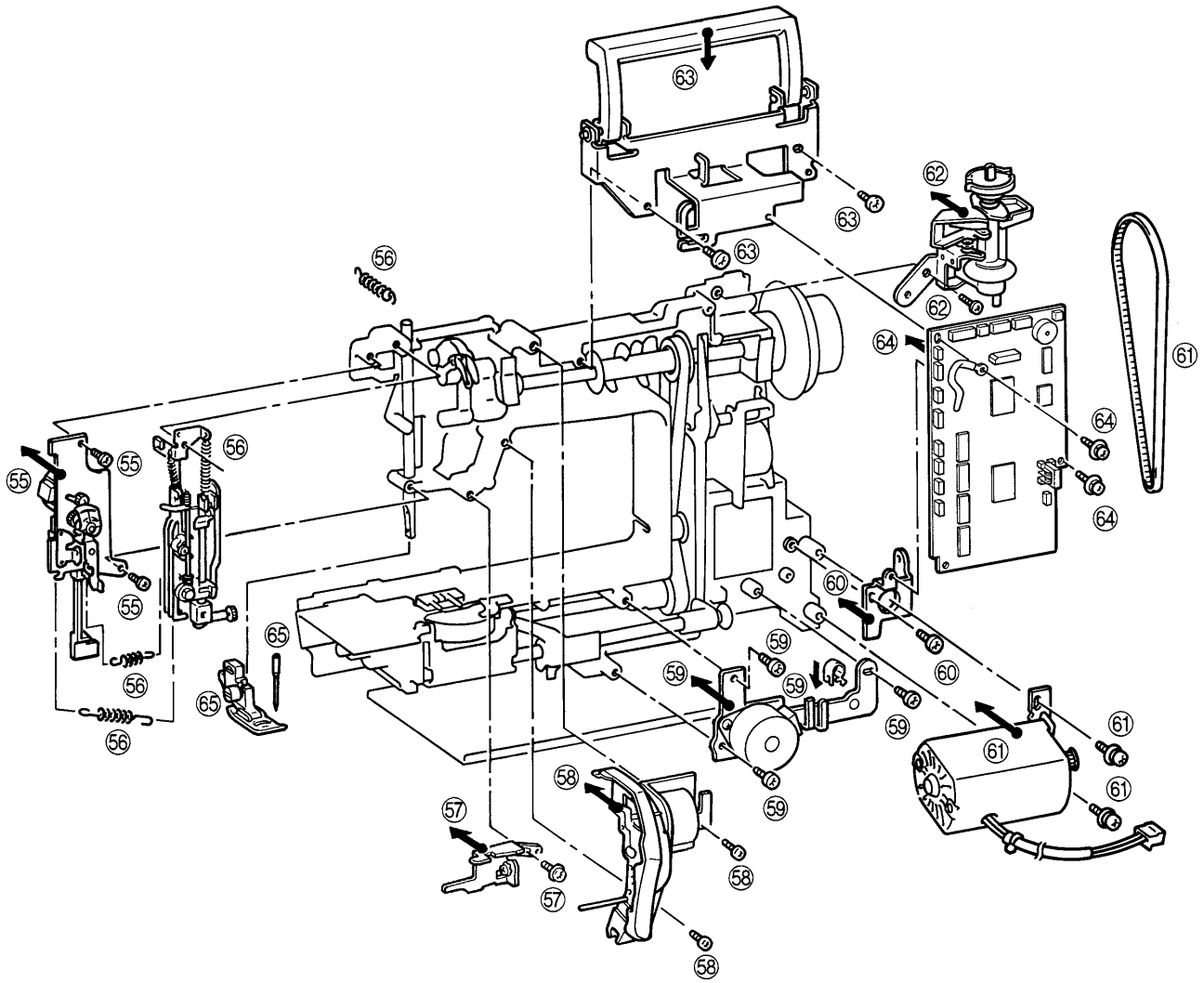

66. Attach the rear cover using the three screws.
67. Attach the needle plate assembly using the two screws.
68. Connect the four connectors, and attach the front cover using the three screws.
69. Insert the base cover into the base plate and attach using the two screws.
70. Attach the belt cover using the screw, and fit the blind cap on.
71. Attach the free arm cover using the screw.
72. Attach the face plate using the screw.

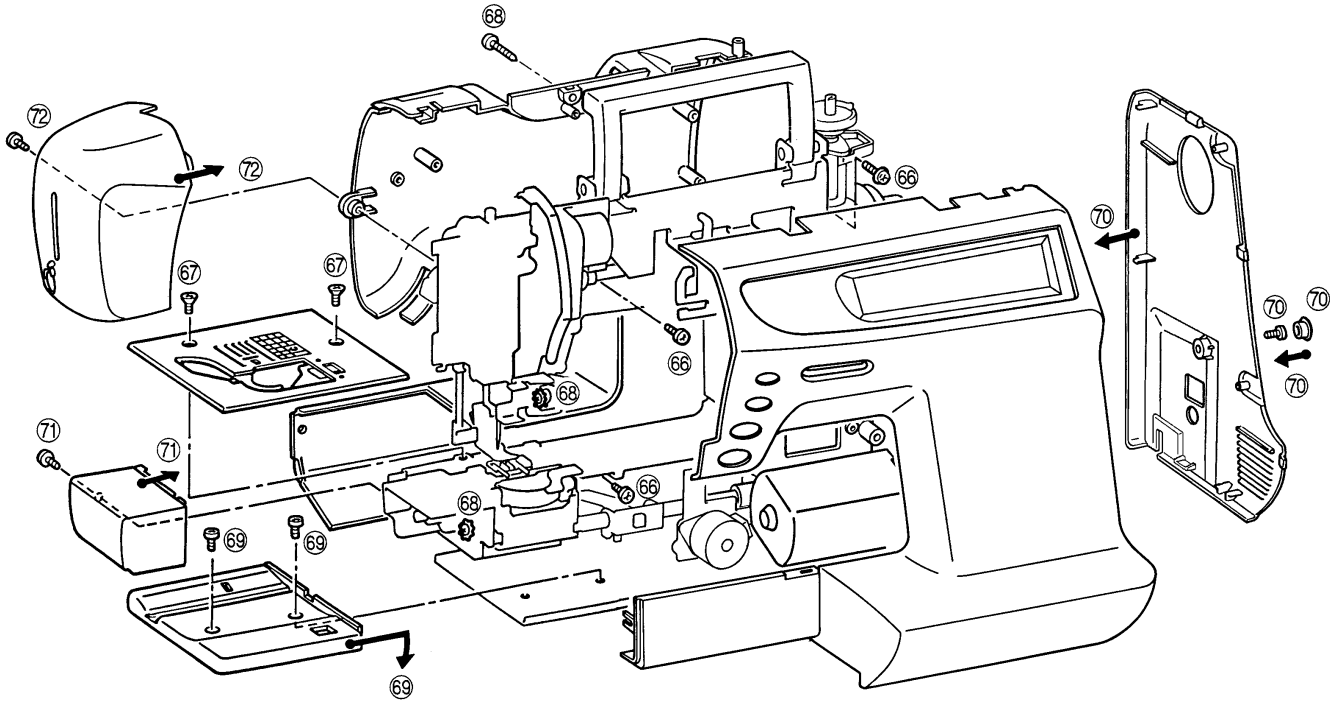

2. LEAD WIRE ARRANGEMENT

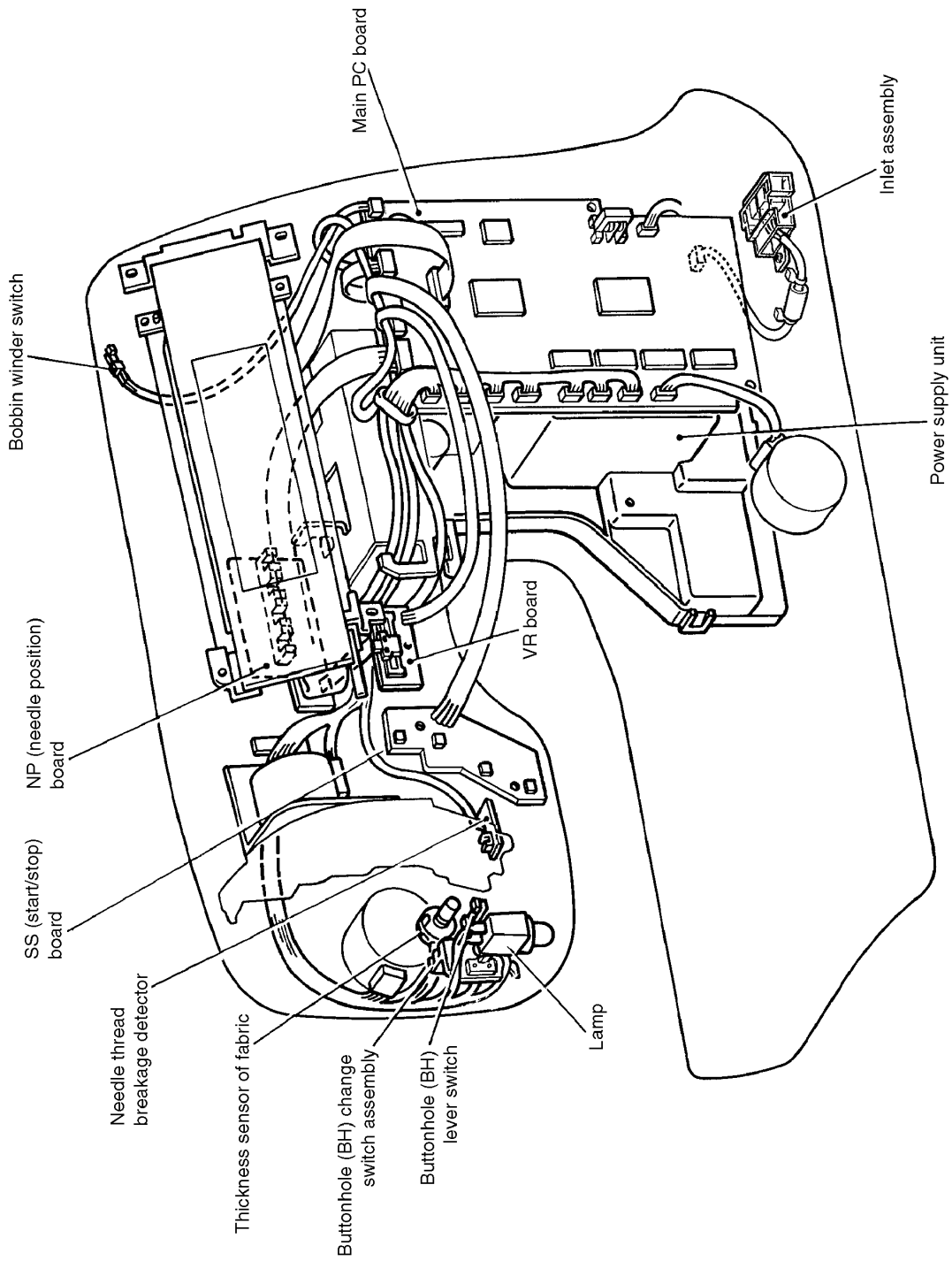

III. HOW TO ADJUST MECHANICAL ELEMENTS

1. SETTING THE TEST MODE....18
2. TENSION OF MOTOR BELT AND TIMING BELT....18
3. NEEDLE DOWN POSITION ADJUSTMENT....19
4. TIMING OF NEEDLE AND ROTARY HOOK (CLEARANCE BETWEEN THE NEEDLE AND THE ROTARY HOOK POINT)..19
5. NEEDLE BAR HEIGHT....20
6. LOWER SHAFT....20
7. FRONT/BACK, LEFT/RIGHT POSITION OF FEED DOG....21
8. HEIGHT OF FEED DOG....21
9. PRESSER BAR HEIGHT....22
10. CHECKING DETECTION OF FABRIC THICKNESS....22
11. POSITION OF BUTTONHOLE SWITCH LEVER....23
12. BOBBIN WINDER....23
13. INNER ROTARY HOOK BRACKET POSITION....24
14. LARGE ONE-POINT PATTERN SHAPE (SOFT ADJUSTMENT)....24
15. FEED ADJUSTMENT (VERTICAL FEED)....25
16. INNER ROTARY HOOK TENSION....25
17. NEEDLE THREADER....26
18. NEEDLE THREADER (CHECKING THE HOOK POSITION IN HORIZONTAL DIRECTION)....26
19. NEEDLE THREADER (EXCHANGE)....27
20. NEEDLE THREADER (CHECKING THE HOOK IN STANDARD POSITION)....27
21. NEEDLE THREADER (CHECKING THE HOOK POSITION IN VERTICAL DIRECTION)....28

1. SETTING THE TEST MODE

BASIC TEST MODES

To set the test mode, turn on the power switch while holding down the start/stop button and backtack button simultaneously. Numerals will appear on the touch panel. The respective test mode will be entered when the numeral is pressed.

Test Mode No.	Adjustment Item	Page
2	Checking detection of fabric thickness	22
3	Pattern	24, 25
4	Needle down position	19
5	Timing of needle and rotary hook	19
6	Horizontal position of feed dog	21

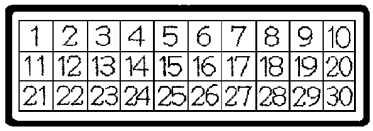

The other test modes are used for factory adjustments.

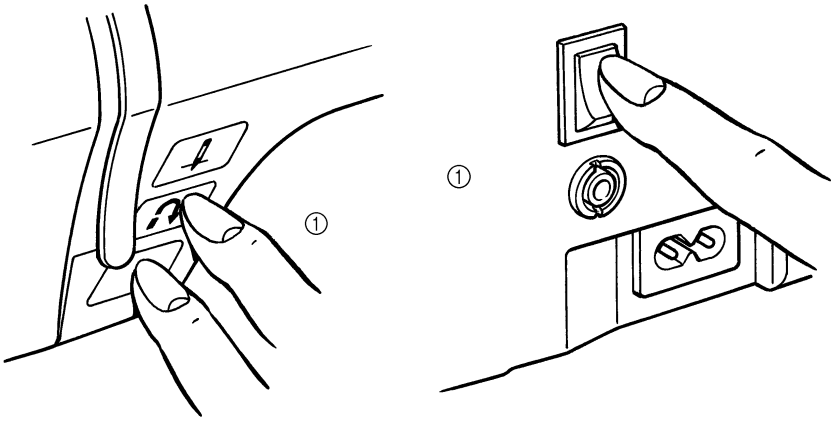

2. TENSION OF MOTOR BELT AND TIMING BELT

STANDARD

There should be a 4-6 mm slack in the motor belt when the center of the motor belt is pressed with a force of 200g.
There should be a 3-4 mm slack in the timing belt when it is pressed with a force of 200g.

ADJUSTMENT

Timing belt

1. Loosen the screw of the belt adjusting pulley.
2. Adjust the position of the belt adjusting pulley.
3. Tighten the screw of the belt adjusting pulley.

Motor belt

1. Loosen the two screws securing the motor holder.
2. Adjust the belt tension by moving the motor holder.
3. Tighten the two screws.

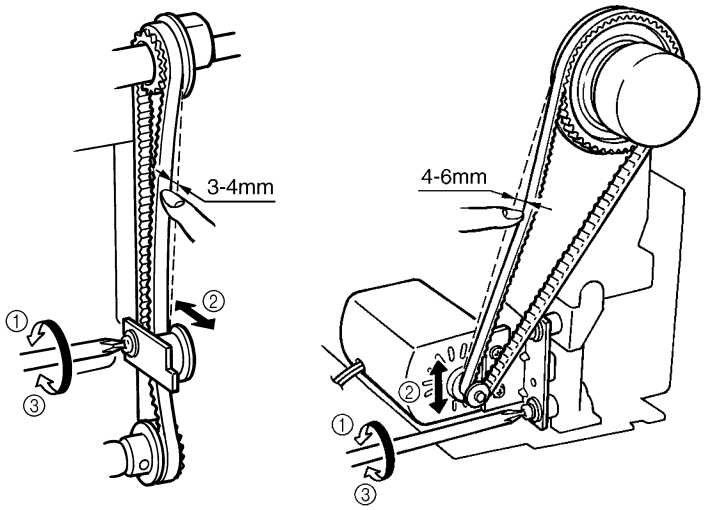

3. NEEDLE DOWN POSITION ADJUSTMENT

STANDARD

When test mode "4" is selected, the needle should be exactly at the middle of the needle plate hole in the needle down position.

ADJUSTMENT

1. Select test mode "4".
2. Turn the balance wheel to move the needle to the needle down position.
3. Loosen the screw securing the zigzag adjusting nut.
4. Turn the balance wheel to move the needle to the left and right, and then turn the zigzag adjusting nut by using the box wrench to set the needle in the center of the needle hole.
5. Tighten the screw securing the zigzag adjusting nut.
6. Turn the balance wheel and check the needle down position.

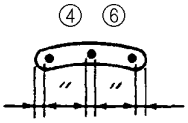

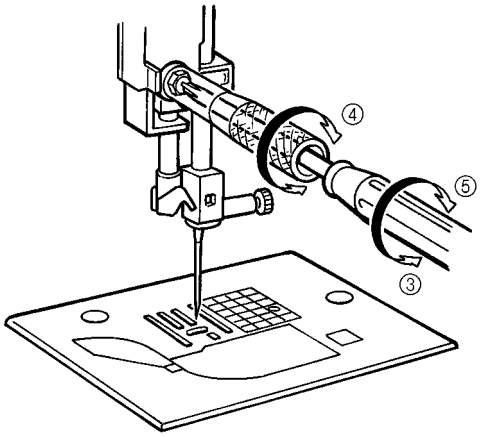

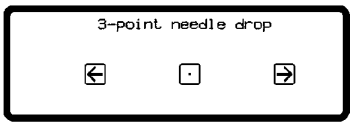

4. TIMING OF NEEDLE AND ROTARY HOOK (CLEARANCE BETWEEN THE NEEDLE AND THE ROTARY HOOK POINT)

STANDARD

When test mode "5" is selected and the needle is raised 2.9-3.3 mm from its lowest position, the rotary hook point should be positioned at the right side of the needle.
The clearance between the needle and the rotary hook point should be 0.1 mm or less, and they should never touch each other.

ADJUSTMENT

1. Select test mode "5".
2. Loosen the three screws of the lower shaft gear.
3. Adjust the clearance between the needle and the rotary hook. (When the needle is raised 2.9-3.3 mm from its lowest position, the rotary hook point should be positioned at the right side of the needle.)
4. Tighten the three screws of the lower shaft gear.
5. Turn the adjusting screw, and set the clearance between the needle and the rotary hook point to 0.1 mm or less. Make sure that the needle does not make contact with the rotary hook point.

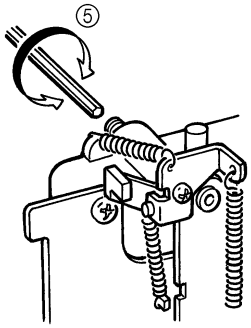

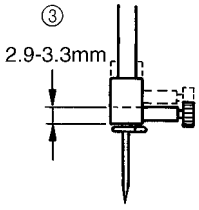

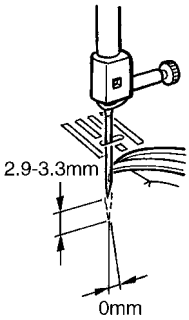

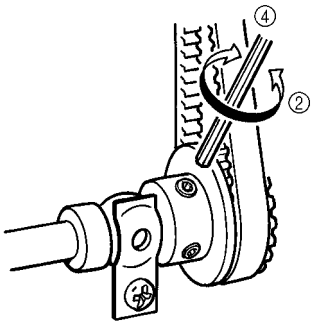

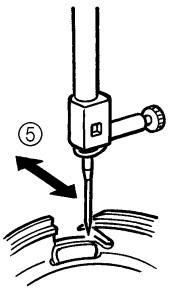

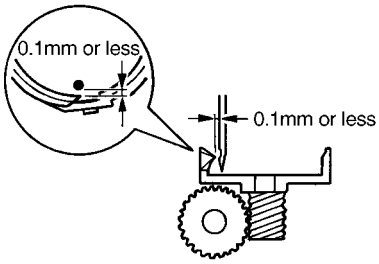

5. NEEDLE BAR HEIGHT

STANDARD

When test mode "5" is selected, turn the balance wheel so that the needle meets the rotary hook point. At this time, the clearance between the upper end of the needle eye and the bottom of the rotary hook point should be 1.0-1.4 mm.

ADJUSTMENT

1. Select test mode "5".
2. Turn the balance wheel so that the needle meets the rotary hook point.
3. Loosen the screw of the needle bar block assembly.
4. Move the needle bar vertically to adjust the clearance to between 1.0-1.4 mm.
5. Tighten the screw of the needle bar block assembly.

   NOTE: The needle clamp should be parallel to the side of the needle plate. If the needle bar is loose when you adjust the needle bar height, it may result in sewing troubles.

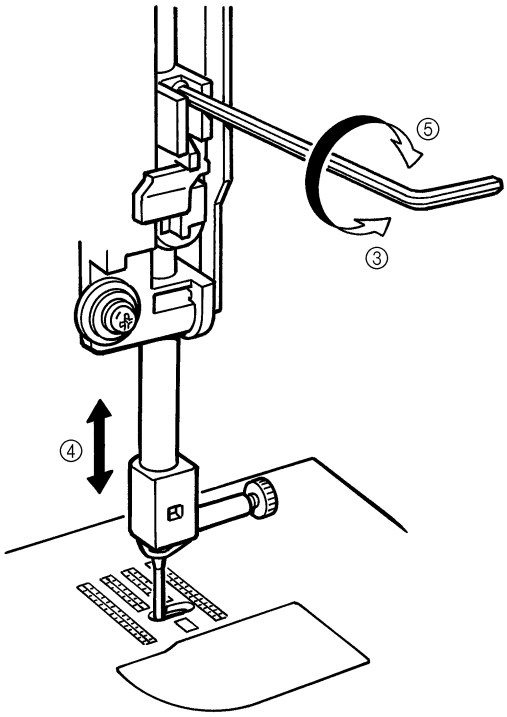

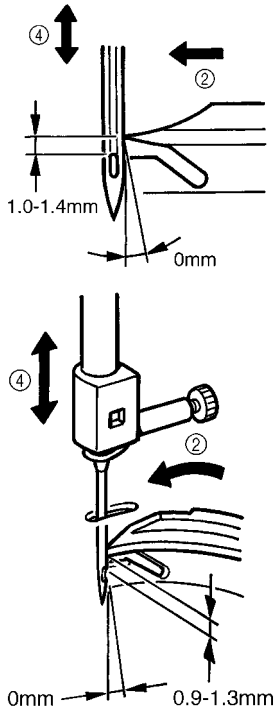

6. LOWER SHAFT

1. Attach the bushing presser L temporarily so as the center of lower shaft is positioned higher by 1 mm against the center of eccentric metal.
2. Install the outer rotary hook, then turn the eccentric metal and make sure that there is no backlash on the gears.
3. Tighten the screw on the bushing presser L.

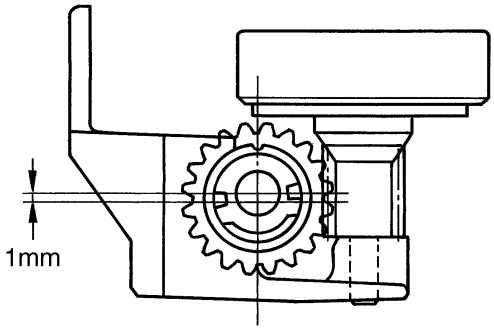

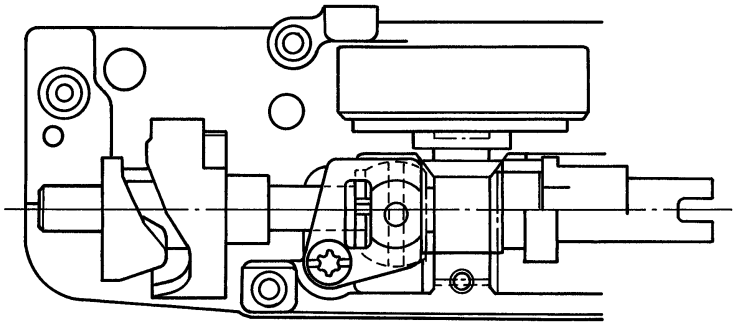

7. FRONT/BACK, LEFT/RIGHT POSITION OF FEED DOG

STANDARD

When test mode "6" is selected, move the feed dog front/back and left/right. At this time, the feed dog should not contact the needle plate.
When the front/back position is the maximum feed amount, the clearance between the feed dog and needle plate at the feed start position (when feed dog is at very front) should be 0.5 to 1.0. (Refer to illustration)

ADJUSTMENT

1. Select test mode "6".
2. Loosen the screw securing the horizontal feed plate.
3. In the test mode, align the feed dog's left/right position.
4. Tighten the screw securing the horizontal feed plate.
5. Move to the feed start position in the test mode.
6. Loosen the screw securing the horizontal feed arm.
7. Set the clearance between the feed dog and needle plate to 0.5 to 1.0.
8. Tighten the screw securing the horizontal feed arm.
9. After adjusting, press the thread cut button, and confirm that the thread cutter operates correctly. If the thread cutter does not operate, readjust the feed dog slightly to the back.

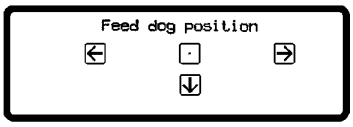

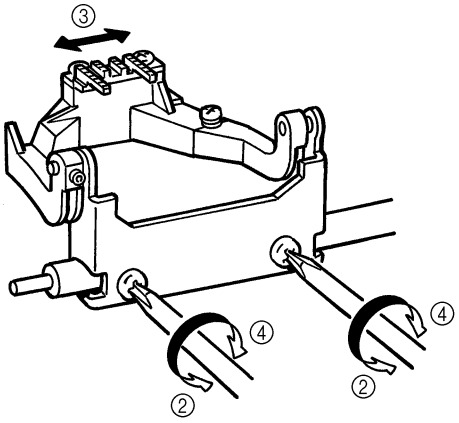

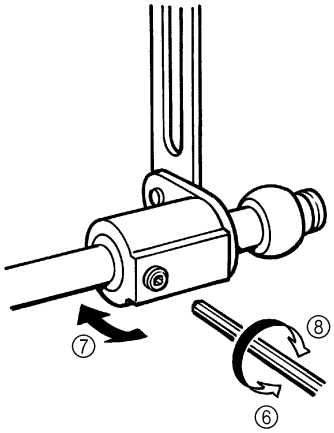

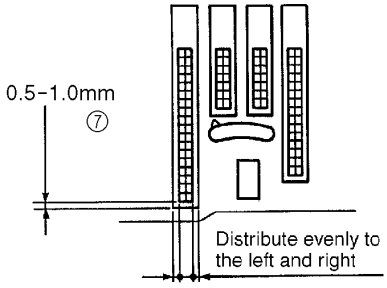

8. HEIGHT OF FEED DOG

STANDARD

When the balance wheel is turned to raise the feed dog to its highest position, the standard height of the feed dog above the needle plate should be 0.9-1.1 mm.

ADJUSTMENT

1. Turn the balance wheel to raise the feed dog to its highest position.
2. Loosen the screw securing the vertical feed roller shaft.
3. Turn the vertical feed roller shaft to adjust the feed dog height to within 0.9-1.1 mm.
4. Tighten the screw securing the vertical feed roller shaft.

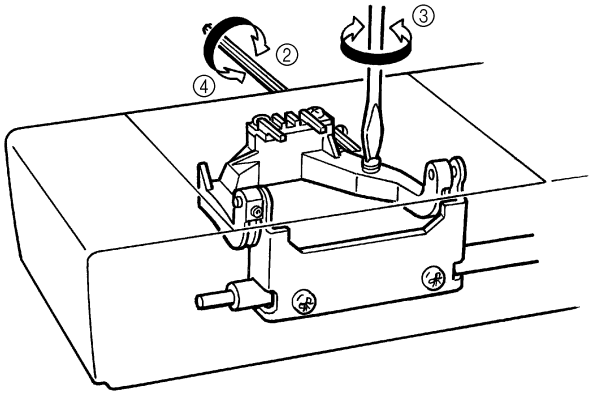

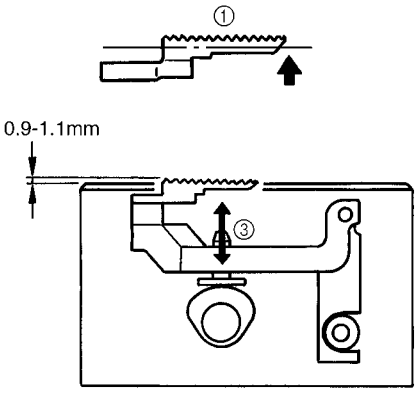

9. PRESSER BAR HEIGHT

STANDARD

The clearance from the needle plate top to the bottom of the presser bar should be 7.0-7.5 mm.

ADJUSTMENT

1. Raise the presser foot lifter.
2. Loosen the screw of the presser bar guide bracket.
3. Adjust the height of the presser bar by moving it vertically.
4. Tighten the screw of the presser bar guide bracket.
   NOTE: The presser foot should be parallel to the feed dog hole of the needle plate.

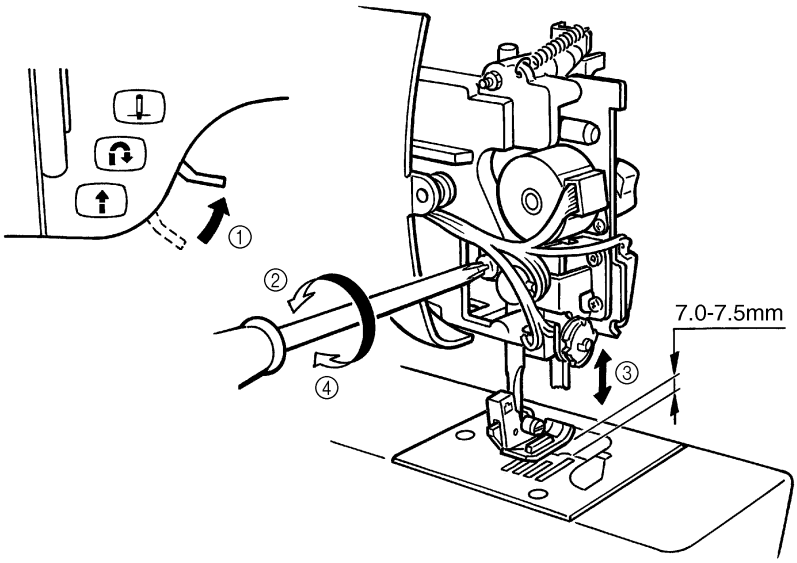

10. CHECKING DETECTION OF FABRIC THICKNESS

STANDARD

When the fabric thickness is set to 0 mm and 3 mm in test mode "2", the buzzer should sound twice if operation is normal.

ADJUSTMENT

1. Select test mode "2".
2. Install the J presser foot and then lower the presser foot and set the needle bar to the lowest position.
3. Press 0 mm on the display. (The buzzer should sound twice.)
4. Insert a spacer with a thickness of 3 mm beneath the J presser foot.
5. Press 3 mm on the display. (The buzzer should sound twice.)
   NOTE: If the values read in steps (3) and (5) are normal, the buzzer will sound twice each time. If they are not normal, the buzzer will sound four times each time.

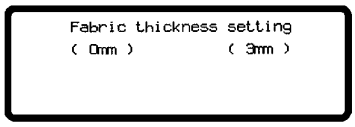

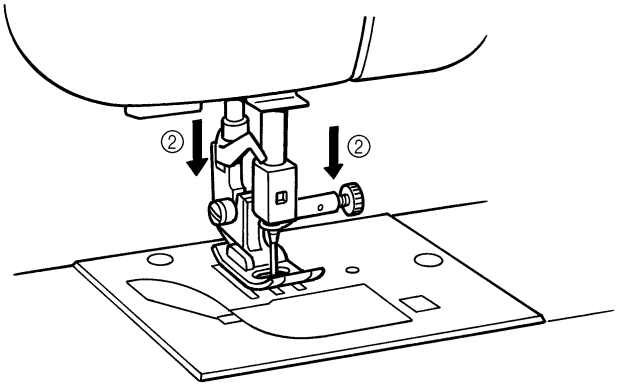

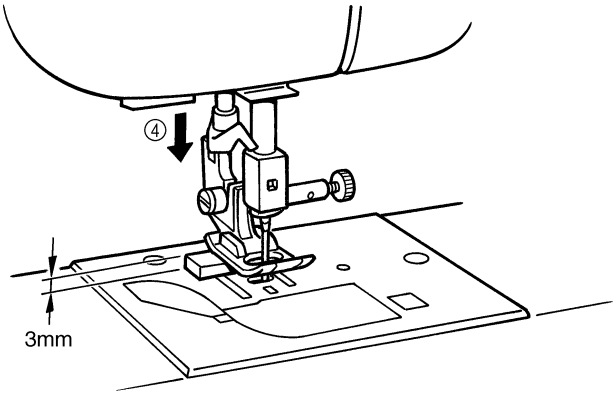

11. POSITION OF BUTTONHOLE SWITCH LEVER

STANDARD

When the buttonhole lever is lowered, the clearance of front part of buttonhole foot is 1.5 mm and the presser foot lever is lowered BH 0 should touch BH 1.

ADJUSTMENT

1. Turn on power switch and select pattern .
2. Fit the buttonhole foot (A). Adjust the clearance to 1.5 mm, and lower the presser foot lever.
3. Adjust the position of buttonhole lever so that BH0 touches BH1 when the buttonhole eccentric shaft is rotated.
   NOTE: In case that the legs are shorter than the standard, bend the BH 1 to be far from BH 0.
   In case that the legs are longer than the standard, bend the BH 2 to be close to BH 0.

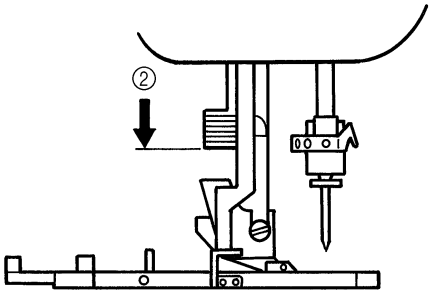

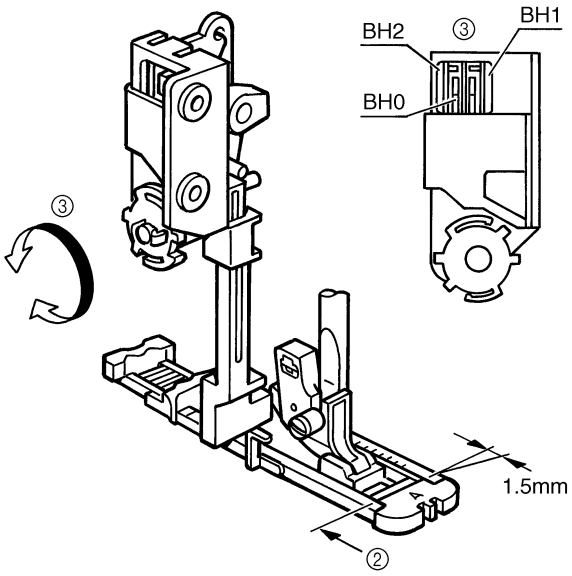

12. BOBBIN WINDER

STANDARD

The thread should be wound parallel to the bobbin and around about 85-90% of the bobbin at low speed.
The clearance between the bobbin winder switch and the bobbin winder assembly should be 0.5-1.0 mm.

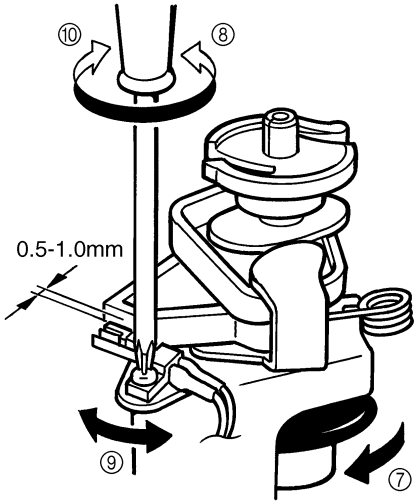

ADJUSTMENT

1. Loosen the bobbin winding guide screw.
2. Adjust the bobbin thread amount so that the thread is evenly wound around the bobbin by moving the bobbin winding guide vertically.
3. Tighten the bobbin winding guide screw.
4. Loosen the screw securing the bobbin presser slightly.
5. Turn the bobbin presser to adjust the bobbin thread amount.
6. Tighten the screw of the bobbin presser.
7. Set the bobbin winder assembly to the left.
8. Loosen the screw of the bobbin winder switch.
9. Adjust the clearance between the bobbin winder switch and the bobbin winder assembly to 0.5-1.0 mm.
10. Tighten the screw of the bobbin winder switch.

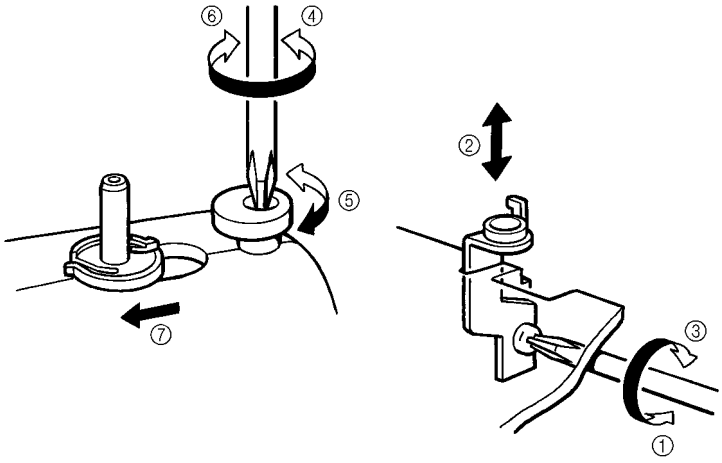

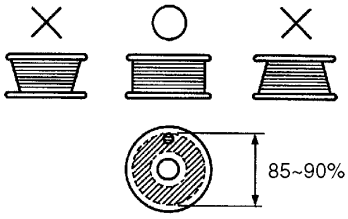

13. INNER ROTARY HOOK BRACKET POSITION

STANDARD

When the inner rotary hook bracket and the rotary hook meet, the spring of the inner rotary hook bracket and the inner rotary hook should overlap each other by 1.9-2.1 mm.

ADJUSTMENT

1. Loosen the screw securing the inner rotary hook bracket.
2. Adjust the position of the inner rotary hook bracket by moving it vertically and/or horizontally.
   NOTE: Surface A of the inner rotary hook bracket should be perpendicular to the feeding direction.
3. Tighten the screw of the inner rotary hook bracket.

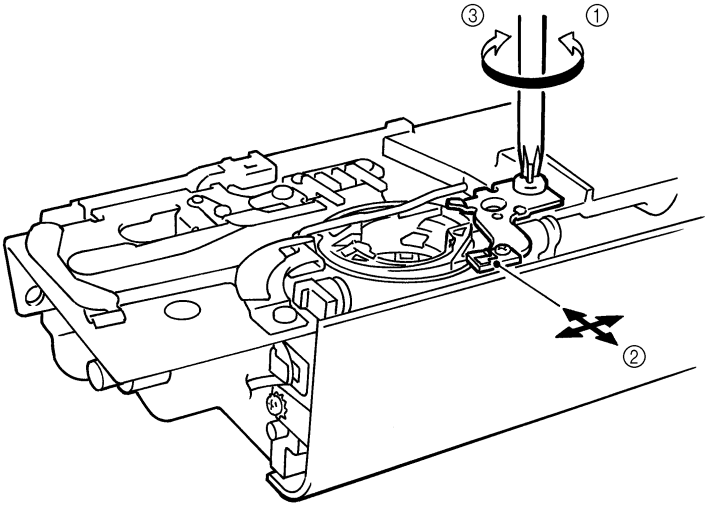

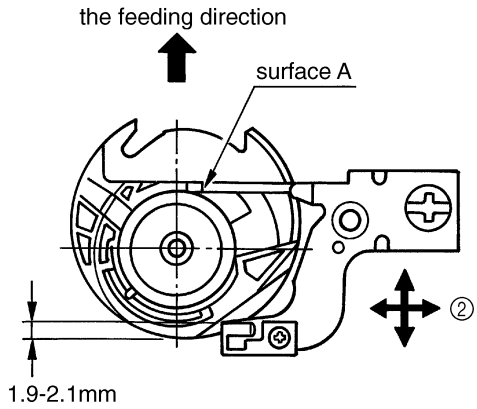

14. LARGE ONE-POINT PATTERN SHAPE (SOFT ADJUSTMENT)

STANDARD

When "3" pattern adjustment is selected in the test mode and the start button is pressed, the vertical and horizontal separation of the "pattern" outline shape should be 1 mm or less.

ADJUSTMENT

1. Select "3" pattern adjustment in the test mode.
2. Press the start button and sew the outline shape of the "pattern".
3. Adjust the pattern.

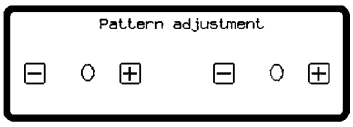

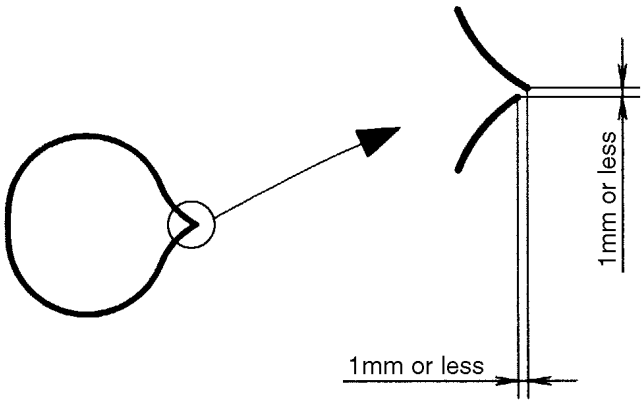

15. FEED ADJUSTMENT (VERTICAL FEED)

STANDARD

Adjustment of the pattern should be possible in test mode "3".

ADJUSTMENT

1. Loosen the screw securing the pulse motor.
2. Rotate the pulse motor and adjust the pattern.
   * Make sure not to contact the main PC board during the adjustment.
3. Tighten the screw securing the pulse motor.

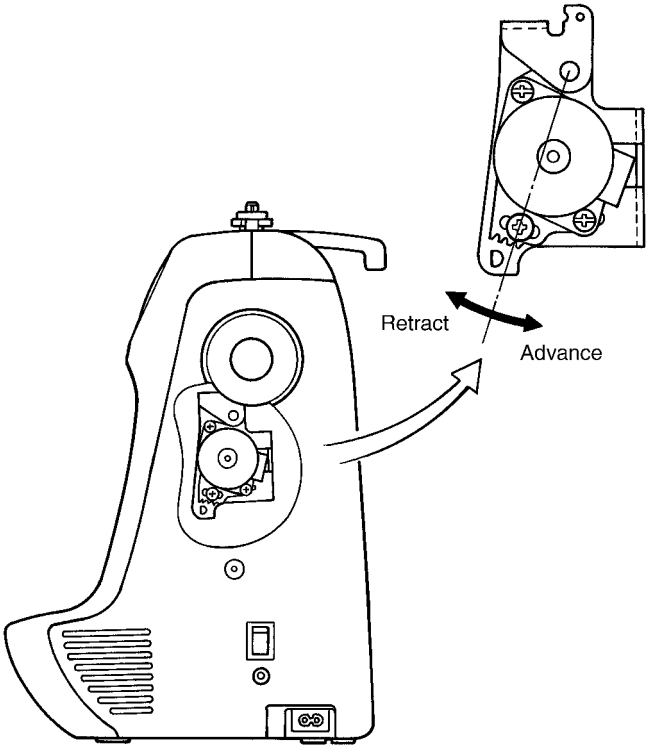

16. INNER ROTARY HOOK TENSION

STANDARD

While slowly pulling polyester thread #60 using a tension gauge, inner rotary hook tension should be 10-12g. The difference between this and the tension for silk thread (#80) should be 2-3g.

ADJUSTMENT

1. Pass polyester thread #60 through the inner rotary hook correctly, and pull it using the tension gauge.
2. Adjust the tension by turning the screw to either the right or left using a screwdriver.
   NOTE: After adjusting the tension, lock the screw with paint.

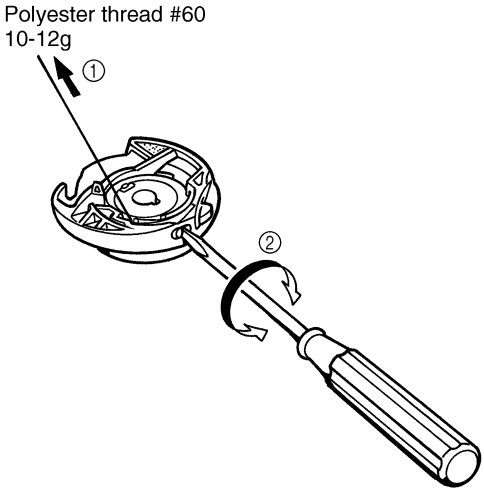

17. NEEDLE THREADER

USING THE NEEDLE THREADER

There are a wide variety of different needles and sewing machine threads available. The right ones should be selected in accordance with the sewing conditions. The accessory needle threader is designed to make threading of needles easier, but it cannot handle every single circumstance of use (combinations of needle and thread) that may occur. It can be used with some combinations but not with others, and if it can be used, the pattern may not be sewn correctly due to the particular sewing conditions. Do not use the needle threader without gaining a thorough understanding of how to use it, otherwise the needle threader may be damaged or needle threading may not be possible. Be sure to read and understand the following so that you can handle customer complaints.

NOTE:

1. Needle threader accepts only circled needle and thread combinations.
2. Combinations marked with a * are not recommended since they might lead to the breakage of needle threader imperfect performance.
3. Lower the presser foot when you use needle threader.
4. Nylon transparent thread is applicable in needle #14-16.
5. Do not turn the balance wheel when using needle threader.
6. Do not lower the needle threader lever while the machine is running. If it is lowered, the needle threader may be broken, rendering it unusable. Besides this, it may cause the needle to break, which could result in injury.
7. If a #9 needle is used, the variation in needle precision may result in the needle being slightly difficult to thread.
8. Needle should be located above needle plate by more than 8 mm for threading.
9. Needle threader does not work when you use the side-cutter.
   Thread the needle before attaching the side cutter.

Needle \ Thread	#30	#50	#60	#80	#100	#120
#9	×	×	×	O	O	O
#11	×	×	O	O	O	*
#14	×	O	O	O	*	*
#16	*	O	O	*	*	*
#18	*	*	*	*	*	*

18. NEEDLE THREADER (CHECKING THE HOOK POSITION IN HORIZONTAL DIRECTION)

STANDARD

The measure from inside of the hook guard to the center point of hook is 0.42 mm.

CHECK

As sewing needle HA X1 (#14) is standard, so prepare five brand-new sewing needles HA X1 (#14) and check by changing all of these.

After Checking,

1. In case that, hook goes through eyelet of all needles ..... There is no problem.
2. In case that, hook does not go through eyelet of all needles ..... Adjust by bending hook.
3. In case that, hook does not go through eyelet of some needles .... Needles through which the hook does not go through are defective.

(Example for checking)
When you check five brand-new sewing needles HA X1 (#9) on condition that it achieves above first case, if the hook does not go through eyelet of all of these needle, all five needles are defective and you judge the hook position is not defective.

ADJUSTMENT

In case the hook is defective after above checking, adjust the hook by bending with pliers. Do not bend the hook guard at this time.

19. NEEDLE THREADER (EXCHANGE)

HOW TO EXCHANGE NEEDLE THREADER

1. Remove the needle and lower the presser foot.
2. Push down the needle threader and take it out.
3. Place a new one so that the guide is immediately under the groove as shown in figure Ⓐ.
4. Push the needle threader all the way up so that the guide is fits into the groove.

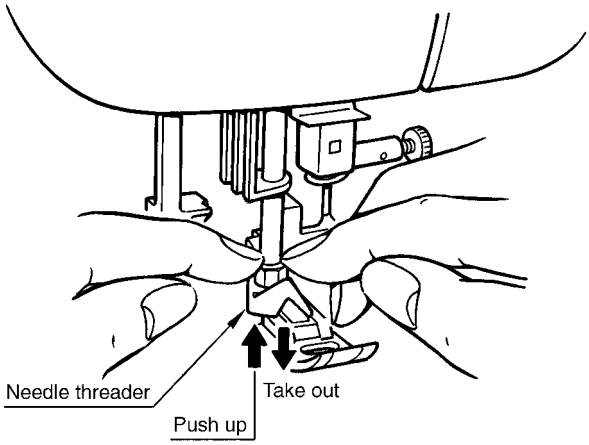

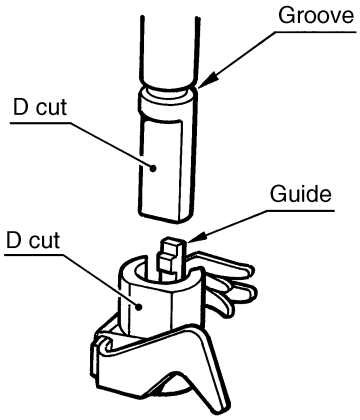

Figure Ⓐ

20. NEEDLE THREADER (CHECKING THE HOOK IN STANDARD POSITION)

STANDARD

1. The clearance between the top of hook and the top of needle eye is 0 mm.
2. Threading is possible when needle is located higher than 8 mm from the needle plate.

CHECK (refer to illustration)

Case A
Hook position is too high. (Hook hits needle and cannot go through needle eye.)
Case B
Hook position is too low. (Hook goes through needle eye but it catches bottom part of needle eye.)

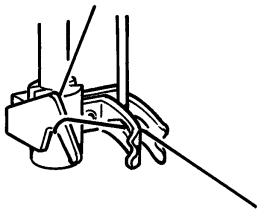

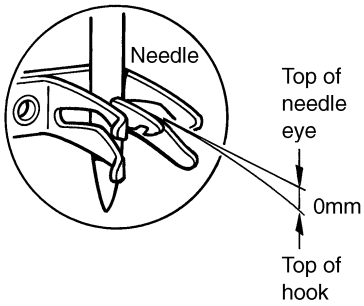

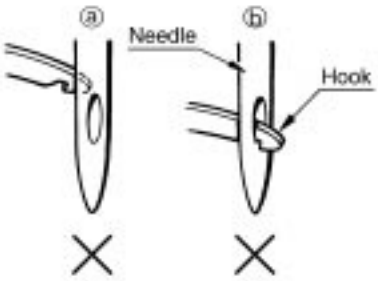

21. NEEDLE THREADER (CHECKING THE HOOK POSITION IN VERTICAL DIRECTION)

Case A
Adjust needle threader position setter slightly down and check that the clearance between the top of hook and top of needle eye is 0 mm.
Case B (Hook point is too low)
Adjust needle threader position setter slightly up and check the clearance between the top of hook and top of needle eye is 0 mm.

Check that the needle threader position setter ⓐ and the needle bar crank rod assembly ⓑ is parallel.
In case part ⓐ and part ⓑ is not parallel or the hook does not work, readjust needle threader by loosening the screw.

If ⓐ and ⓑ are not parallel, the needle threader will not be held by the needle threader position setter (refer to Fig. 1), the hook will not enter the eyelet of the needle (hook will not move) and the needle will not be threaded when the needle threader lever is lowered. In this case, loosen the screw securing the needle threader position setter and turn the needle threader position setter slightly to the left to make it parallel.
In addition, if the needle threader position setter is turned too far so that it is still not parallel too left, it may hit other parts, causing damage (refer to Fig. 2). If a part is damaged, it must be replaced. If no part is damaged, loosen the screw securing the needle threader position setter and turn the needle threader position setter slightly to the right to make it parallel.

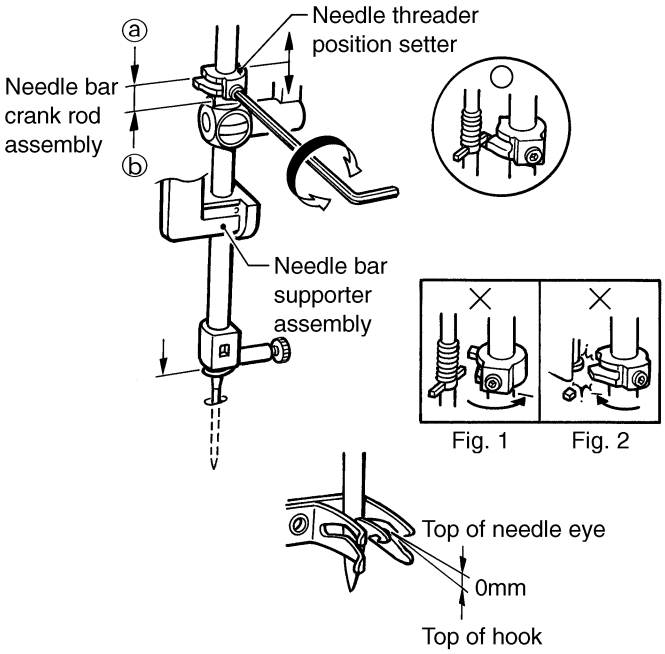

IV. HOW TO ADJUST ELECTRONIC ELEMENTS

1. When power is turned on, buzzer does not sound and nothing appears on display 30
2. After the power is turned on, pulse motors do not return to their home positions with respect to the needle position. 30
3. Pattern cannot be selected 30
4. Main motor does not run 30
5. Operation of main motor is not stable, maximum speed operation is not possible, or speed cannot be adjusted 31
6. Correct patterns are not created 31
7. Buttonholes are not stitched correctly 31
8. Manual operation of feed and zigzag pulse motors is not possible 31
9. Vertical movement of needle bar and backstitch operation are abnormal 31
10. Foot controller does not operate normally when depressed 31
11. Thread tension is not correct 32
12. Needle bar release mechanism does not operate correctly 32
13. Thread cutter does not operate correctly 32
14. Display does not appear clearly 32
15. The LCD light does not light 32
16. Thread cannot be wound around bobbin 32
17. Needle thread breakage detector does not operate correctly 32

HOW TO ADJUST ELECTRONIC ELEMENT

∗ You must turn off the power and remove connectors from printed circuit boards before measuring resistance.

PROBLEM	CHECK	REMEDY
1. When power is turned on, buzzer does not sound and nothing appears on display.	1) Has the display contrast been adjusted? 2) If the voltage between both inlet terminals is measured when the power cord is plugged in, is the standard voltage (120 VAC, 220V, 230V, 240V) displayed? 3) When power switch is set to on, is resistance between both ends less than 1 Ω? 4) Remove connector CN13 from the power supply board, and check following voltages using a tester: Voltage between pins 2 and 3 should be 5 VDC. Voltage between pins 4 and 5 should be 20 to 30 VDC. 5) Is fuse blown? 6) Others	1) Adjust the contrast. 2) Replace the power cord. 3) Replace power supply unit assembly. 4) Replace power supply unit assembly. 5) Replace fuse after correcting defect that caused fuse to blow. 6) Replace main PC board assembly.
2. After the power is turned on, pulse motors do not return to their home positions with respect to the needle position. (Zigzag pulse motor when needle bar is raised and feed and side feed pulse motors when needle bar is lowered.)	1) Are the resistances between the connector pins given below normal for the pulse motors which do not return to the home position? Zigzag (CN2)..... 1-3, 2-4 → 8-10 Ω Feed (CN4)..... 1-3, 2-4 → 8-10 Ω Horizontal (CN1)..... 1-3, 2-4 → 8-10 Ω 2) Set the home position for the same pulse motors irrespective of needle position. 3) Is a fuse blown? 4) Is the voltage between pins 4-5 normal when the connector (CN13) which is output from the power supply board is disconnected? Between 4-5 20-30 VDC 5) Others	1) Replace the pulse motor which shows an abnormality. 2) Replace NP board assembly. 3) Replace fuse after correcting defect that caused fuse to blow. 4) Replace power supply unit assembly. 5) Replace main PC board assembly.
3. Pattern cannot be selected.	1) Does switch on SS PC board remain pressed? 2) When the foot controller is connected, does it remain depressed? 3) Others	1) Adjust or exchange SS PC board assembly. 2) Check foot control unit operation. 3) Replace LCD module, or main PC board.
4. Main motor does not run.	1) Does balance wheel rotate easily? 2) Is main motor connector (CN2 on power supply unit) attached properly? 3) Is resistance of both ends on main motor connector (CN2 on power supply unit) 120V spec 30-50Ω or 220-240V spec 110-150Ω? 4) Do start/stop switch, backstitch switch, needle position switch, and thread cutter switch operate correctly? Resistances between ends of each switch should be; under 1Ω when switch is pressed. infinite when switch is released. 5) Is presser foot lifter lowered? Does presser foot switch operate correctly? When presser foot lifter is lowered, voltage between pins 2-1 of fabric thickness detector (CN6) is under 2VDC. When presser foot lifter is raised, it is over 3VDC. 6) Others	1) Adjust mechanical positions to reduce the heavy torque. 2) Check connector connection. 3) Replace main motor. 4) Replace SS PC board assembly. 5) Check fabric thickness detection or replace fabric thickness sensor assembly. 6) Replace main PC board or power supply unit assembly.

5. Operation of main motor is not stable, maximum speed operation is not possible, or speed cannot be adjusted.	1) When turning on power and moving speed slide, does voltage between pins 3 and 2 of connector CN10 (for speed slide) change from 0 to 5 VDC? 2) When turning balance wheel, do voltages between pins 2-1, pins 4-1, pins 5-1, and 6-1 of connector CN5 (for NP board) change to either 0 or 5 VDC? 3) Others	1) Replace VR board assembly. 2) Replace NP board assembly. 3) Replace main PC board.
6. Correct patterns are not created.	1) If the power is turned off and the needle bar is moved horizontally by hand, does it move easily? 2) Are the resistances between the connector pins for the zigzag, feed and side feed pulse motors normal? Zigzag (CN2)..... 1-3, 2-4 → 8-10 Ω Feed (CN4)..... 1-3, 2-4 → 8-10 Ω Side feed (CN1)..... 1-3, 2-4 → 8-10 Ω 3) Do the voltages between pins 2-1, 5-1 and 6-1 of the N.P. board assembly connector (CN5) alternate between 0-5 VDC when the sewing machine is turned slowly? 4) Others	1) Adjust the installation position so that it moves easily. 2) Replace pulse motor or lead wire assembly. 3) Replace NP board assembly. 4) Replace main PC board assembly.
7. Buttonholes are not stitched correctly.	1) Is the stitch foot set correctly? 2) Is the resistance between pins 4-5 of the BH switch connector (CN7) normal? When buttonhole lever is lowered .... 1 Ω or less When buttonhole lever is raised ..... ∞ 3) When the buttonhole lever is lowered and in the conditions below, is the resistance between pins 1-2 and 2-3 of the BH switch connector (CN7) normal? Between 1-2 Between 2-3 Buttonhole lever is pulled forward.....1 Ω or less ∞ Buttonhole lever is pushed back..... ∞ 1 Ω or less 4) Others	1) Check stitch foot. 2) Adjust button hole lever or replace BH switch assembly. 3) Adjust button hole lever or replace BH switch assembly. 4) Replace main PC board assembly.
8. Manual operation of feed and zigzag pulse motors is not possible.	1) Do manual keys of feed and zigzag pulse motors turn off and on normally, and do the LCDs change? 2) Are the resistances between the pins below of the feed and zigzag pulse motors normal? Feed (CN4)..... 1-3, 2-4 → 8-10 Ω Zigzag (CN2)..... 1-3, 2-4 → 8-10 Ω 3) Others	1) Replace LCD module. 2) Replace feed stepping motor, zigzag stepping motor or lead wire assembly. 3) Replace main PC board assembly.
9. Vertical movement of needle bar and backstitch operation are abnormal.	1) Are the resistances between both sides of the SS PC board assembly switches 1 Ω or less and in the k Ω range respectively when the switches are turned on and off? 2) Do the voltages between pins 2-1, 4-1, 5-1 and 6-1 of the NP board assembly connector (CN5) alternate between 0-5V when the sewing machine is turned slowly? 3) Is the bobbin winder switch turned off? 4) Others	1) Replace SS PC board assembly. 2) Replace NP board assembly. 3) Adjust the bobbin winder mechanism. 4) Replace main PC board assembly.
10. Foot controller does not operate normally when depressed.	1) Is the resistance between pins 2-3 of the pin jack connector (CN14) 1 Ω or less when there is no pin jack and ∞ when there is a pin jack? 2) Does the resistance between pins 1-3 of the pin jack connector (CN14) change from the low Ω range to 10 k Ω when there is a pin jack and the foot controller is depressed? 3) Others	1) Replace pin jack assembly. 2) Replace foot controller or jack assembly. 3) Replace main PC board assembly.

11. Thread tension is not correct.	1) Is thread route correct? 2) Are the 0 mm and 3 mm fabric thickness adjustments correct? 3) Turn off power and lower presser foot. When turning AT pulse motor gear manually, does it turn easily, and together with roller? 4) Are resistances between pins 1-3 and pins 2-4 of connector CN3 (for AT pulse motor) 8 to 10 Ω? 5) Is the voltage between pins 2-1 of the connector (CN6) for the fabric thickness detection under 2 VDC when the presser foot is lowered and over 3 VDC when it is raised? 6) Others	1) Check thread route. 2) Check. 3) Adjust or replace ATPM holder complete. 4) Replace AT pulse motor or ATPM lead wire assembly. 5) Replace thickness sensor of fabric assembly. 6) Replace main PC board.
12. Needle bar release mechanism does not operate correctly.	1) Does needle bar release mechanism operate smoothly? 2) Are resistances between pins 1-3 and 2-4 of connector CN2 (for zigzag pulse motor) 8 to 10 Ω? 3) Others	1) Adjust needle bar release mechanism. 2) Replace Z pulse motor or ZPM lead wire assembly. 3) Replace main PC board assembly.
13. Thread cutter does not operate correctly.	1) Does the thread cutter move lightly? 2) Are resistances between pins 1-3 and 2-4 of connector CN4 (for feed pulse motor) 8 to 10 Ω? 3) Others	1) Adjust the thread cutter mechanism. 2) Replace F pulse motor or FPM lead wire assembly. 3) Replace main PC board assembly.
14. Display does not appear clearly.	1) Is the voltage between pins 8-7 of the connector (CN9) for LCD module -5 to -10VDC? 2) Others	1) Replace main PC board assembly. 2) Replace LCD module or main PC board assembly.
15. The LCD light does not light.	1) Is the voltage between pins 4-5 20 to 30 VDC when the connector (CN7) which is output from the power board is disconnected? 2) Is fuse blown? 3) Is the voltage between pins 9-10 of the LCD module connector (CN9) approx. 9 VDC? 4) Others	1) Replace the power board assembly. 2) Replace fuse after correctly defect that caused fuse to blow. 3) Replace main PC board assembly. 4) Replace LCD module assembly.
16. Thread cannot be wound around bobbin.	1) Is resistance between both ends of connector CN15 (for bobbin winder switch) under 1 Ω when thread is wound, or infinity in other cases? 2) Is bobbin winder attached correctly? 3) Others	1) Replace bobbin winder switch assembly. 2) Adjust bobbin winder position. 3) Replace main PC board.
17. Needle thread breakage detector does not operate correctly.	1) When passing thread through thread route and setting thread condition as follows, is voltage between pins 2-1 of connector CN8 (for needle thread breakage detector) correct? When thread is tensioned... 0 VDC When thread is loose..... 5 VDC 2) Others	1) If condition does not change after adjusting thread take-up spring, replace needle thread breakage detecting PC board. 2) Replace main PC board.

Main PC board

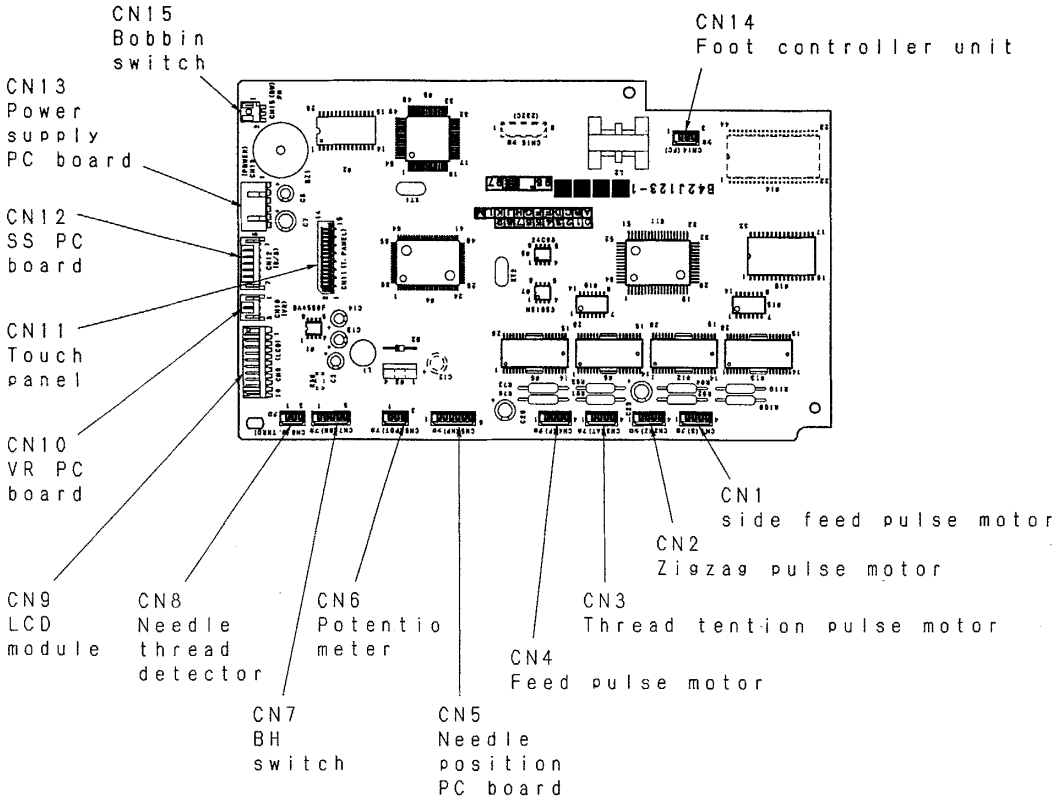

Power supply unit

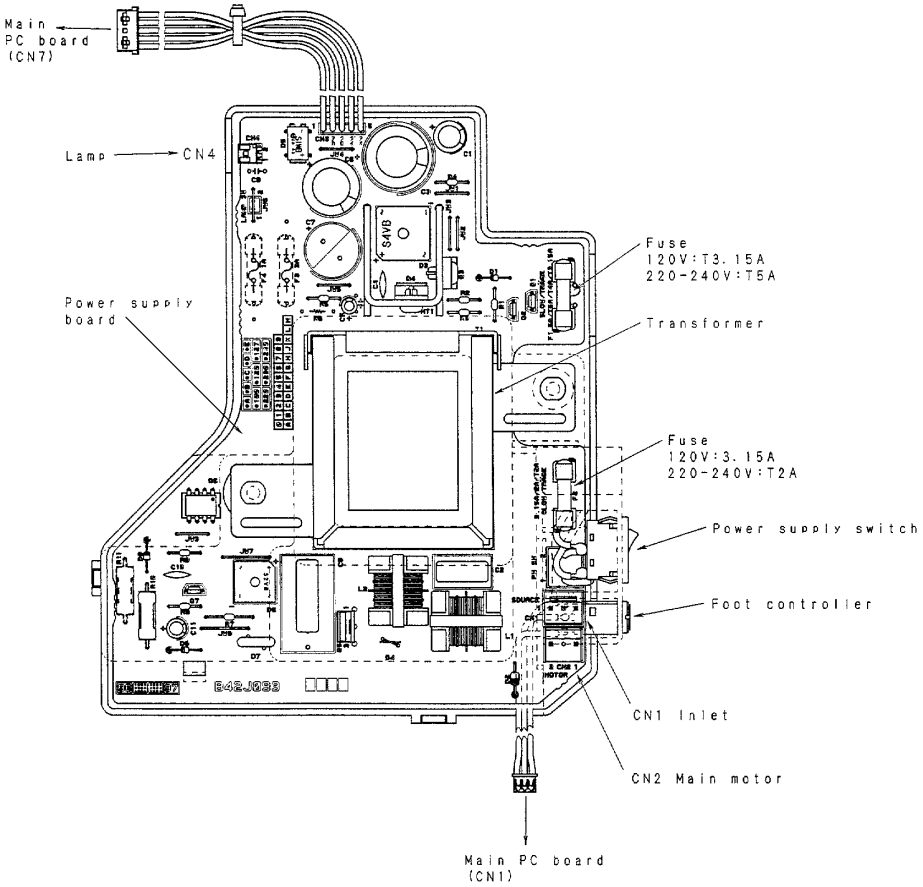

LCD unit

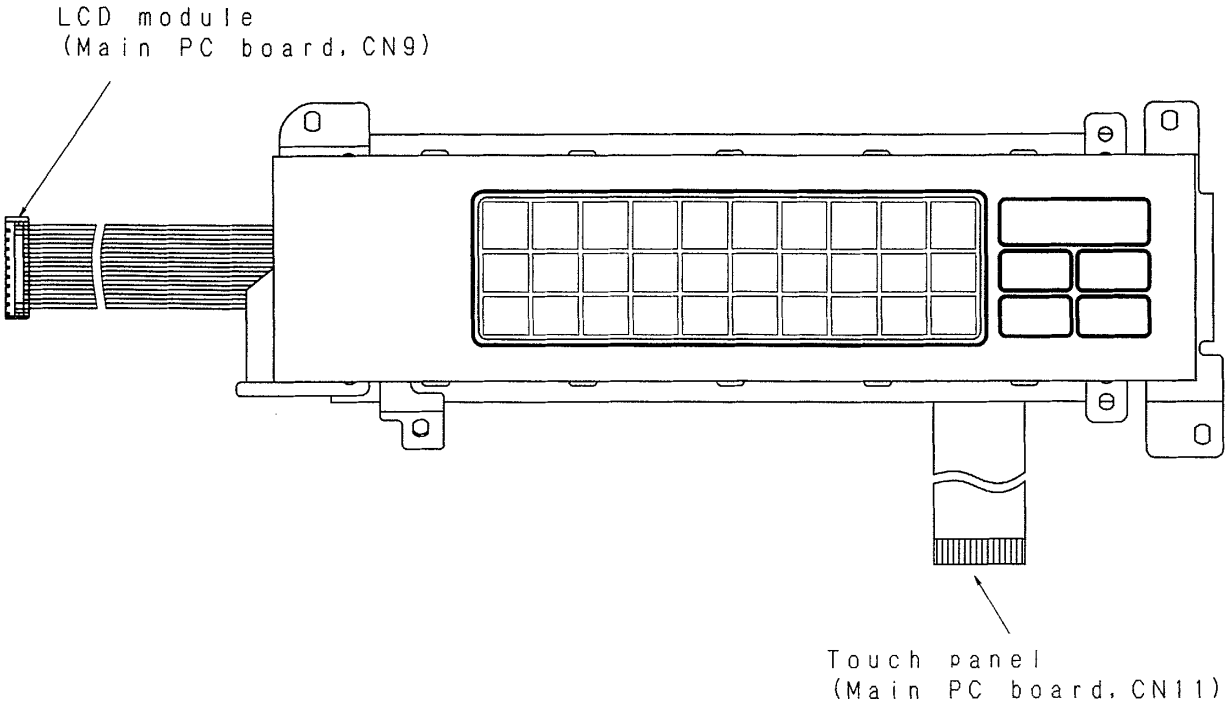

Other PC boards (985)

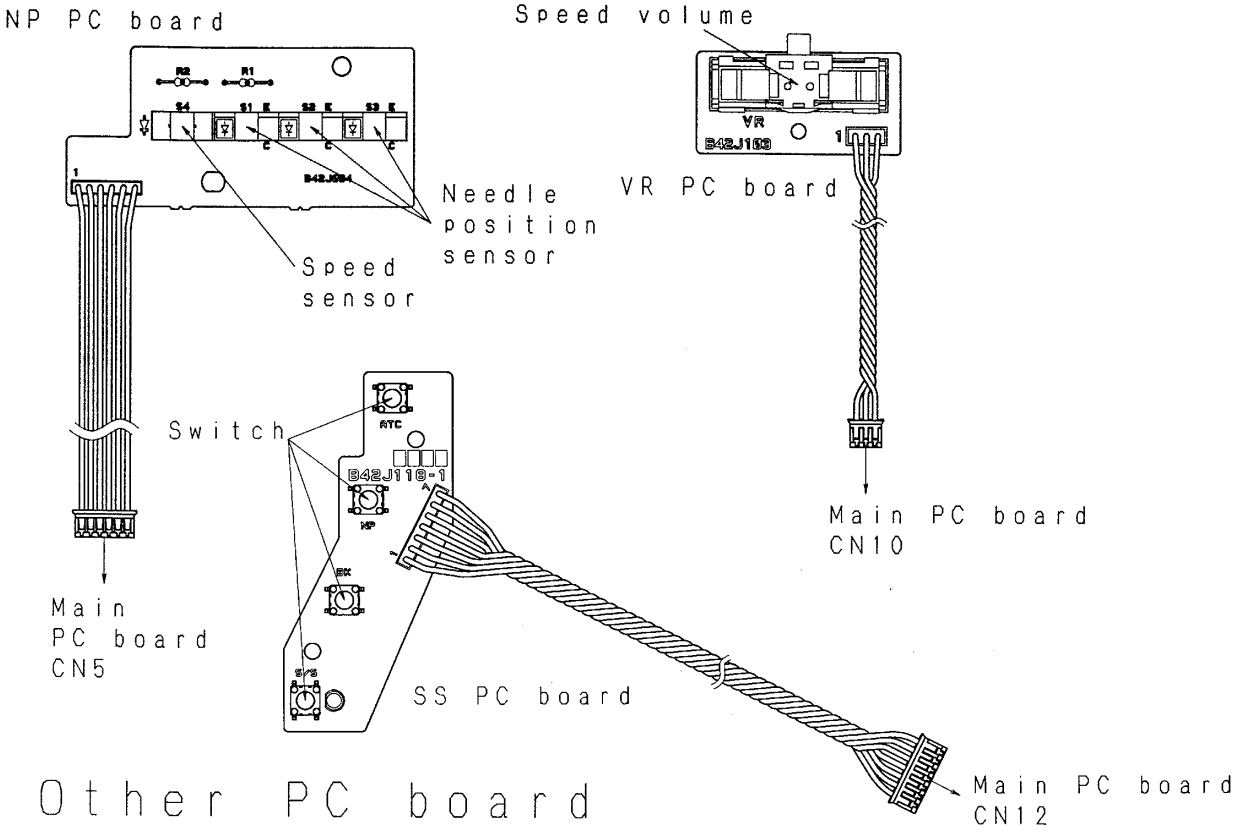

PC6000
SUPER ACE I
H7060087