PARTS CATALOGUE FOR

PE300S

P1000

6.2002.
6.2004.

CONTENTS

(1) PRINCIPAL PARTS 2

(2) NEEDLE BAR, PRESSER BAR AND ZIGZAG 4

(3) UPPER SHAFT, THREAD TAKE-UP LEVER,
VERTICAL SHAFT AND BOBBIN WINDER 6

(4) FEED MECHANISM AND ROTARY HOOK ASSY..... 8

(5) NEEDLE THREADER 10

(6) LAMP, MAIN PC BOARD ASSY AND
MOTOR UNIT 12

(7) EMBROIDERY UNIT 14

(8) OTHER PARTS 16

(1) PRINCIPAL PARTS

No.	CODE	NAME	REMARKS
1	XA5062051	Set plate A	
2	X57908051	Screw S4 × 10	
3	XA5063151	Set plate B	
4	XA5541000	Handle guide	
5	060400616	Screw 4 × 6	
6	XA5542001	Handle assembly	
7	XA5067053	Rear cover	
8	XA6692051	Spool stand bar	
9	XA5069051	Spool stand bar shaft	
10	XA5762051	Presser plate	
11	087300517	Screw 3 × 5	
12	X59864151	Bobbin presser	
13	052301606	Screw 3 × 16	
14	021300106	Nut 3	
15	XA5070151	Spool guide assembly	
16	0A4300806	Screw 3 × 8	
17	021300106	Nut 3	
18	XA5072101	Thread guide plate assembly	
19	XA5076001	Thread guide plate	
20	052300606	Screw 3 × 6	
21	136681051	Screw B3 × 8	
22	XA5077051	Slide lever	
23	XA5078051	Spring	
24	XA5079051	Slide lever shaft	
25	XA5525051	Washer	
26	130157051	Rubber cushion	
27	XZ0047051	Leaf spring	
28	087411416	Screw B4 × 14	
29	XA5083051	SV key top	
30	XA5084000	SV joint plate	
31	XA5092151	SS button	
32	XA5093051	Reverse sewing	
33	XA5094051	NP button	
34	XC0392051	Assy SSVR	
35	XA5085050	Thread guide wire	
36	XA5086201	Thread guide bar sub assy	
37	XC0394051	Assy UTHD	
38	XA5089151	Spring	
39	XA5090001	Thread cutting shutter	
40	XA5091001	Thread cutting shutter cover	
41	120454051	Retaining ring CS3	
42	XA5680050	Thread guard	
43	XA7890050	Front cover thread guard	
44	138337051	Rubber cushion A	

No.	CODE	NAME	REMARKS
45	026350235	Washer 3.5	
46	083361216	Screw B3.5 × 10	
47	XA5082053	FRONT COVER	CHG
	XA5082055	FRONT COVER (P1000)	ADD
48	087411416	Screw B4 × 14	
49	060400816	Screw 4 × 8	
50	XA6549051	Face plate assy	
51	X51895051	FACE PLATE BUSH	ADD
52	X80321001	NT thread cutter assembly	
53	138384051	Retaining ring CS5	
54	0A4400806	Screw 4 × 8 DA	
55	XA6551051	ARM COVER ASSY	CHG
	XA6551053	ARM COVER ASSY (P1000)	ADD
56	XA5105051	Accessory case	
57	X55260152	Spool cap C	
58	XA6038051	Front cover spacer A	
59	XA6039051	Front cover spacer B	
60	XA6040051	Spring tape	
61	XA5517050	Rubber	
62	XA6567001	DECORATION PLATE FOR PE-300S	CHG

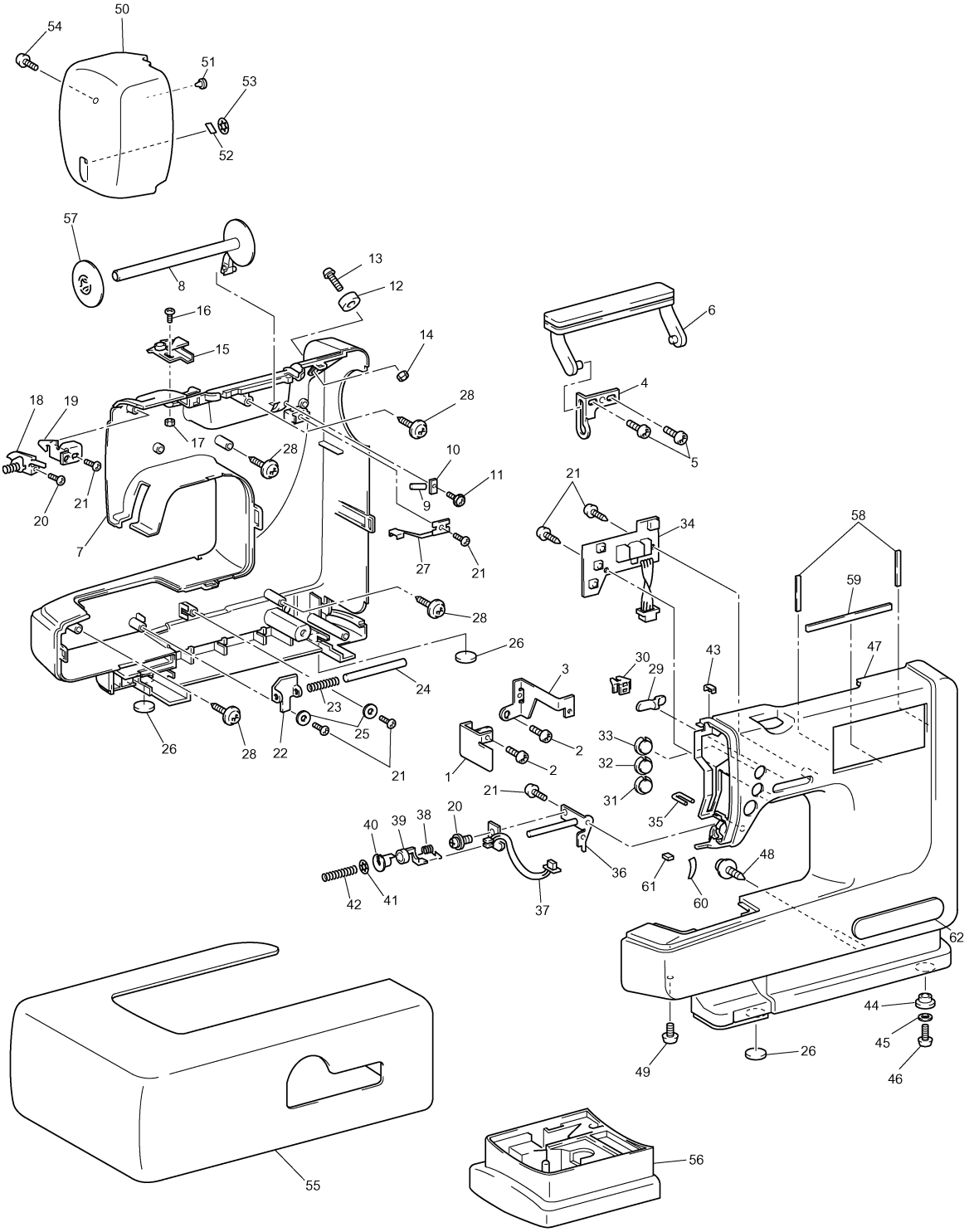
50
54
51
53
52
57
8
13
12
16
15
14
6
4
5
18
19
17
28
10
11
9
20
21
7
27
34
58
59
26
24
23
25
22
3
30
29
43
47
33
32
31
35
1
2
40
39
38
36
61
60
48
42
41
37
62
44
45
46
49
55
56

(2) NEEDLE BAR, PRESSER BAR AND ZIGZAG

No.	CODE	NAME	REMARKS
1	XA5116151	Thread guide assembly	
2	XA5129251	Needle bar assembly	
3	XA5132150	Needle bar thread guide	
4	014300332	Screw 3 × 3	
5	XA5133251	Screw	
6	XA5134051	Needle bar block assy	
7	014400432	Screw 4 × 4	
8	XA7670051	Positioning supporter	
9	012400432	Screw 4 × 4	
10	XA5779051	Pin	
11	014401232	Screw 4 × 12	
12	X56851051	Nut	
13	XA8540051	Spring	
14	XA5138151	H shaft holder sub assy	
15	XA5247051	Thread guide	
16	0A5300806	Screw 3 × 8 DB	
17	X57908051	Screw S4 × 10	
18	X51927050	Needle bar supporter arm	
19	048020346	Stop ring E2	
20	XA1854051	Threader hook assembly	
21	XC0413051	Needle plate assembly	
22	X80321001	NT thread cutter assembly	
23	X56828151	Needle plate cover	
24	X50487051	Screw M4	
25	XZ0046051	STOPPER	ADD
26	XA5153051	Presser bar	
27	XA5154051	Presser bar bracket	
28	014401032	Screw M4 × 10	
29	XA5155051	Spring	
30	XA5156151	Presser foot lifter	
31	XA5157151	Stud for presser foot lifter	
32	XC3015051	PRESSER FEED HOLDER ASSY	CHG
33	132730151	Screw 3.57	
34	X51953051	Zigzag presser foot	
35	XA5166051	BH switch base plate	
36	XA5158051	BH switch assembly	
37	060300616	Screw 3 × 6	
38	XA5206151	ZPM holder sub assembly	
39	Z26551051	Z PULSE MOTOR	CHG
40	060300416	Screw 3 × 4	
41	XA5212051	Release lever	
42	XA5213151	Spring	
43	048025346	Stop ring E2.5	
44	XA6018000	Z gear	
45	XA5215201	Zigzag connecting rod	
46	XA5989000	Zigzag nut	
47	062300806	Screw 3 × 8	
48	XA5216251	Assy, PF switch	
49	062260516	Screw 2.6 × 5	
50	XA5475051	Assy, Lead wire for Z pm	
51	XA6019101	Z gear arm assembly	
52	XA6022051	Spring	
53	048020346	Stop ring E2	

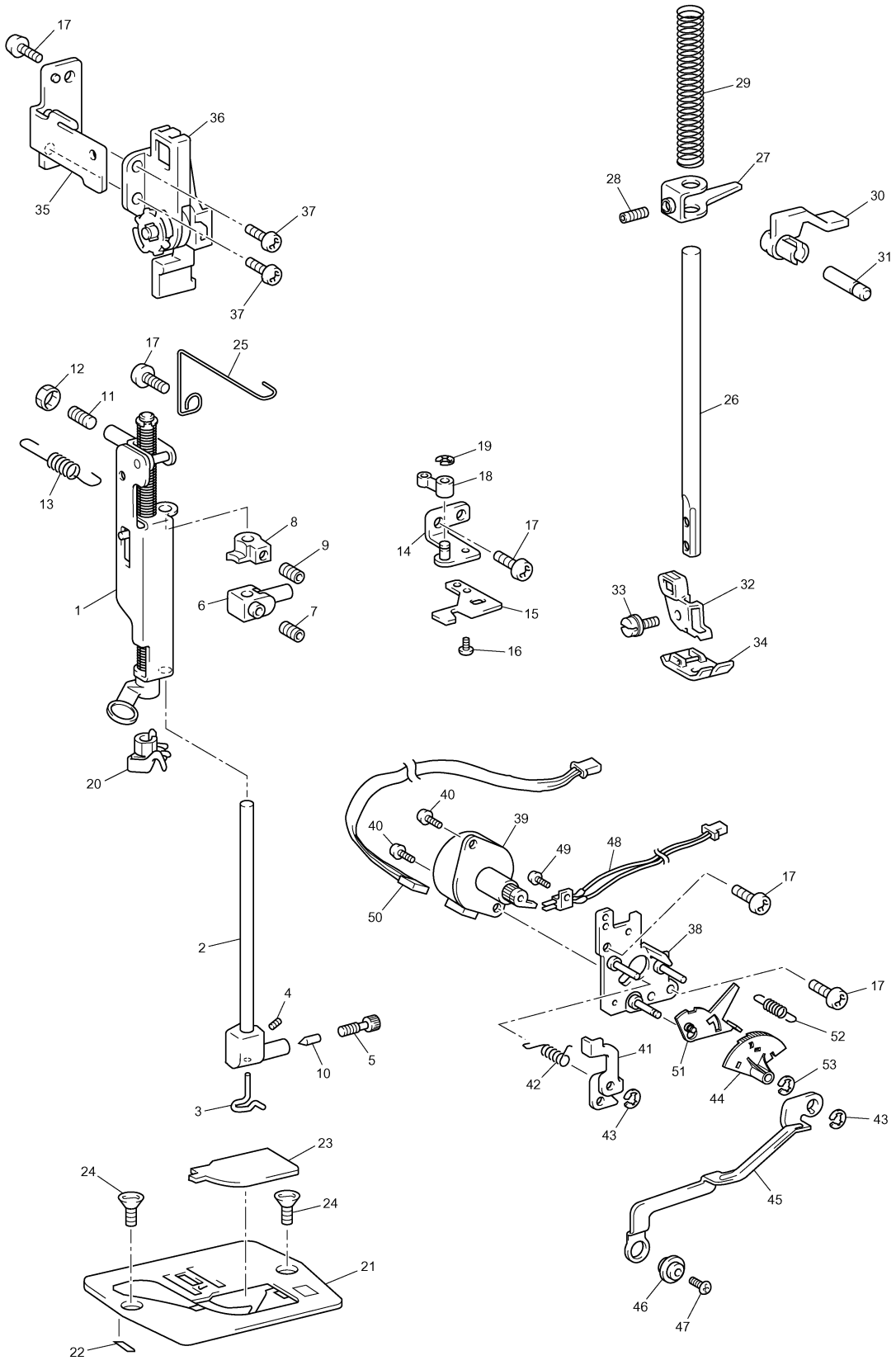
17
36
35
37
37
29
27
28
30
31
17
25
12
11
26
13
19
18
8
9
17
14
1
6
7
15
33
32
16
34
20
40
40
39
49
48
17
50
38
2
17
4
52
5
10
41
51
53
42
44
3
43
43
23
24
24
45
21
46
47
22

(3) UPPER SHAFT, THREAD TAKE-UP LEVER, VERTICAL SHAFT AND BOBBIN WINDER

No.	CODE	NAME	REMARKS
1	X81086051	Upper shaft assembly	
2	XA5109151	Pulley	
3	048060346	Stop ring E6	
4	X55154050	Upper shaft gear	
5	014500532	Screw 5 × 5	
6	X52664050	LOWER SHAFT BUSHING	CHG
7	X51383050	WASHER, THRUST	CHG
8	048060346	Stop ring E6	
9	XA5114050	Thread take-up counter weight	
10	012500532	Screw 5 × 5	
11	132421051	Bushing presser	
12	X57908051	Screw S4 × 10	
13	XA6110001	Thread take-up lever	
14	XA5703200	Thread presser plate	
15	XA1387051	Screw 2 × 3	
16	XA7624051	Take-up lever shaft	
17	048050346	Stop ring E5	
18	XA0649051	Screw S4 × 16	
19	X55193151	Needle bar crank assembly	
20	X55197050	Needle bar crank rod	
21	048040346	Stop ring E4	
22	XA4255151	Vertical shaft sub assy	
23	X51383050	WASHER, THRUST	CHG
24	137768151	Set screw collar	
25	014400432	Screw 4 × 4	
26	XA5221001	Vertical shaft pulley	
27	XA5222051	Timing shutter	
28	132421051	Bushing presser	
29	XA5223051	Bobbin winder plate A assembly	
30	XA5225051	Bobbin winder pulley assembly	
31	XA5230151	Bobbin winder spring plate	
32	XA6037001	Set plate	
33	XA5231251	Bobbin winder spring	
34	XA5232151	Assy, BW switch	
35	062260516	Screw 2.6 × 5	
36	060400816	Screw 4 × 8	
37	XA1866051	Washer, spring	

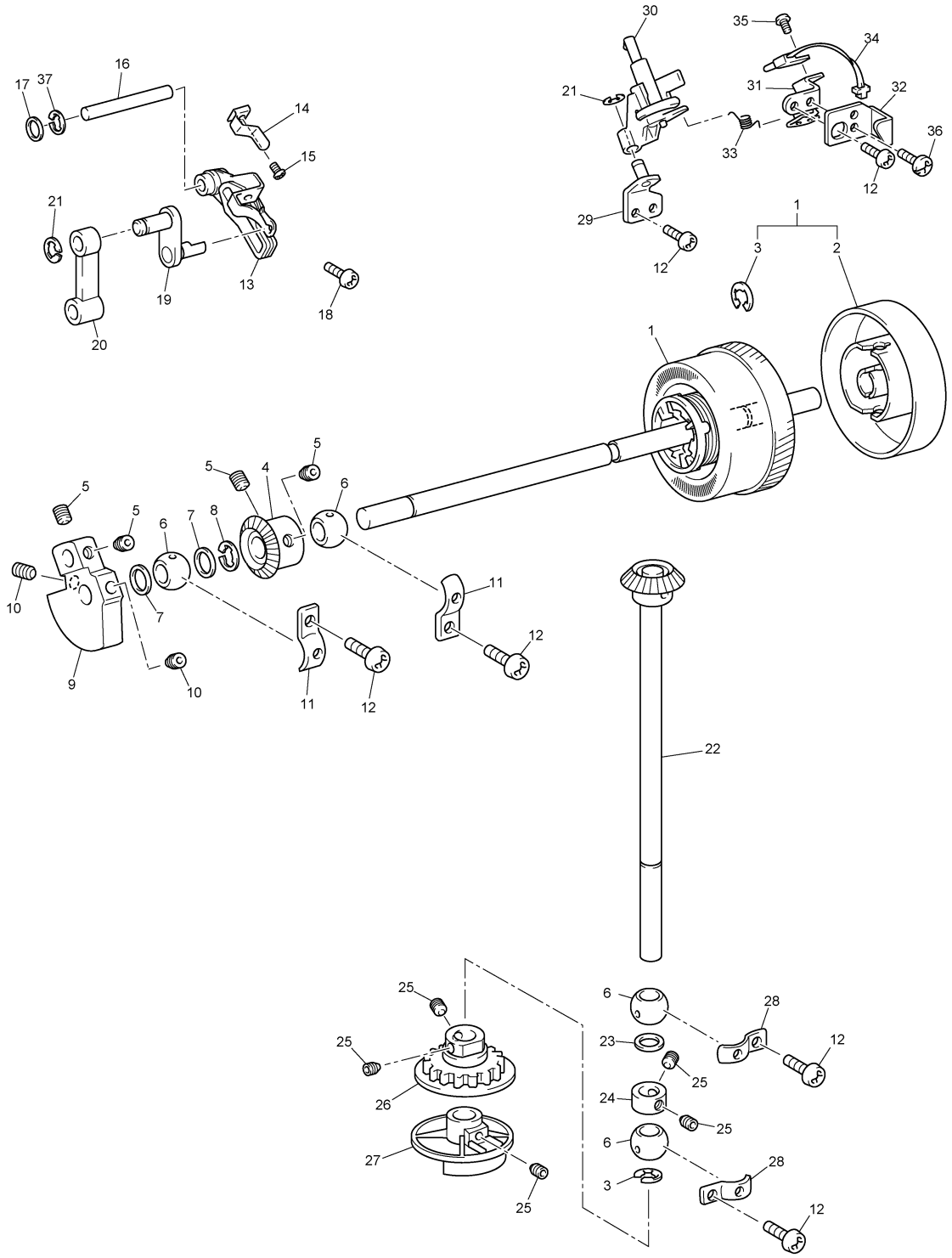
30
35
34
16
17
37
21
31
32
14
33
36
15
12
21
29
1
12
3
2
19
13
18
20
1
5
5
4
5
6
5
6
7
8
10
7
11
12
9
10
11
12
22
25
6
28
25
23
12
25
26
24
25
6
27
28
3
25
12

(4) FEED MECHANISM AND ROTARY HOOK ASSY

No.	CODE	NAME	REMARKS
1	XA5167250	FPM holder	
2	Z26555051	Z PULSE MOTOR	CHG
3	XA5169251	Initial plate	
4	XA2189050	Initial rubber	
5	052300606	Screw 3 × 6	
6	X57908051	Screw S4 × 10	
7	XA5168051	Assy lead wire for F PM	
8	XA5171101	Feed gear	
9	XA5172051	Feed bar	
10	XA5173051	Spring	
11	XA5174151	Guide shaft	
12	060300416	Screw 3 × 4	
13	XA7270051	Feed dog	
14	XA5175051	Horizontal feed shaft	
15	X53027050	Washer	
16	048040346	Stop ring E4	
17	014400632	Screw 4 × 6	
18	XA5176051	Guide pin holder assembly	
19	XA8871051	Up-down feed arm assembly	
20	XA5184050	Bush	
21	048030346	Stop ring E3	
22	XA8873050	Drop lever	
23	XA5186051	Spring	
24	XA5187050	Collar	
25	131976051	Washer	
26	0A4403005	Screw 4 × 30 DA	
27	XA5189051	Drop holder sub assy	
28	X53027050	Washer	
29	XA5192051	Drop plate assembly	
30	XA5195051	Drop knob	
31	XA5196051	Spring	
32	XA5197051	Drop knob shaft	
33	XA5611001	Spring, plate	
34	X55323051	Timing belt 150 XL 015	
35	XA6305051	Belt tension pulley assembly	
36	XA8474051	Upset 4 × 12 DB	
37	XA5203151	Outer rotary hook assembly	
38	XA5619151	Inner rotary hook assembly	
39	XA0360151	OUTER ROTERY HOOK SHAFT	CHG
40	XA2190050	Washer U	
41	XA0361050	Washer	
42	XZ0127051	INNER ROTARY HOOK BRACKET ASSY	CHG
43	060400816	Screw 4 × 8	
44	XA6105000	Bush	
45	XA6263051	Spring	
46	XA6319051	Supporting pulley assembly	
47	060400616	Screw M4 × 6	

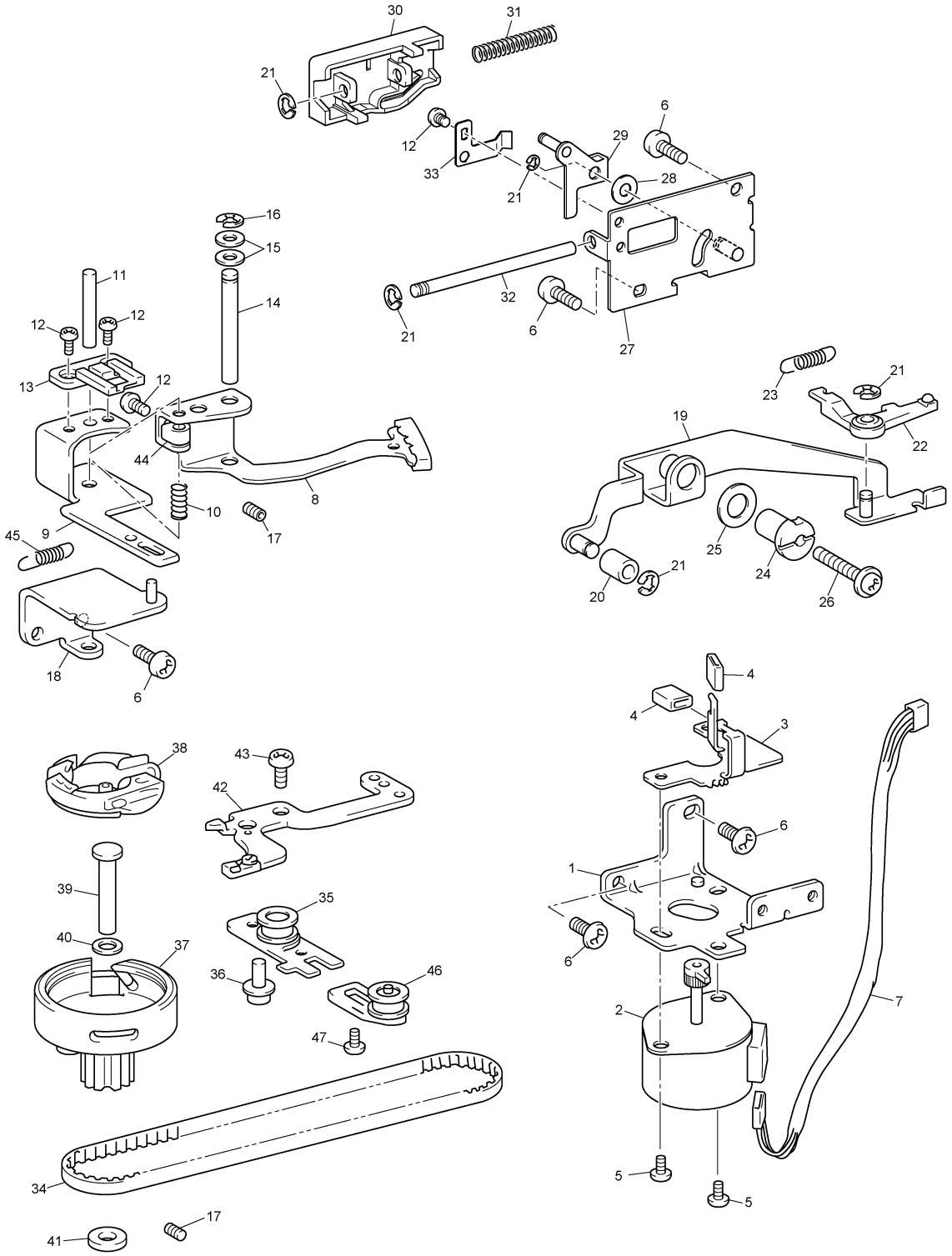
30
31
21
12
33
29
6
28
21
16
15
11
14
12
12
13
12
44
8
10
17
9
45
18
6
32
21
6
27
23
21
19
22
25
24
21
20
26
4
4
3
38
43
42
6
1
39
35
40
37
36
46
6
2
7
47
34
5
5
41
17

(5) NEEDLE THREADER

No.	CODE	NAME	REMARKS
1	XA5064101	Thread tension unit holder	
2	XA5235051	Thread tension bracket assembly	
3	XA0083051	Thread tension disk	
4	XA0084051	Thread tension disk	
5	109763053	Washer	
6	XA5238051	Thread tension plate A	
7	137881051	Tension disk washer	
8	XA7640051	Spring	
9	137878051	Thread tension adjusting screw	
10	XA5239051	Thread tension plate assembly	
11	XA5242152	THREAD TENSION DIAL	CHG
	XA5242153	THREAD TENSION DIAL (P1000)	ADD
12	XZ0133050	Washer	
13	137991051	Washer	
14	025040133	Washer 4	
15	048030346	Stop ring E3	
16	060300616	Screw 3 × 6	
17	X57908051	Screw S4 × 10	
18	XA5243051	Thread release plate B assy	
19	XA5246051	Spring	
20	060300816	Screw M3 × 8	
21	XA6026001	Cord guide plate	

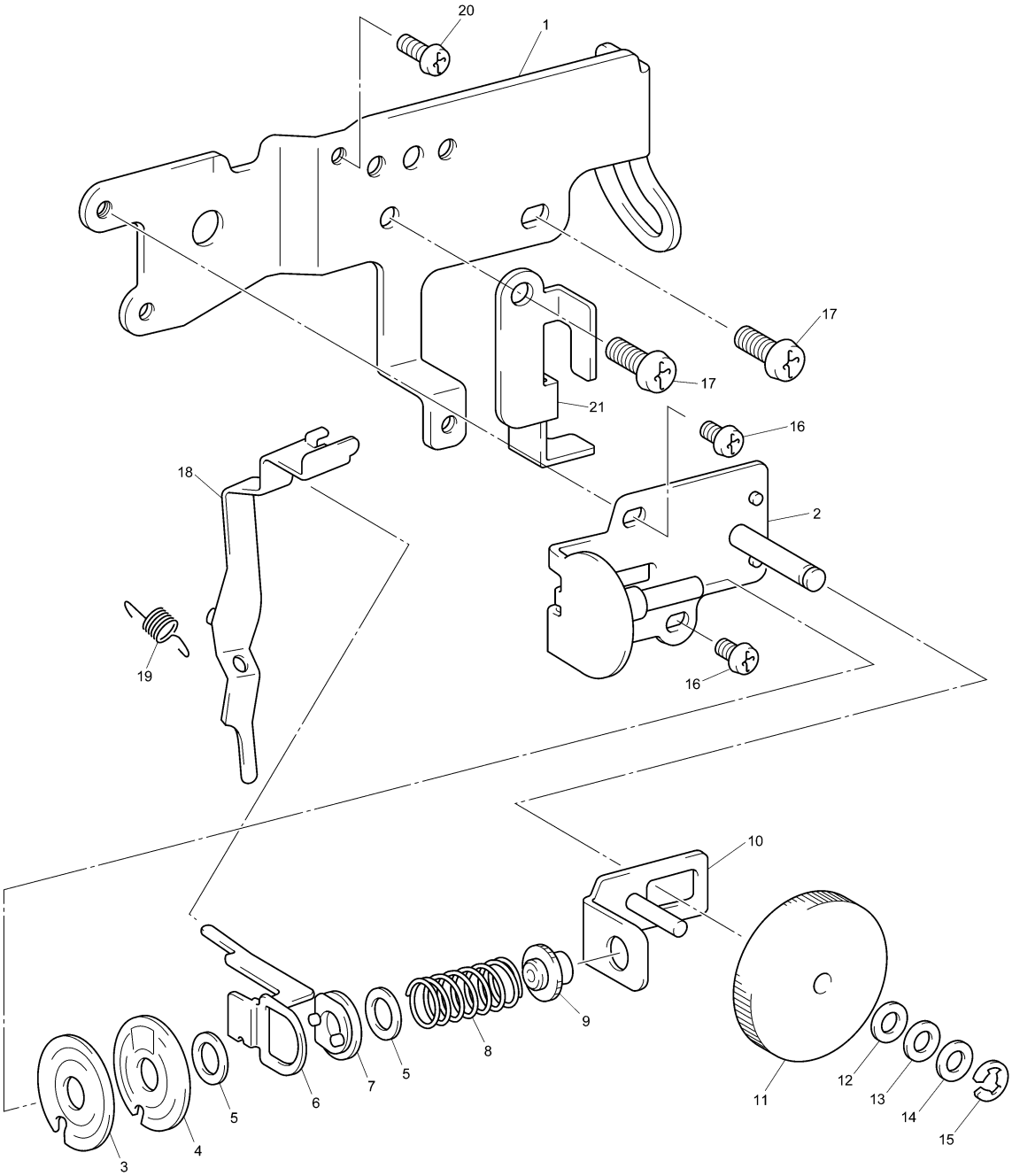
20
1
17
17
21
16
18
2
19
16
10
9
8
7
5
6
5
4
3
11
12
13
14
15

(6) LAMP, MAIN PC BOARD ASSY AND MOTOR UNIT

No.	CODE	NAME	REMARKS
1	XA5248051	Assy WB lamp	
2	X50228051	WB lamp	
3	085301415	Screw P3 × 14	
4	X81137051	MAIN PC BOARD ASSY 120 (USA/CAN)	CHG
	X81145051	MAIN PC BOARD ASSY 230 (EUROPE)	CHG
	X81163051	MAIN PC BOARD ASSY P-1000 (AUS)	CHG
	X81201051	MAIN PC BOARD ASSY (OTHERS)	CHG
5	052300606	Screw 3 × 6	
6	X81138051	Power supply unit ASSY for 120V	CHG
	X81139051	Power supply unit ASSY for 230V	ADD
7	XA4871051	G fuse 3.15AA for 120V	
	XA1463051	G fuse 2AT for 230V	ADD
	XA4872051	G fuse 3.15AB for 230V	ADD
8	XA5373051	Power unit cover B	
9	XA5374051	Power unit cover C	
10	052403006	Screw 4 × 30	
11	XA5278051	Screw P4 × 14	
12	XC0386051	NP board assembly #2	
13	0A5301006	Screw 3 × 10DB	
14	XA5284151	Set plate C	
15	060300516	Screw 3 × 5	
16	XA5289151	Connector holder assembly	
17	X56302001	Connector 176496	
18	048025346	Stop ring E2.5	
19	XA5267051	Assy, lead wire for XY PM	
20	136681051	Screw B3 × 8	
21	X53169050	Band #2	
22	XC2001051	MOTOR ASSEMBLY : 120V	CHG
	XC2004051	MOTOR ASSEMBLY : 230V	CHG
23	XA5295051	MM pulley 2GT14	
24	130676151	Set screw collar	
25	014400632	Screw 4 × 6	
26	XA5296151	Motor holder	
27	0A4301005	Screw 3 × 10 DA	
28	138172051	Screw 4 × 10 DA	
29	XA5297151	Timing belt 258-2GT for 120V	
	XA7677051	Timing belt for 230V	ADD
30	XA5298051	Pulley holder assembly	
31	XA5301051	Idol pulley	
32	048050346	Stop ring E5	

No.	CODE	NAME	REMARKS
33	060400816	Screw 4 × 10	
34	XA8318051	Lead clip for 120V	
35	X57908051	Screw S4 × 10 for 120V	
36	X81140001	Pin jack assy	
37	XC6651151	FOOT CONTROLLER : FC-313-81-LF	ADD

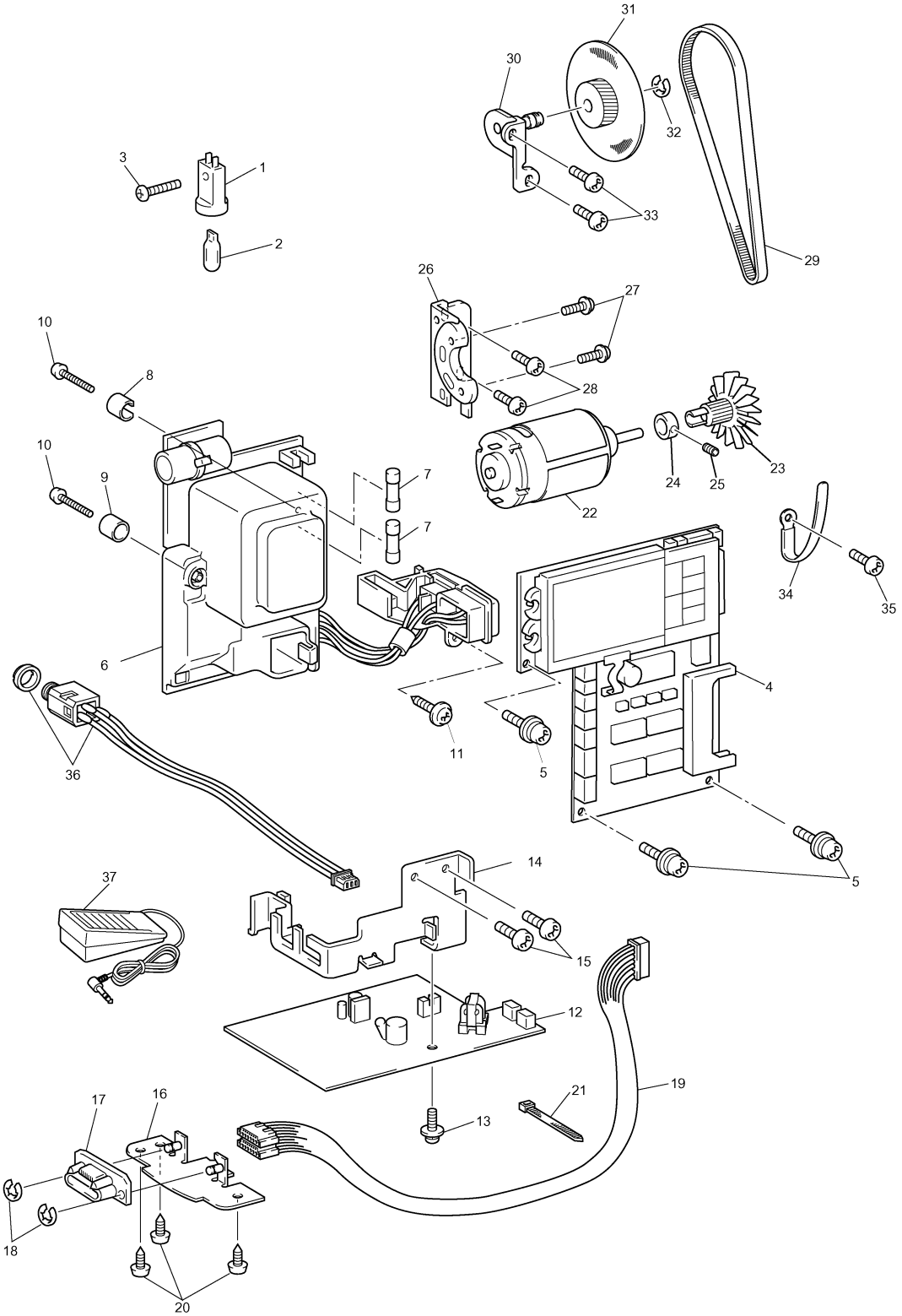
31
30
32
3
1
33
2
29
26
27
10
8
28
10
9
7
7
24
25
23
22
34
35
6
4
11
5
36
5
14
37
15
12
19
17
16
21
13
18
20

(7) EMBROIDERY UNIT

No.	CODE	NAME	REMARKS
1	XA5302001	Main frame assembly	
2	XA5306000	X gear	
3	048030346	Stop ring E3	
4	XA5307000	X driving gear	
5	X53330050	Washer	
6	X58715051	Timing belt 40S2M400	
7	048060346	Stop ring E6	
8	XA5308051	X tension pulley assembly	
9	XA6907051	Screw 4 × 8	
10	XA5312051	X carriage supporter assembly	
11	XA5314050	Cord guide	
12	XA5315051	Y pulse motor	
13	052300606	Screw 3 × 6	
14	XA5316051	X guide shaft	
15	0A4400806	Screw 4 × 8	
16	XA5317150	X slider	
17	XA5318100	X belt presser	
18	XA5319100	X shutter	
19	0A4300506	Screw 3 × 5 DA	
20	XC0417051	Assy, X initial sensor	
21	000020415	Screw M2 × 4	
22	XA5323051	X pulse motor	
23	XA5324181	X carriage assembly	CHG
24	XA5328000	Y gear	
25	048020346	Stop ring E2	
26	XA5329000	Y driving gear pulley	
27	048060346	Stop ring E6	
28	XA5330051	Timing belt 40S2M316	
29	XA6151051	Y tension pulley assembly	
30	XA5338001	Y carriage	
31	XA5339101	Notched spring	
32	XA5340151	Y guide shaft	
33	103810052	Spring	
34	048040346	Stop ring E4	
35	XA5341000	Y shutter	
36	XA5342100	Y slider	
37	XA8390051	Screw 3 × 7	
38	XC0419051	Assy, Y initial sensor	
39	XA5346050	Cord holder	
40	060300416	Screw 3 × 4	
41	087411416	Screw B4 × 14	
42	XC2133051	Carriage cover	
43	XA5285053	ES cover U	
44	XA6024051	ES cover D assy	

No.	CODE	NAME	REMARKS
45	XA5348051	ES cover D spacer	
46	136681051	Screw B3 × 8	
47	XA5349050	Rock finger	
48	XA0814051	Pin G 4 × 20	
49	XA2157051	Spring	
50	XA5350051	Rock finger button	
51	X56302001	Connector 176496	
52	085411415	Screw B4 × 14	
53	X59853050	Rubber cushion	
54	XA5352000	Cord presser	
55	XA6560051	ES UNIT COVER ASSY (USA/CAN)	CHG
	XA6560052	ES UNIT COVER ASSY (OTHERS)	ADD
	XA6560053	ES UNIT COVER ASSY (P1000)	ADD
56	XA6564001	ES COVER SHEET	CHG
	XA5685001	ES COVER SHEET (P1000)	ADD
57	XA6281000	Y presser plate	
58	XA6152051	Roller assembly	
59	XA6334000	Shutter presser plate	

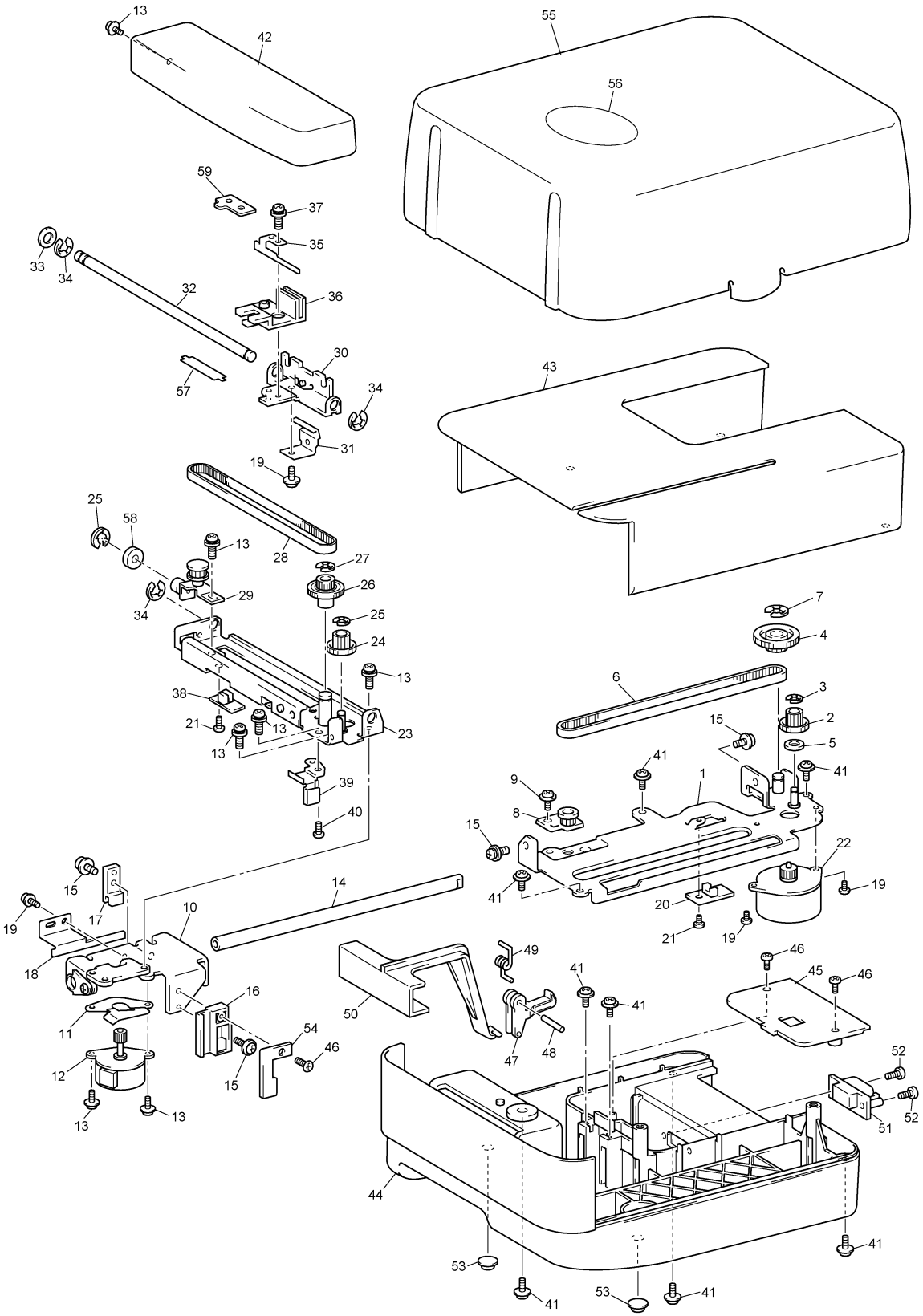
13
42
55
56
59
37
35
33
34
32
36
30
57
34
31
19
43
25
58
13
28
27
26
29
34
25
24
13
38
21
13
13
23
39
40
7
4
6
3
2
15
5
41
41
9
1
8
15
22
41
19
20
21
19
15
17
14
19
10
18
16
11
54
46
12
15
13
13
49
41
41
50
47
48
46
45
46
52
51
52
44
53
41
53
41
41

(8) OTHER PARTS

No.	CODE	NAME	REMARKS
1	X57789151	BH PRESSER FOOT	CHG
2	XC3098051	OVERCASTING STITCH FOOT ASSY	CHG
3	X56409051	BLIND STITCH FOOT ASSY	CHG
4	103561002	ZIPPER FOOT	ADD
5	X54243001	Seam ripper	
6	XA6627051	Needle set	
7	130012053	Spool cap A	
8	XC4487051	ACCESSORY BAG	CHG
9	X59476051	Cleaning brush	
10	XA2005051	Needle plate fixing metal	
11	XA5357001	Embroidery foot assembly	
12	184783051	SCISSORS	CHG
13	XA5752001	Spool cap (small)	
14	XA5353101	ENBROIDERY FRAME S2M	
15	XA5590151	EMBROIDERY SHEET S2M ASSY	
16	XA3336051	Spool pin	
17	X57045051	Felt	
18	X59375151	Button fitting foot	
19	XA5523050	Net	
20	XA1391001	Backing material	
21	X61252053	CARTON (USA/CAN)	CHG
	X61252054	CARTON (OTHERS)	CHG
	X61252055	CARTON (P1000)	ADD
	X61252054	CARTON (IRAQ)	ADD
22	X61248051	POLYSTYRENE FORM PAD ASSY, 145	CHG
	X61248052	POLYSTYRENE FORM PAD ASSY, 145 (KOREA)	ADD
23	X61188150	PE sheet	
24	XA6565051	Caution sheet	
25	XA1291051	POWER SUPPLY CORD : (KOREA)	CHG
	XA0070151	POWER SUPPLY CORD	CHG
	X59328151	POWER CORD	CHG
	X59354151	POWER SUPPLY CORD -BS	040124
26	194147011	Instruction manual (English)	
	194147015	Instruction manual (French)	
	194147013	Instruction manual (German)	ADD
	194147060	Instruction manual (Disney)	
	X61212051	HEAD COVER	ADD
	XZ0107051	ES PAD D	ADD
	130800051	BAG 220X310	ADD
	X60679051	BAG 450X400H	ADD
	XC0378051	WARRANTY CARD (U.S.A.)	ADD

No.	CODE	NAME	REMARKS
	UH3851001	WARRANTY CARD EUR	ADD
	XC6402051	WARRANTY CARD (U.K.)	ADD
	XA6351151	WARRANTY CARD (ITA)	ADD
	181401172	INSERTION WARRANTY COUPON	ADD
	XA1392051	BACKING MATERIAL SHEET	ADD
	XC7460051	ACCESSORY LEAFLET (P1000)	ADD
	XC7528001	G.LEAFLET 12	
	X81264051	G.LEAFLET NO.24	
	X81074001	G.LEAFLET DISNEY	

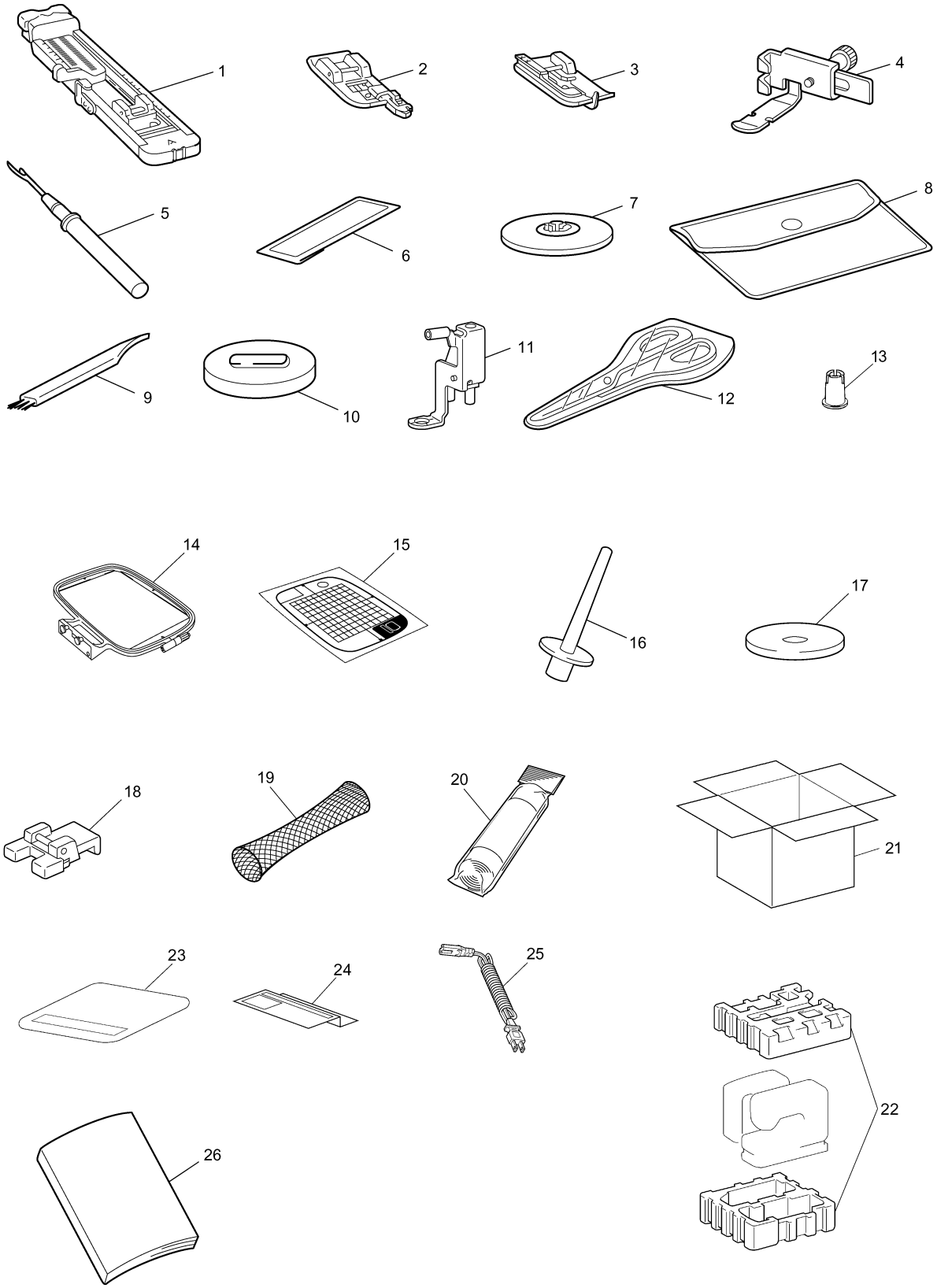
1
2
3
4
5
6
7
8
9
10
11
12
13
14
15
16
17
18
19
20
21
22
23
24
25
26

PE300S, P1000
12F02HF882145
Printed in Japan