SERVICE MANUAL FOR COMPUTERIZED SEWING MACHINE

SUPER ACE+e

2.2001.

GENERAL INFORMATION

This service manual has been compiled for explaining repair procedures of SUPER ACE+e.
This was produced based on up-to-date product specifications at the time of issue, but there may have been changes of specifications for the purpose of improvements.
Contact manufacturer or local sales company for information concerning such changes.

Brother Industries, Ltd.
Nagoya, Japan

CONTENTS

I . PRINCIPAL MECHANISMS..... 1
II . DISASSEMBLING AND REASSEMBLING THE SEWING MACHINE 8
III . HOW TO ADJUST MECHANICAL ELEMENTS..... 23
IV . HOW TO ADJUST ELECTRONIC ELEMENTS 47

CAUTION

1. Always use rubber gloves when handling printed circuit boards and never touch the metal portion of a printed circuit board with bare hands.
2. Keep your body earthed in order to avoid generating static electricity.
3. Pack printed circuit boards in aluminum foil and avoid subjecting them to any form of impact during storage or transportation.
4. Do not touch or damage the metal portion of a printed circuit board with a screwdriver or any other tool while making repairs or the like.

I. PRINCIPAL MECHANISMS

1. MECHANICAL CHART 2
2. POWER TRANSMISSION CHART 3
3. ELECTRONIC PARTS ARRANGEMENT CHART..... 4
4. CONTROL SYSTEM BLOCK DIAGRAM 4
5. MAIN MOTOR CONTROL..... 5
6. PATTERN GENERATOR..... 5
7. AUTOMATIC THREAD TENSION..... 6
8. OTHER ELECTRONIC COMPONENT FUNCTIONS 7

1. MECHANICAL CHART

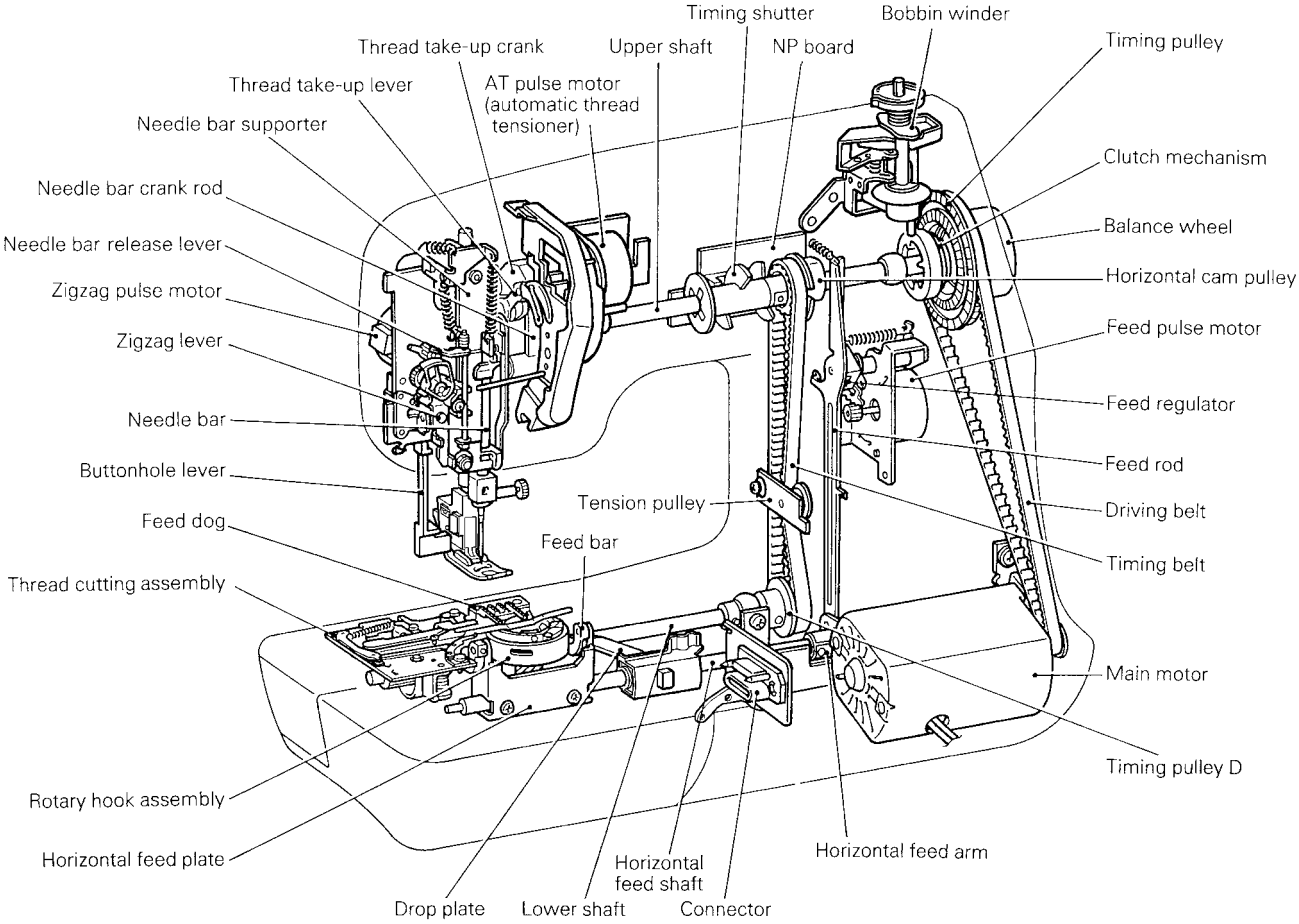

EMBROIDERY UNIT MECHANISM (OPTION)

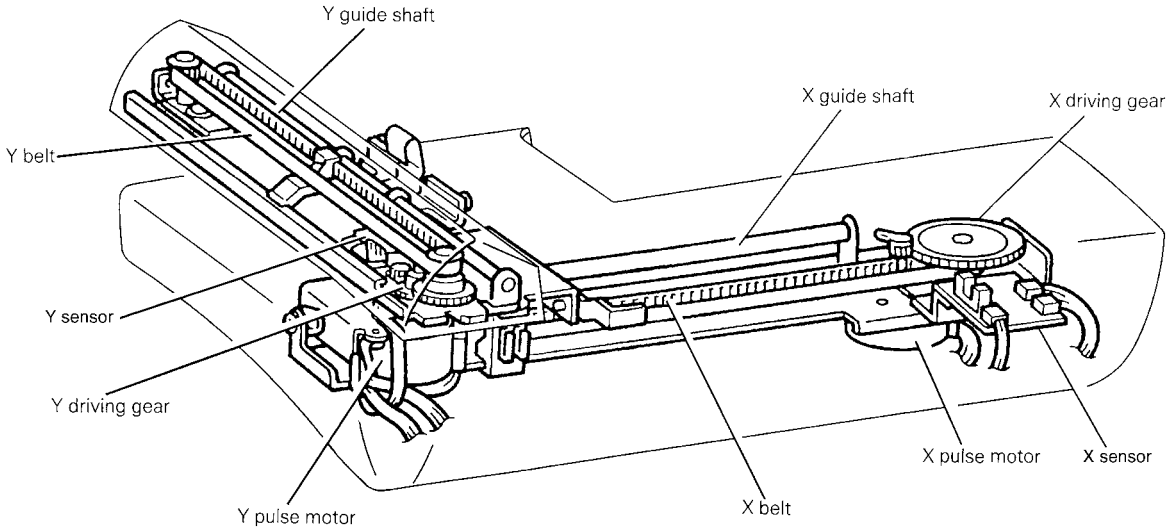

2. POWER TRANSMISSION CHART

(A) Generating mechanism of needle bar, thread take-up lever and zigzag movements

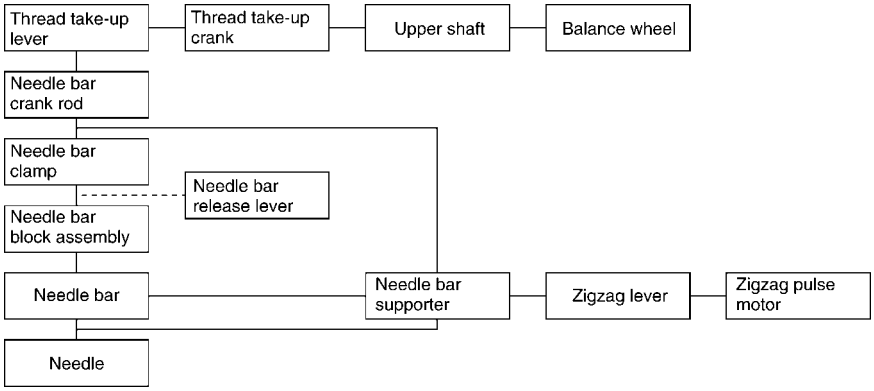

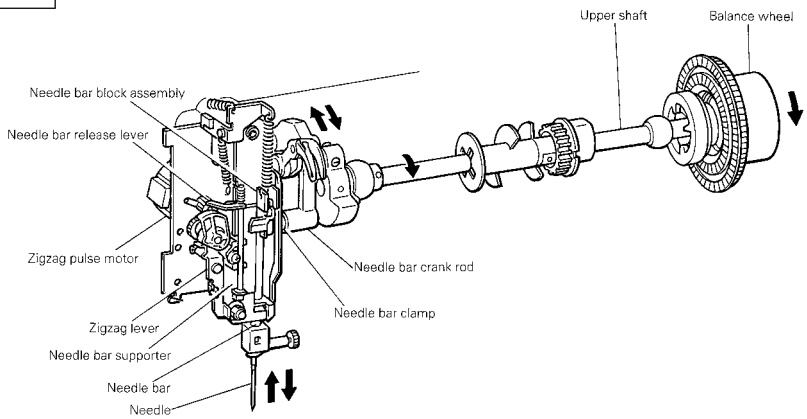

(B) Mechanism of feed dog and rotary hook movement

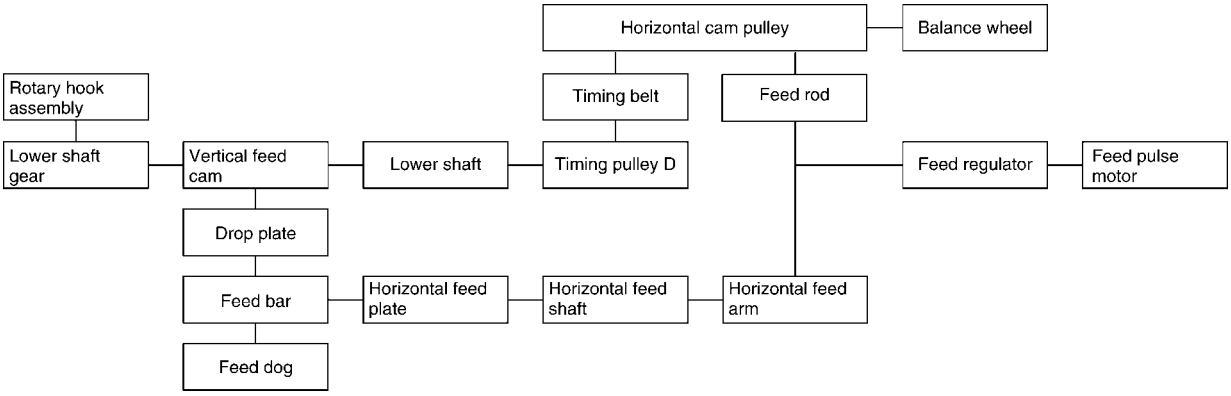

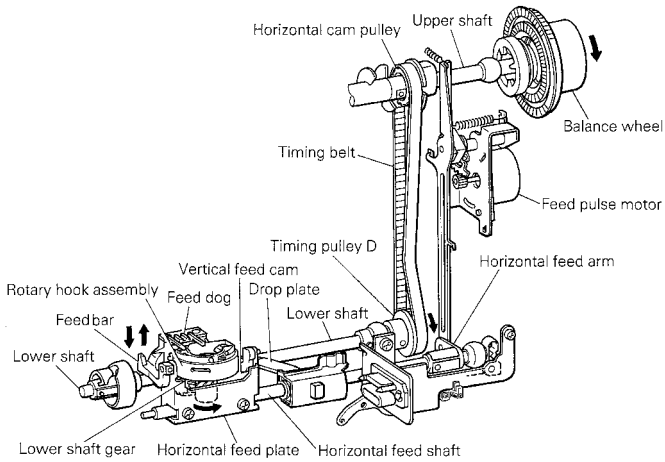

3. ELECTRONIC PARTS ARRANGEMENT CHART

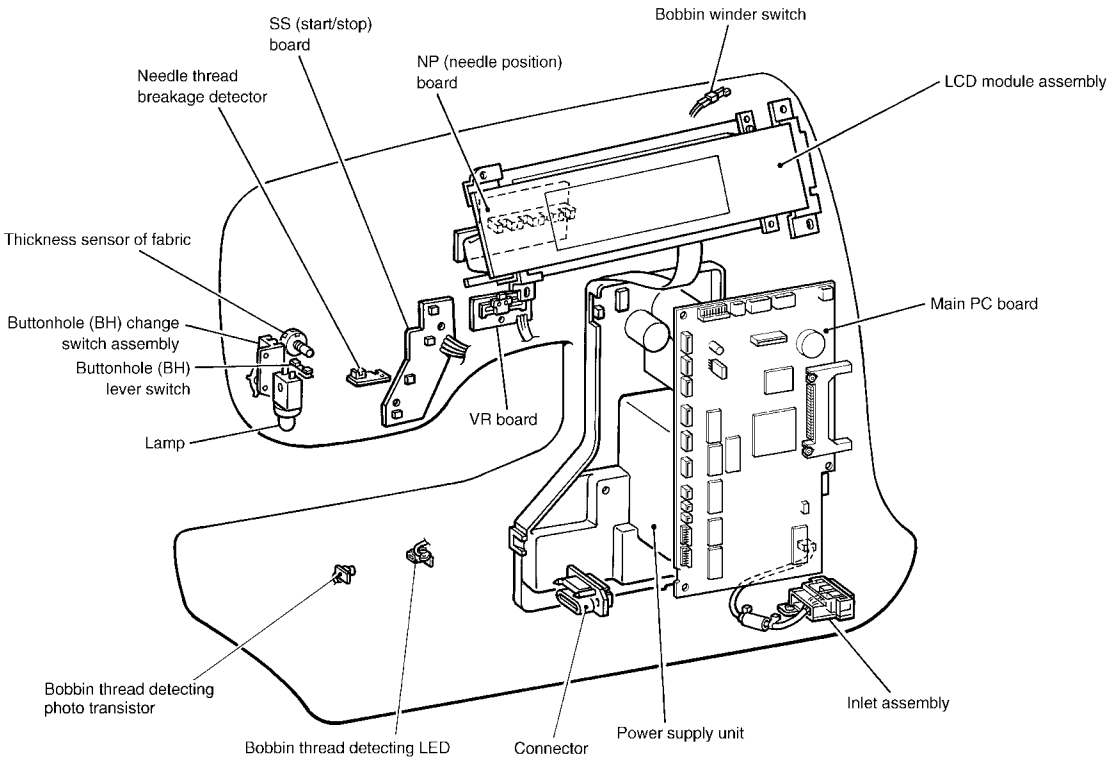

4. CONTROL SYSTEM BLOCK DIAGRAM

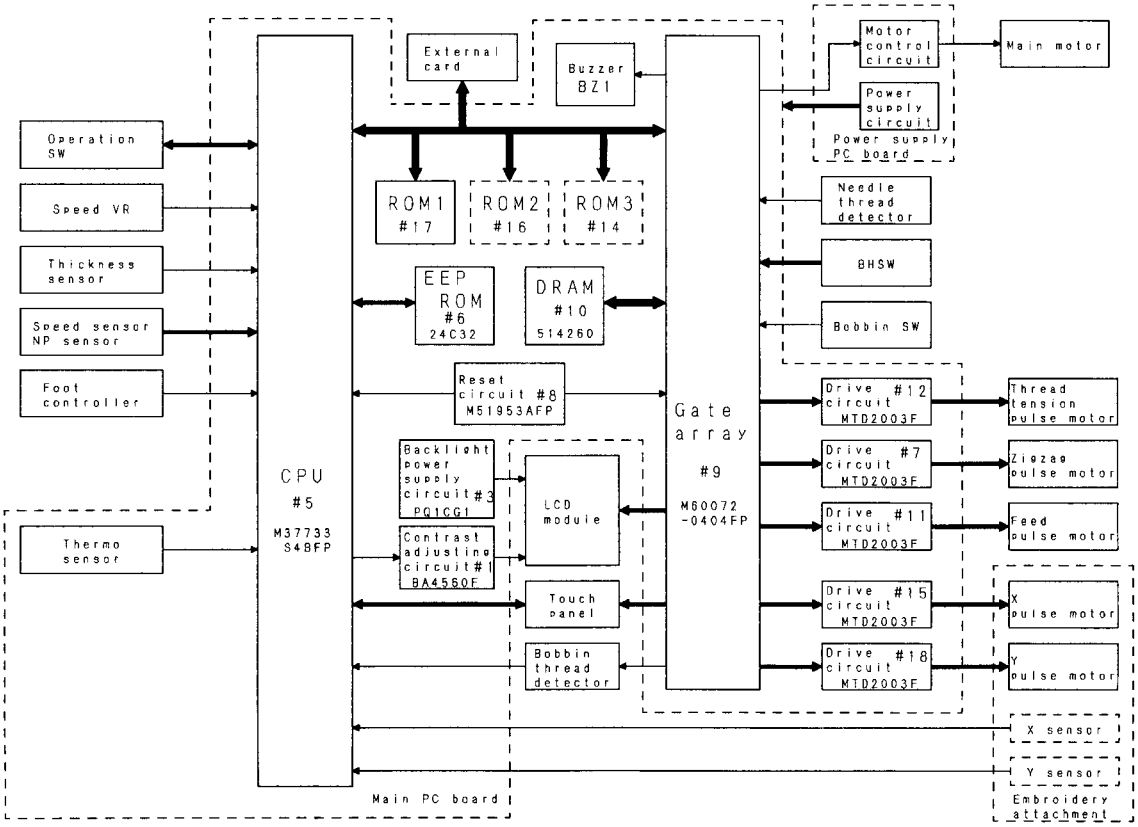

5. MAIN MOTOR CONTROL

The main motor for the sewing machine is required to smoothly change from low speed to high speed without any fluctuations due to load or temperature changes. To fully comply with this requirement, this model adopts PWM control using FET.

6. PATTERN GENERATOR

For conventional sewing machines, the pattern was generated by rocking the needle bar and the feed regulator by means of a pattern cam onto which the pattern data had been mechanically engraved. In contrast to this, this model stores the data electronically in memory and uses a feed pulse motor and a zigzag pulse motor to directly rock the needle bar and the feed regulator to generate the pattern. In addition, the pulse motors must move the position of the needle while the needle is raised and stop it in the correct position (and similarly, they must move the position of the feed regulator while the needle is lowered). Thus, highly-precise positioning and a fast response speed are required. Because of this, the feed pulse motor and a zigzag pulse motor were adopted, and a simple open-loop structure circuit was employed.

Block diagram of pattern generator control

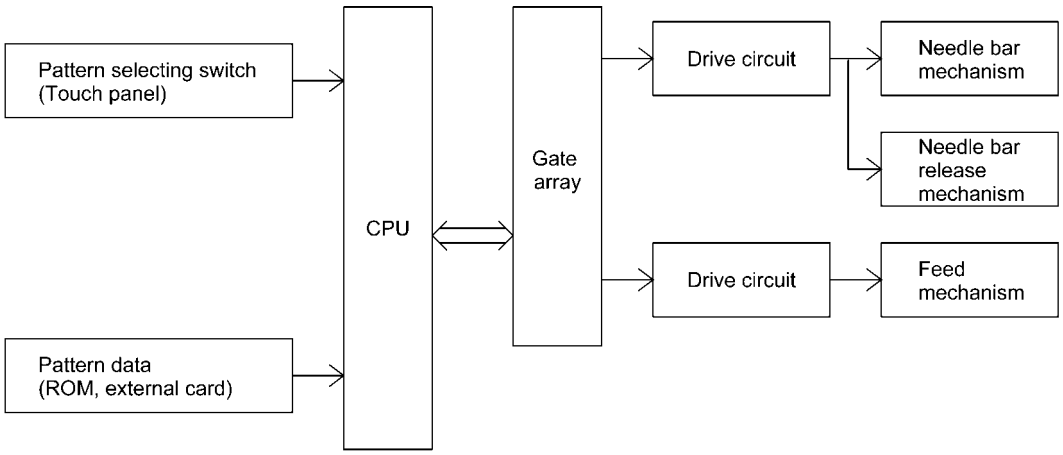

7. AUTOMATIC THREAD TENSION

On former models, the operator adjusted the thread tension of the needle and bobbin threads by changing the pressure between the tension disks.
On this model, however, the thread tension is calculated based on the horizontal and vertical movements of the embroidery frame, and the appropriate needle thread amount is fed by the thread tension pulse motor.
This always gives you correct the thread tension regardless of thread, kinds of fabric or sewing speed.

Automatic thread tension block diagram

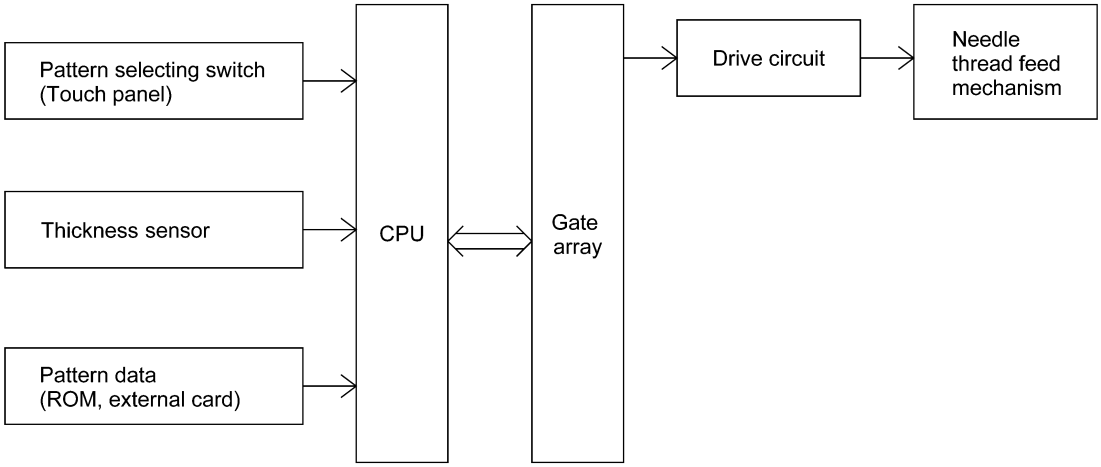

8. OTHER ELECTRONIC COMPONENT FUNCTIONS

Start/stop switch ..... used to start and stop (SS) the machine. If you want to start sewing at low speed, keep this switch depressed and start sewing.

Backstitch switch ..... used for backstitching and lockstitching. Backstitching is performed at low speed in the reverse direction while the switch is pressed. For lockstitching, three stitches are made at the current needle position and then sewing stops.

Needle position (UP/DOWN) switch.... used to change the needle position either up or down.

Automatic thread cutter switch ..... used to cut the thread automatically. When you press this switch, the machine will automatically cut the thread, regardless of the needle position, and stop with the needle at its upper position.

Touch panel..... used to select pattern and input number required for sewing by simply touching the display on the panel. This simplifies the operation for selecting the desired pattern and number.

Buttonhole stitch switch..... used to detect the edges of the buttonhole stitch by means of the buttonhole stitch presser foot and lever.

Buttonhole stitch lever switch ..... used to detect whether the buttonhole stitch lever is raised or lowered.

Rotation sensor ..... detects the drive timing of the embroidery frame drive, zigzag, feed and thread feed pules motor and detects the vertical position of the needle. Also detects the turning angle of the upper shaft by means of a photointerruptor and shutter installed on the upper shaft.

Speed sensor ..... used to detect the rotation speed of the main motor.
detects the operating speed of the main motor by means of a photointerruptor and shutter installed on the upper shaft.

Bobbin winder switch..... used to detect whether the bobbin winder has been set when winding the lower thread.

Junction for foot controller ..... when using the foot controller, connect it to this terminal.

Transformer..... used for driving the pulse motors, to illuminate the lamps and to supply power to the electronic circuitry.

Lamp..... is 12V 5W.

II. DISASSEMBLING AND REASSEMBLING THE SEWING MACHINE

1. DISASSEMBLING AND REASSEMBLING THE OUTER PARTS AND MAIN PARTS 9
2. LEAD WIRE ARRANGEMENT 22

1. DISASSEMBLING AND REASSEMBLING THE OUTER PARTS AND MAIN PARTS

1. Remove the screw securing the face plate, and the face plate by sliding it to the left.
2. Remove the screw securing the free arm cover, and the free arm cover by sliding it to the left.
3. Remove the blind cap on the belt cover, the screw securing the belt cover, and the belt cover from below by sliding it to the right.
4. Remove the two screws securing the base cover, slide the base cover to the left and then holding the front, slide it to the left and out.
5. Remove the screw securing the front cover (near spool pin), and loosen the two screws (below jaw section on face plate side, below free arm). Open the front cover toward the front, remove the four connectors and then the front cover.
6. Remove the two screws securing the needle plate, and the needle plate.
7. Remove the three screws securing the rear cover, and the rear cover from the rear side.

Disassembly Points

3. To remove the belt cover, unhook the bottom catch (A), slide the belt cover to the right, then unhook the top catches (B) by sliding the belt cover downward.
5. To remove the front cover, slide part (C) downward, unhook the two catches (F) from the base plate and the jaw section of the front cover (D) from the bottom of the thread guide, then pull the front cover away at the front.
7. To remove the balance wheel screw (E) securing the rear cover, move the bobbin winder shaft to the right.
   ∗ Before removing the rear cover, lower the presser foot lifter.

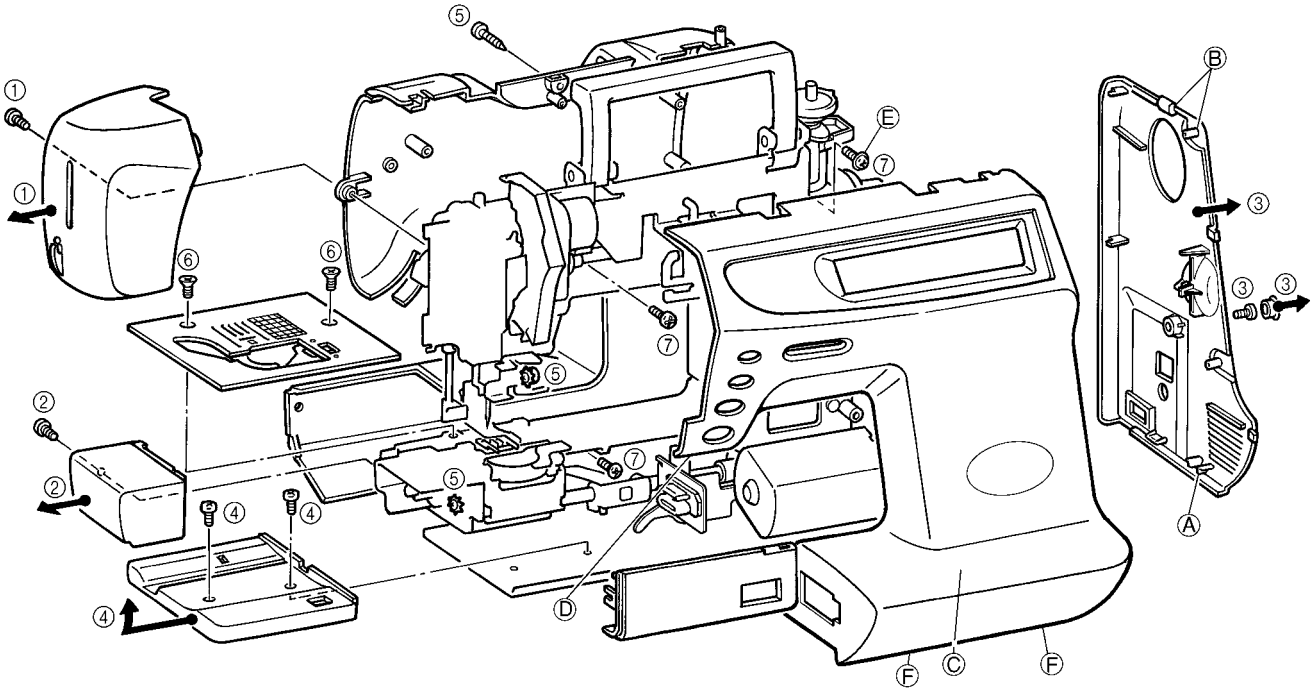

8. Remove the presser holder and needle.
9. Remove the 14 connectors, the two screws, and the main PC board.
10. Remove the two screws and handle holder assembly.
11. Remove the screw and thread winding assembly.
12. Remove the motor belt and pull out the motor connector. Remove the two screws and the main motor.
13. Remove the screw and the board set plate D.
14. Remove the side feed plate spring, the three screws and the SPM holder.
15. Remove the two screws, and pull out the thread guide cover from the tension link.
16. Remove the screw and the H block shaft holder assembly.
17. Remove the three springs and the needle bar block assembly.
18. Remove the two screws and the ZPM assembly.

Disassembly Points

9. To disconnect the connectors, grab the base of the connector and pull it straight out.
   ∗ In order to reduce the risk of static electric damage to the main PC board after it is removed from the sewing machine, do not touch the board's front surface and only carry it by its edges in the same way that you hold a compact disk.

15. To remove the thread guard cover from the tension link more easily, cut the band.

15. Before removing the thread guard cover from the tension link, lower the presser foot lifter and move part (A) of the thread take-up crank so that its front slants upward.

16. To remove the needle bar supporter stud holder, move it upward while removing it from the pin.

17. Before removing the needle bar supporter assembly, remove the two springs (B).

18. Before removing the ZPM holder assembly, remove the lamp cord connector from the power supply PC board.

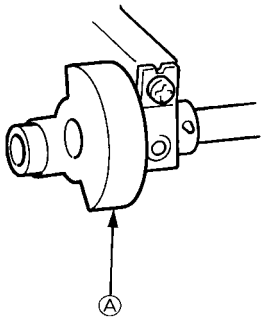
Ⓐ

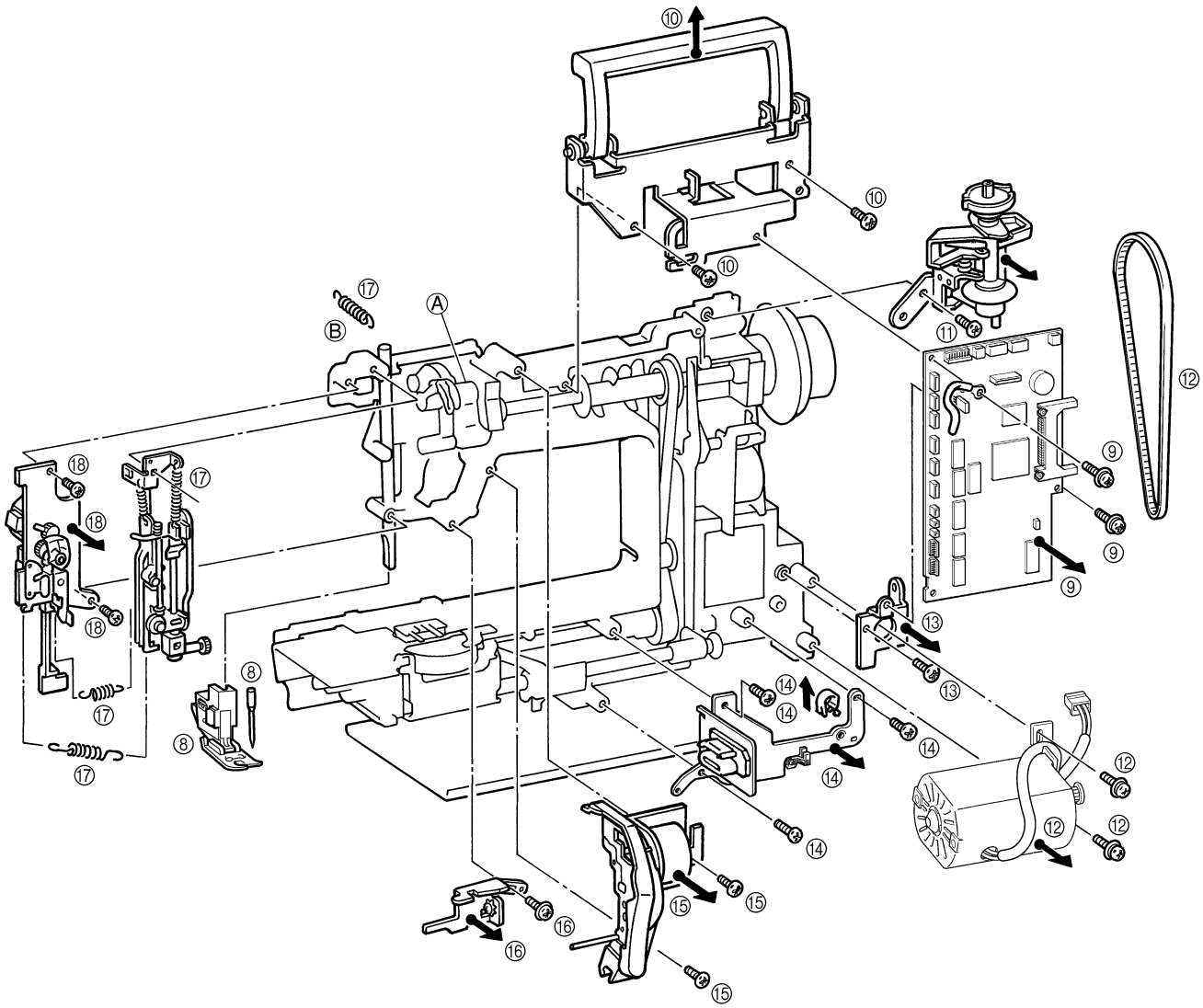
⑩
⑩
⑩
⑰
Ⓑ
Ⓐ
⑪
⑫
⑨
⑨
⑨
⑱
⑰
⑱
⑱
⑰
⑰
⑧
⑧
⑬
⑬
⑭
⑭
⑭
⑭
⑭
⑫
⑫
⑫
⑮
⑮
⑮
⑯
⑯

19. Remove the two screws and the thread cutter unit.
20. Remove the screw and the inner rotary hook bracket.
21. Remove the presser bar clamp screw.
22. Remove the presser bar by lifting it from above, and the presser bar clamp.
23. Remove the presser spring screw and the presser bar spring.
24. Remove the presser lifter by pulling the presser lifting shaft straight out from the front.
25. Pull the tension releaser plate out forward.
26. Remove the screw and the thread take-up shaft.

Disassembly Point

19. Before removing the thread cutting assembly, move the thread cutter cam so that its notch faces the front of the sewing machine (A).

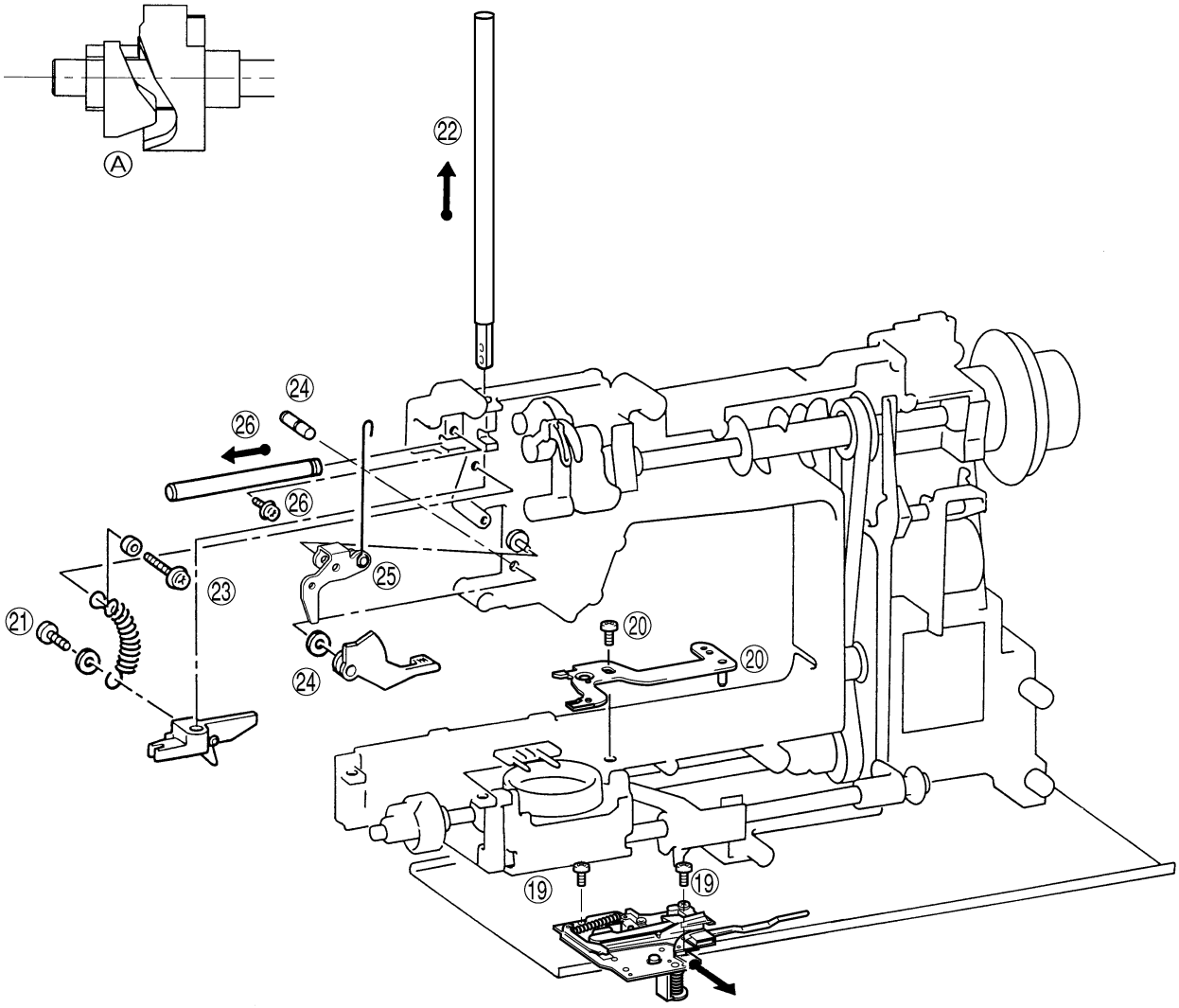

27. Remove the two screws securing the upper shaft metal, and the upper shaft assembly.
28. Remove the screw and the N.P. board assembly.
29. Remove the screw and the tension pulley holder.
30. Remove the two feed rod tension springs.
31. Remove the metal presser screw and horizontal feed shaft bracket screw, and then remove the horizontal feed assembly.
32. Remove the two screws and the drop guide.
33. Remove the two screws and the FPM holder assembly.
34. Remove the screw and the outer rotary hook assembly .
35. Remove the two metal presser screws and remove the lower shaft assembly and the timing belt.
36. Remove the connector, the two screws and the power supply unit assembly.
37. Remove the three screws and base plate assembly.

Disassembly Points

27. To remove the upper shaft assembly more easily, remove the two feed rod tension springs (A) and the tension pulley assembly (B) first.

    ∗ When removing the upper shaft assembly, do not to bend the NP or rotary shutters.

31. Before removing the horizontal feed assembly, remove the feed bar tension spring (C).

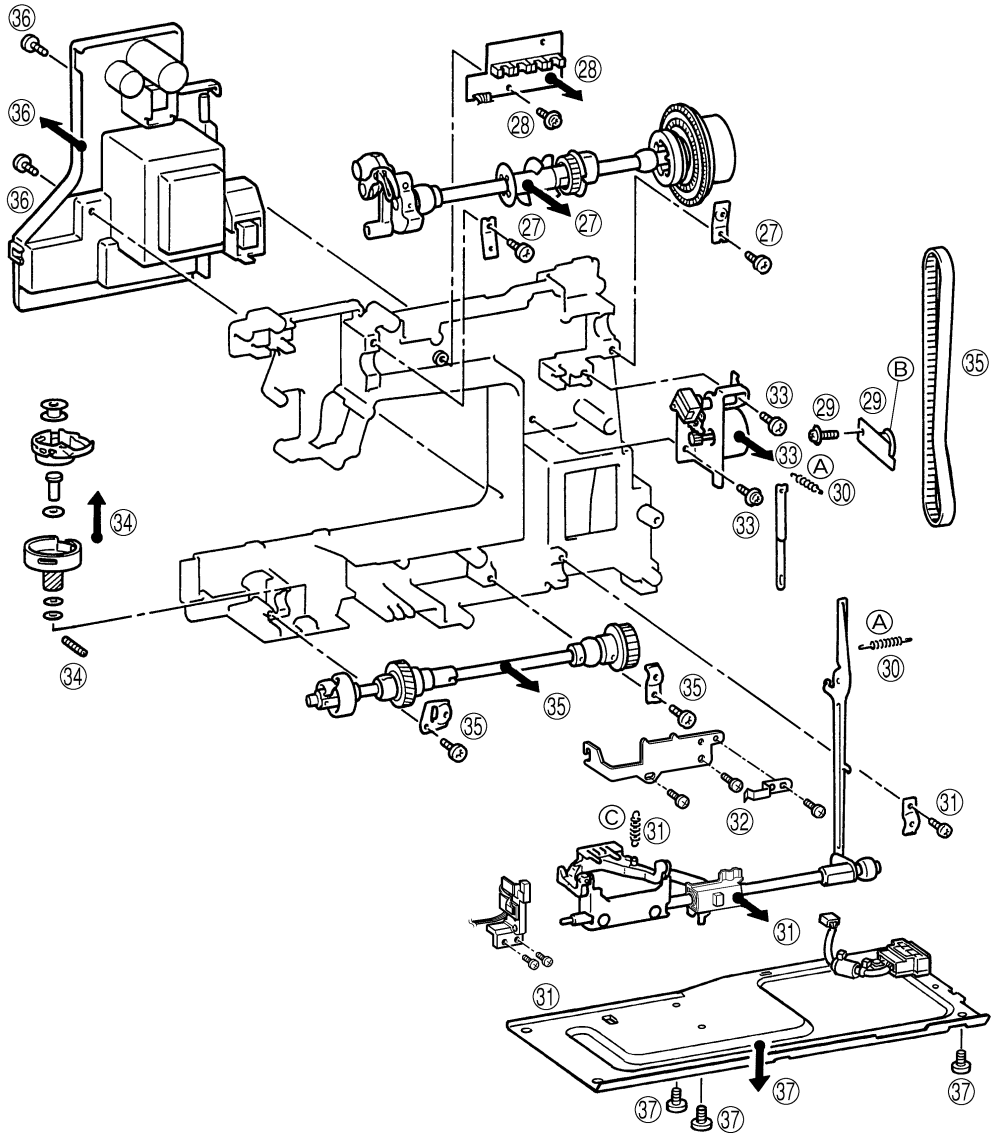

38. Attach the base plate using the three screws.
39. Attach the power supply unit assembly using the two screws and insert the inlet connector.
40. While attaching the timing belt, assembly the lower shaft assembly using the metal presser and screw.
41. Position the outer rotary hook assembly and the three spacers with the lower shaft assembly (refer to following illustrations) and attach using the screw.
42. Attach the FPM holder assembly using the two screws.
43. Attach the drop guide with the screw.
44. Use the screw to attach the horizontal feed shaft. Use the presser plate and the screw to attach the horizontal feed assembly. Attach the feed stand spring. Attach the drop plate spring with the screw.
45. Insert the feed rod shaft into the feed block and attach the two feed rod springs.
46. Attach the tension pulley holder with the screw.
47. Attach the NP board assembly with the screw.
48. Run the upper shaft through the timing belt and attach with the two presser plates and the screws.

Assembly Points

40. When attaching the lower shaft assembly, do so with notch of the lower shaft eccentric metal (A) facing forwards.
40. After lower shaft is attached, make sure that the lower shaft moves freely. If it does not move freely, lightly tap the lower shaft metal presser (I) with a punch, or similar tool, and check again.
40. When attaching the outer rotary hook assembly, attach so that lower shaft base hole (B) of the thread cutter cam and the outer rotary hook assembly baseline (C) are positioned towards the front.
41. ∗ Attach so that thick end of the rotary hook shaft washer is in on top.
41. ∗ Adjust position of notch of eccentric metal to adjust play of the outer rotary hook assembly and the lower shaft (rotation direction slack of the outer rotary hook assembly). Positioning the notch at the bottom will reduce play. Under normal conditions, the ideal position is towards the front. However, when play is excessive, adjust to prevent the rotary hook noise.
42. For the screw on the top of the FPM holder (D), use a 14 mm cap-attached screw.
42. Attach the washer (polywasher) to the right of feed regulator.
42. Push the FPM holder to the left so that there is no slack between feed regulator and fasten with cap-attached screw. When fastening next the screw, do so without applying force to holder. After fastening, check movement and slack of feed regulator.
44. For the screw on the left side of the horizontal feed shaft (H), use a screw of 14 mm.
44. Attach so that the feed dog adjustment knob comes to the right.
44. Check back and forth movement of feed stand.
    ∗ If free movement is hindered, feed pitch is inhibited or a forward and backward motion is inhibited.
45. Attach corner panel so that the "S" mark is on the inside (on feed rod side).
45. Attach the feed rod support plate spring (47-1) to support plate.
46. After tension pulley is attached, adjust tension of the timing belt. (see (G) for reference.)
48. When attaching the timing belt, first run corner panel through the timing belt and attach to the feed rod shaft, then attach the two feed rod springs (46).
    ∗ After attaching the timing belt, adjust rotation torque of the timing belt.
48. When attaching the timing belt, do so when notch (F) of the horizontal feed cam of the timing belt and the lower shaft baselines (B) and (E) are facing positioned on the front side.

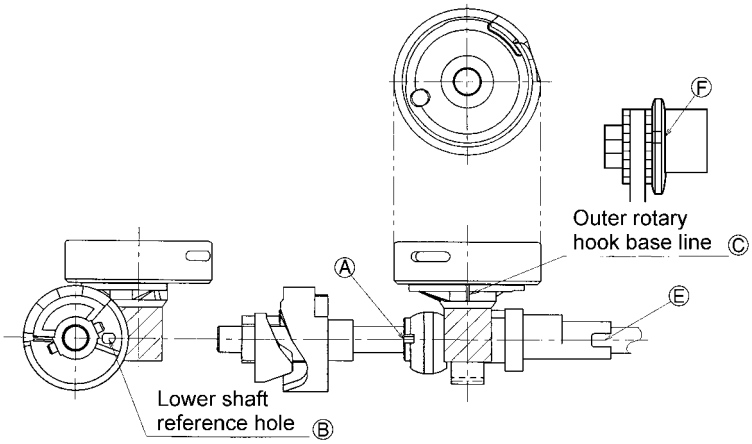
Outer rotary
hook base line
Lower shaft
reference hole

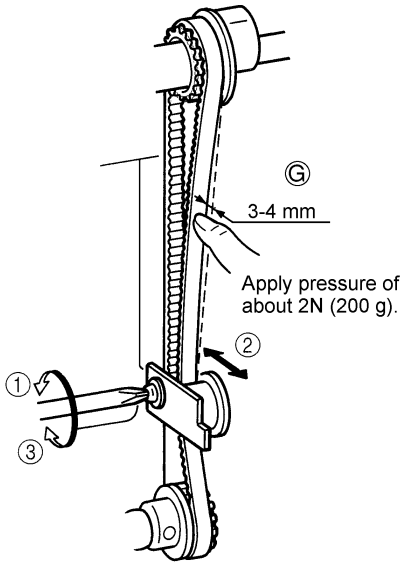
3-4 mm
Apply pressure of
about 2N (200 g).

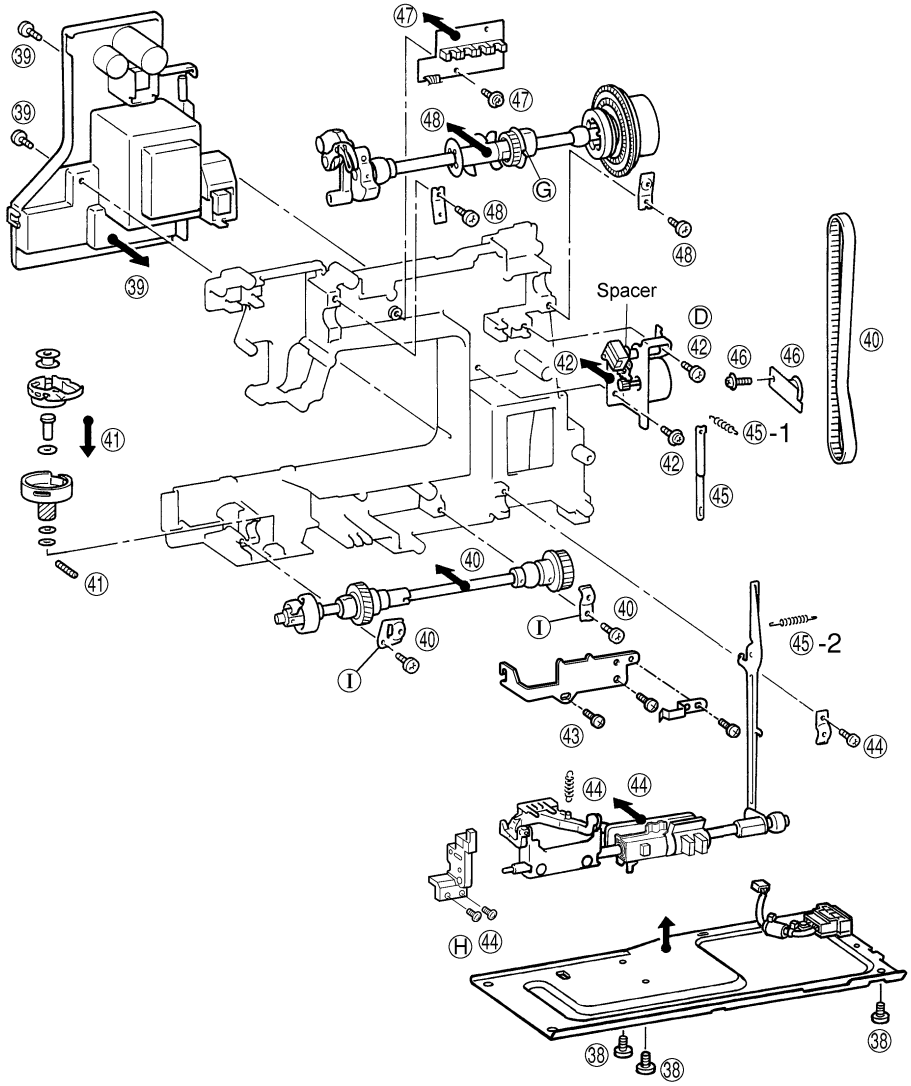
Spacer

49. Attach the thread take-up shaft using the screw.
50. Insert the tension plate.
51. Attach the presser spring, washer and clip using the collar and screw.
52. Attach the lifter and the presser foot lifter with the presser foot shaft.
53. Insert and attach the presser bar into the presser bar clamp.
54. Attach the presser bar spring onto the presser bar clamp.
55. Attach the inner rotary hook rotation prevention plate using the screw.
56. Attach the thread cutter unit using the two screws.

Assembly Points

49. The screw (49) used to install the thread take-up lever shaft should have a nominal length of 14 mm.
    - ∗ The thread take-up lever shaft should be installed so that there is no gap between the right side of the thread take-up and the stop ring. If there is a large gap, the right and left clearance may generate an irregular noise (thread take-up lever noise).

55. Install the inner rotary hook bracket assembly. (Firmly tighten the screw to make no space between (D) and the arm so that the inner rotary hook bracket assembly does not rotate.)
    - ∗ After the inner rotary hook bracket assembly is installed, adjust the position where rotation is prevented. (Refer to (A).)
    - ∗ If there is a small rotation prevention amount, the inner rotary hook may slip and start rotating causing damage to the inner rotary hook or breaking the needle.

56. Before installing the thread cutting assembly, move the thread cutter cam so that its notch faces the front (B) of the sewing machine.

56. Thread cutting assembly installation procedure

(1) Insert the projection (C) on the cutter unit into the arm guide hole.
(Insert the projection while checking that the inner rotary hook is correctly positioned.)

(2) Move the thread cutting assembly toward the right without bending the lower thread guide arm assembly to install it.
    - ∗ After installing the thread cutting assembly, perform the following procedure to check that the movable blade operates correctly.

(1) With the lever pin pressed in by hand, turn the balance wheel by hand to begin operating the movable blade.

(2) When the movable blade is at its rightmost position, release the lever pin and turn the balance wheel, then check that the movable blade lightly returns to its previous position.
    - ∗ If the movable blade does not operate correctly, loosen the screw (56), move the thread cutting assembly forward and backward, then move the unit toward the right and tighten the screw.

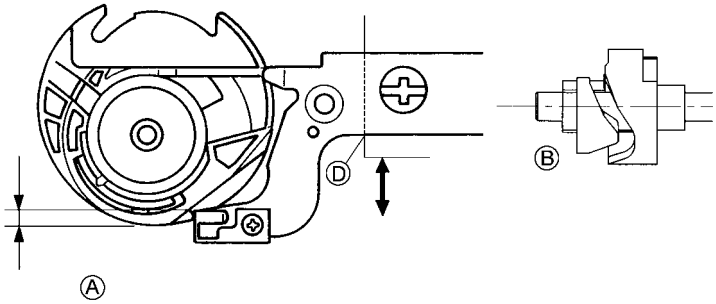
Ⓐ
Ⓑ
Ⓓ

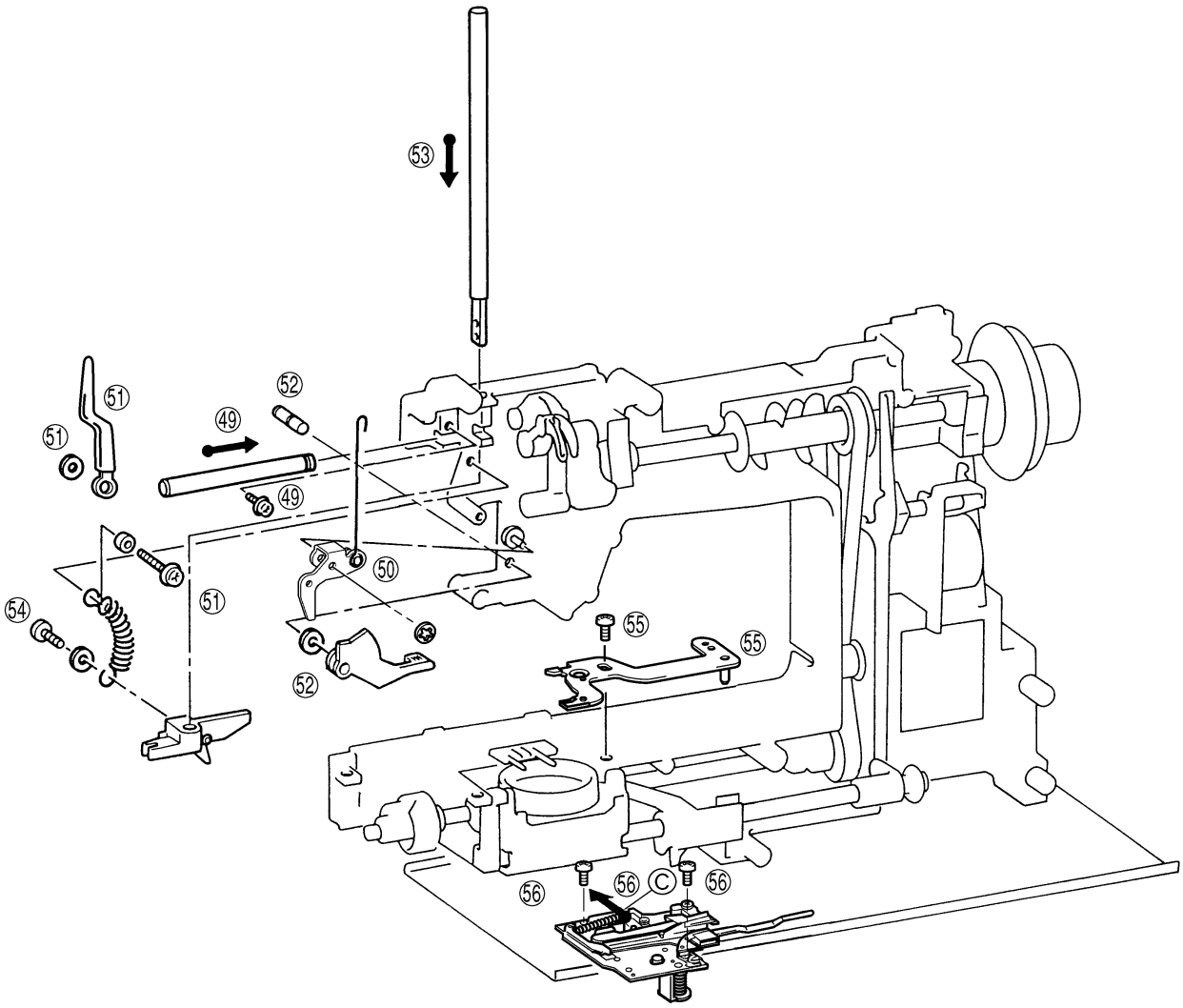
53
51
51
52
49
49
50
51
54
52
55
55
56
56
Ⓒ
56

57. Attach the ZPM holder assembly using the two screws.
58. Attach the needle bar supporter assembly using the two springs. (Insert into the needle bar clamp and needle bar crank rod)
59. Attach the needle bar supporter stud holder using the screw. (Insert the needle bar supporter arm into the pin on the needle bar supporter.)
60. While inserting the thread guide cover assembly into the thread release link attach using the two screws.
61. Attach the SPM holder assembly using the three screws, and couple the horizontal feed plate and vertical feed plate using the horizontal feed plate spring.
62. Attach the set plate D using the screws.
63. Connect the motor connector, attach the main motor using the two screws and catch the motor belt.
64. Attach the bobbin winder assembly using the screws.
65. Attach the handle holder assembly using the two screws.
66. Attach the main board assembly using the two screws. Connect the 14 connectors.
67. Attach the presser holder and needle.

Assembly Points

57. When installing the ZPM holder assembly, the cloth selecting sensor lever should be put on the presser bar clamp.
    ∗ If the cloth selecting sensor lever slips down, the cloth selecting sensor cannot operate and the thread tension cannot be adjusted.
58. Before installing the needle bar supporter assembly, insert it into the needle bar crank rod, insert the needle bar supporter stud holder, then install a spring. Hook the longer end of the other spring (F) to the main unit.
59. Install the needle bar supporter stud holder from the needle bar supporter pin side, then attaching it using a 14 mm screw.
60. Before installing the thread guard cover, lower the presser foot lifter and move part (A) of the thread take-up crank so that its front slants upward.
63. Apply a pressure of 2N (200 g) at the center of the motor belt, then adjust its tension until it only moves 4 to 6 mm (B).
    ∗ If the belt is too tight, the torque becomes too much, causing the motor to rotate slower and generate an irregular noise. If the tension is too loose, the belt may jump and the upper shaft may not rotate smoothly while sewing on denim and other thicker fabrics or overlapping fabrics.
64. When installing the bobbin winder assembly, align the tab (C) in the bobbin winder assembly holder with the positioning hole in the sewing machine.
66. When installing the main PC board, insert the bottom left section of the PC board into the notch (D) in the SPM holder assembly.
66. Insert the connectors correctly and pass the lead wires under the guides (E).
67. When installing the presser holder, install the presser foot lifter.

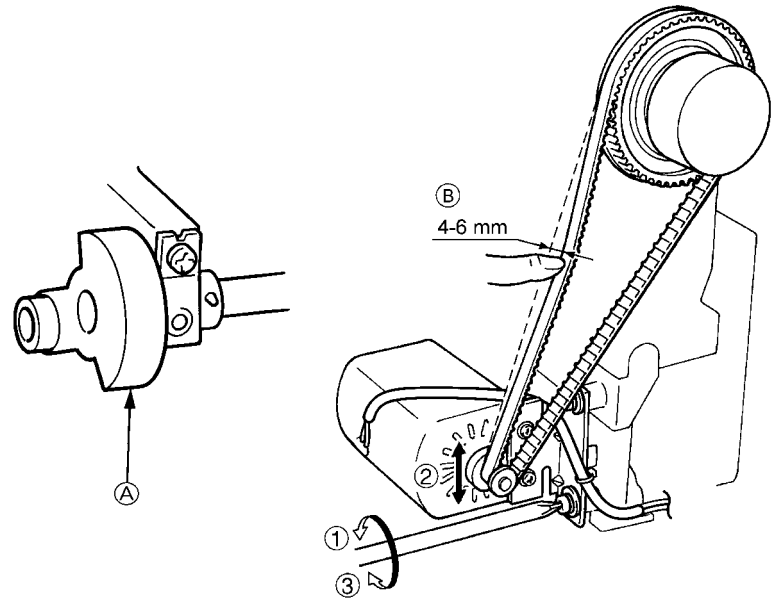
B
4-6 mm
A
2
1
3

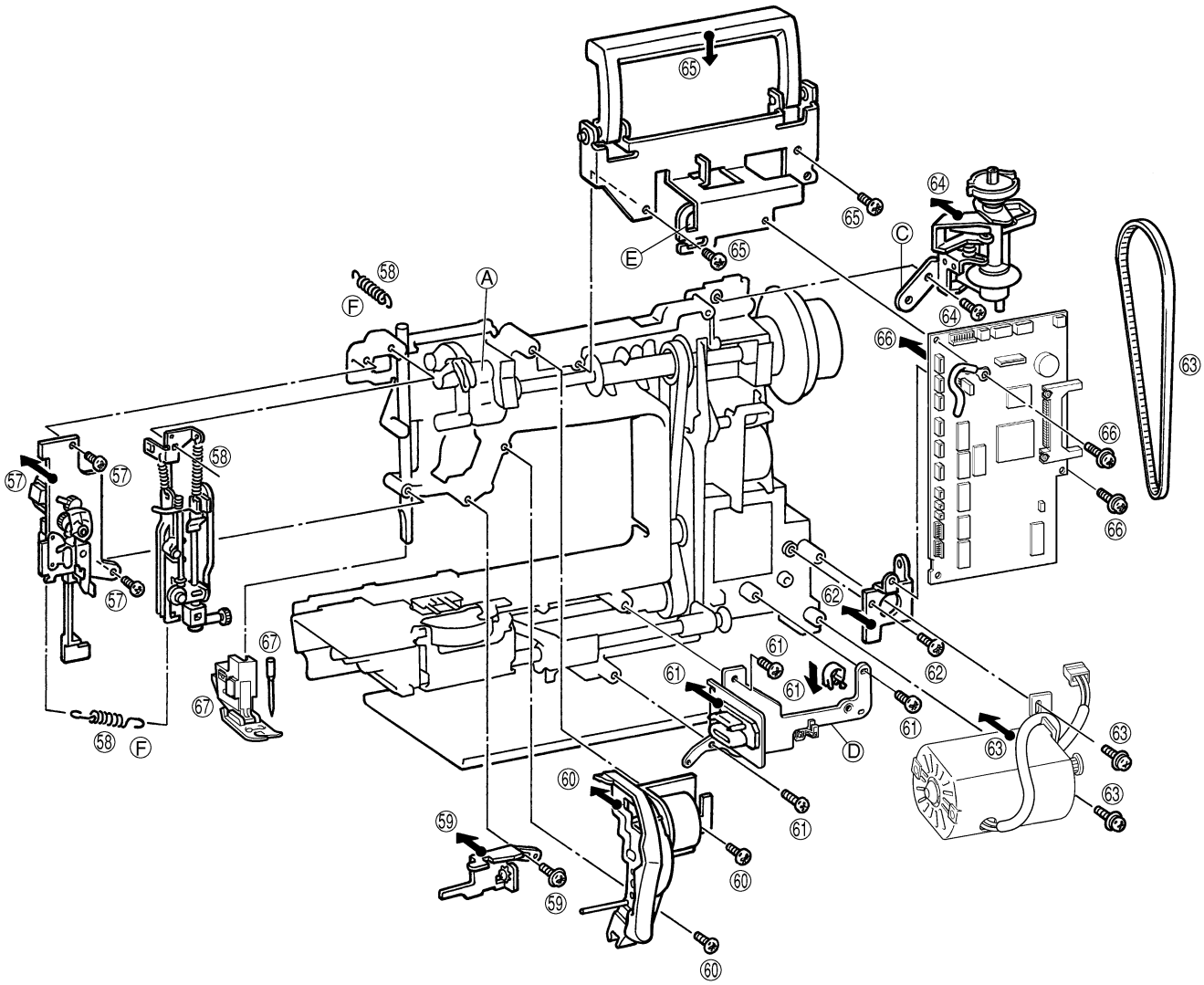
65
64
C
E
58
F
A
66
63
57
62
61
67
D
60
59

68. Attach the rear cover using the three screws.
69. Attach the needle plate assembly using the two screws.
70. Connect the four connectors, and attach the front cover using the three screws.
71. Insert the base cover into the base plate and attach using the two screws.
72. Attach the belt cover using the screw, and fit the blind cap on.
73. Attach the free arm cover using the screw.
74. Attach the face plate using the screw.

Assembly Points

68. When installing the rear cover, lower the presser foot lifter, slightly lift the back of the unit, then install the rear cover.
70. When installing the front cover, do not pinch the lead wires on the left side of the main PC board between the cover and the sewing machine.
71. Check that the right side (A) of the base cover is securely attached to the bottom of the rear and front covers.

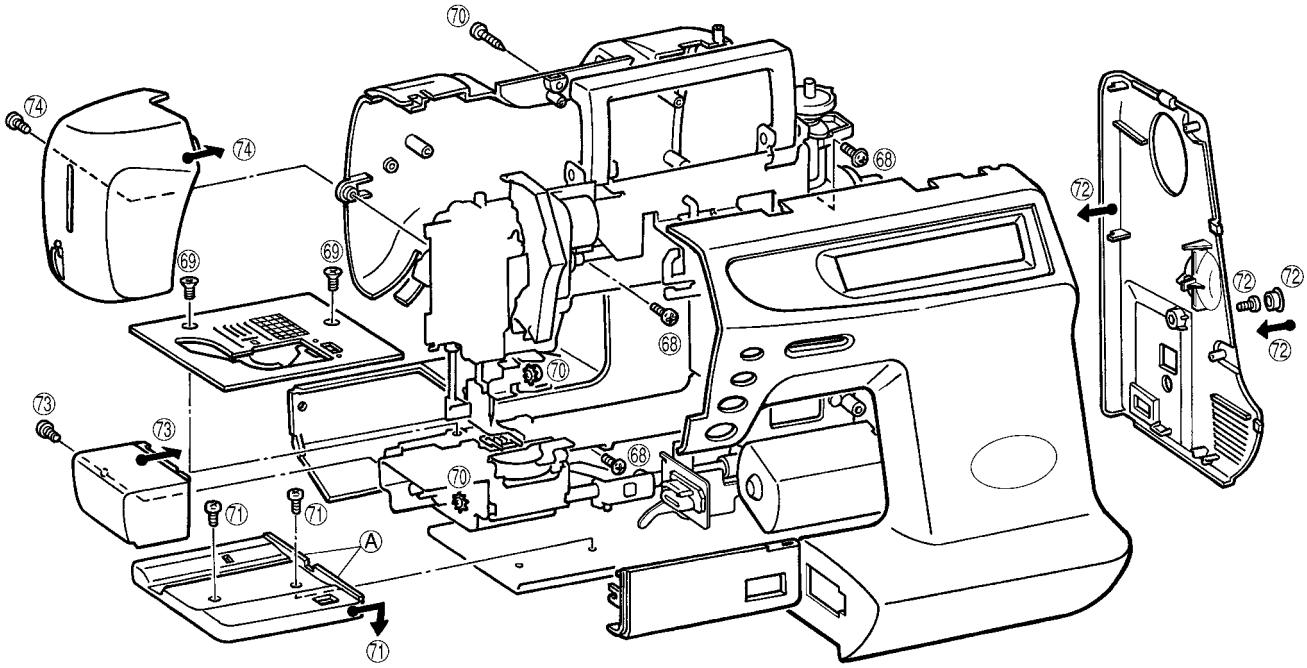

DISASSEMBLING AND REASSEMBLING THE EMBROIDERY UNIT (OPTION)

1. Remove the screw and Y carriage cover.
2. Remove the screw, and remove the side cover from the lower side.
3. Remove the two screws and pull the main cover to the right.
4. Remove the three screws and the base cover.

Assembly Point

3. Securely fit the bottom rear part of the side cover into the base cover.
   ∗ If these parts do not securely fit together, the side cover may become loose and raised up.
   Check to make sure that there is space between sensors on X and Y shutters.
   Set X sensor lead wire and X pulse motor lead wire in section (A). Attach main frame, taking care not to pinch cord.
   Using a clip, fix Y sensor lead wire firmly in place so that there is no slack between in and section (B).
   Move X carriage side to side to make certain that Y sensor lead wire and YPM lead wire do not come into contact with main frame and main cover during movement of X carriage.

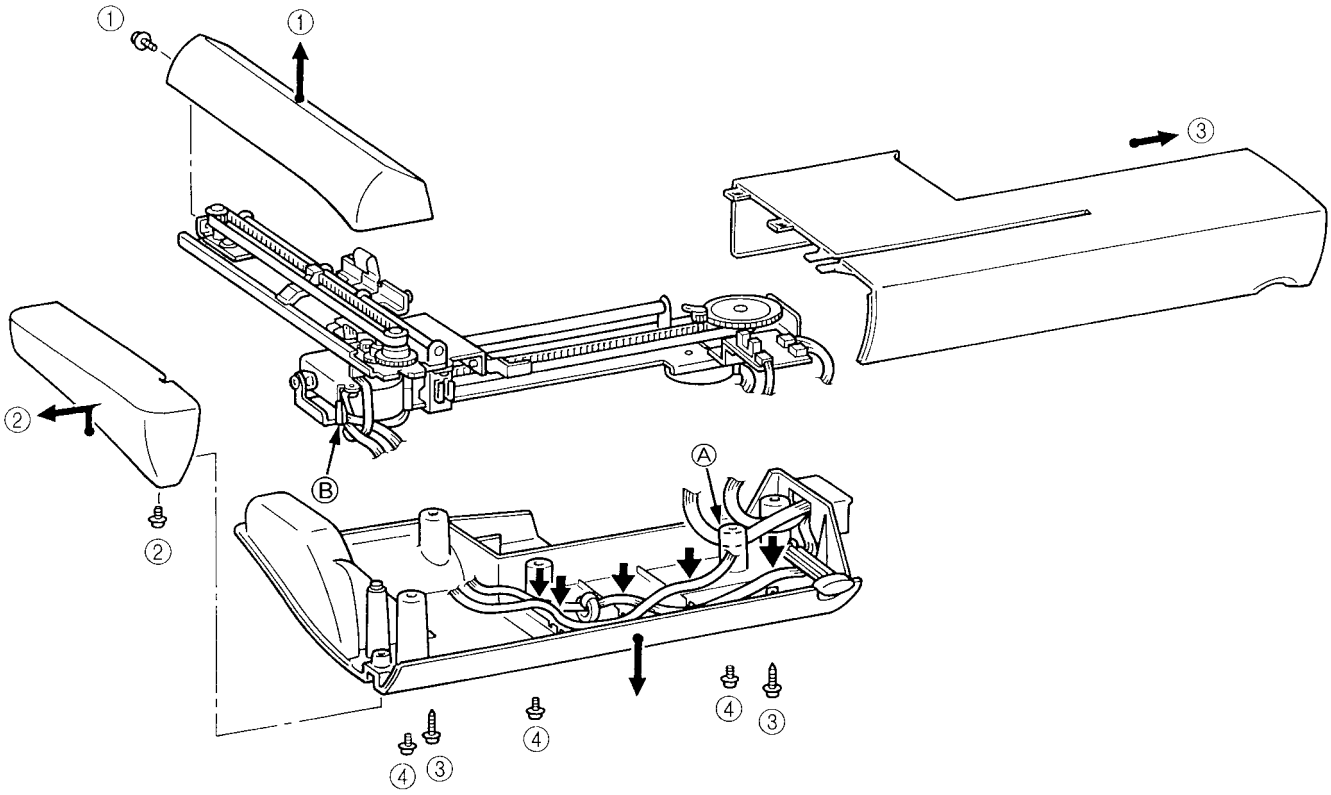

2. LEAD WIRE ARRANGEMENT

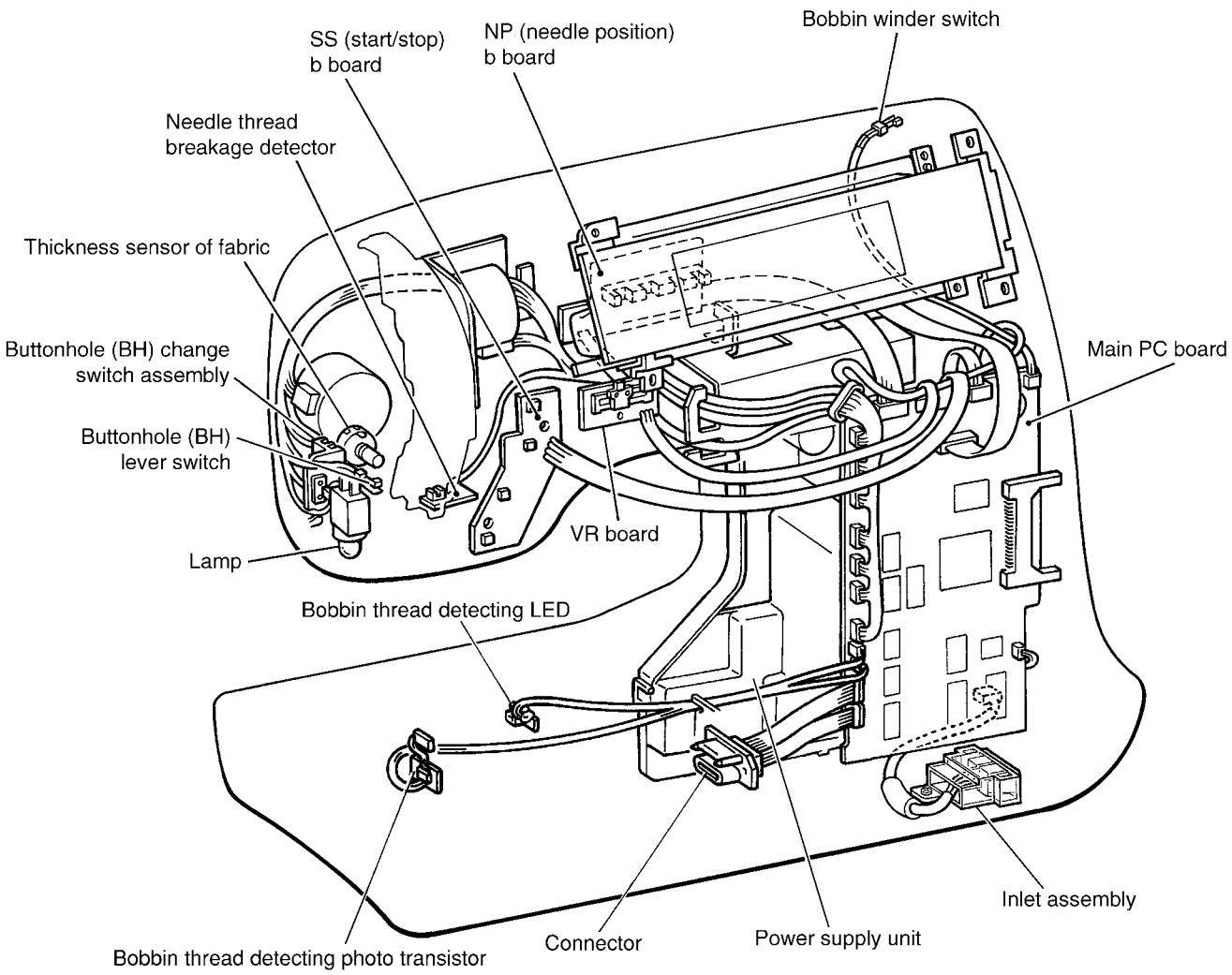

III. HOW TO ADJUST MECHANICAL ELEMENTS

1. SETTING THE TEST MODE 24
2. TENSION OF MOTOR BELT AND TIMING BELT 25
3. NEEDLE DOWN POSITION ADJUSTMENT 26
4. TIMING OF NEEDLE AND ROTARY HOOK (CLEARANCE BETWEEN THE NEEDLE AND THE ROTARY HOOK POINT) . 27
5. NEEDLE BAR HEIGHT 28
6. LOWER SHAFT 29
7. FRONT/BACK, LEFT/RIGHT POSITION OF FEED DOG 30
8. HEIGHT OF FEED DOG 31
9. PRESSER BAR HEIGHT 32
10. CHECKING DETECTION OF FABRIC THICKNESS (If a new main PC board is installed, this adjustment must be performed.) .. 33
11. EMBROIDERY UPPER THREAD ADJUSTMENT (OPTION) 34
12. POSITION OF BUTTONHOLE SWITCH LEVER 35
13. BOBBIN WINDER 36
14. BOBBIN THREAD DETECTOR 37
15. INNER ROTARY HOOK BRACKET POSITION 38
16. LARGE ONE-POINT PATTERN SHAPE (SOFT ADJUSTMENT) 39
17. FEED ADJUSTMENT (VERTICAL FEED) 40
18. INNER ROTARY HOOK TENSION 41
19. NEEDLE THREADER 42
20. NEEDLE THREADER (CHECKING THE HOOK POSITION IN HORIZONTAL DIRECTION) 43
21. NEEDLE THREADER (EXCHANGE) 43
22. NEEDLE THREADER (CHECKING THE HOOK IN STANDARD POSITION) 44
23. NEEDLE THREADER (CHECKING THE HOOK POSITION IN VERTICAL DIRECTION) 44
24. TIMING BELT TENSION FOR THE X DIRECTION 45
25. TIMING BELT TENSION FOR THE Y DIRECTION 46

1. SETTING THE TEST MODE

BASIC TEST MODES

To set the test mode, turn on the power switch while holding down the start/stop button and backtack button simultaneously. Numerals will appear on the touch panel. The respective test mode will be entered when the numeral is pressed.

Test Mode No.	Adjustment Item	Page
2	Checking detection of fabric thickness	33
3	Pattern	39
4	Needle down position	26
5	Timing of needle and rotary hook	27
6	Position of feed dog	30
21	Bobbin thread detector	37
22	Embroidery Upper thread (OPTION)	34

The other test modes are used for factory adjustments.

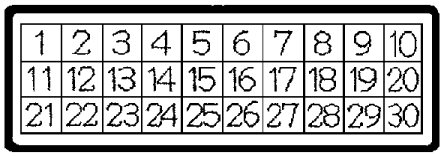

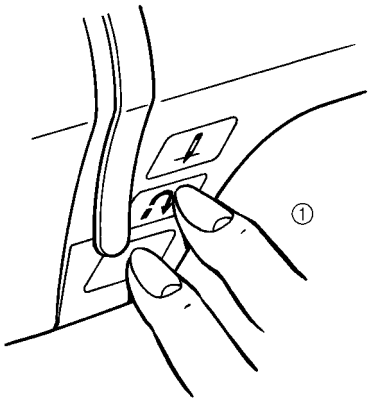

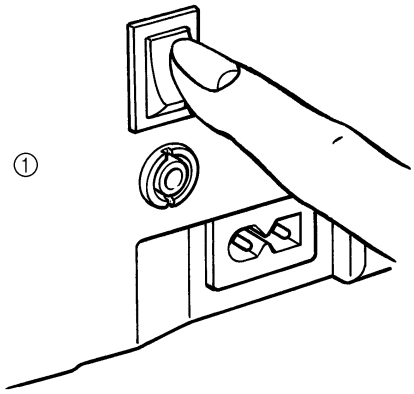

2. TENSION OF MOTOR BELT AND TIMING BELT

STANDARD

There should be a 4-6 mm slack in the motor belt when the center of the motor belt is pressed with a force of 2N (200g).
There should be a 3-4 mm slack in the timing belt when it is pressed with a force of 2N (200g).

ADJUSTMENT

Timing belt

1. Loosen the screw of the belt adjusting pulley.
2. Adjust the position of the belt adjusting pulley.
3. Tighten the screw of the belt adjusting pulley.

Motor belt

1. Loosen the two screws securing the motor holder.
2. Adjust the belt tension by moving the motor holder.
3. Tighten the two screws.

Adjustment Points

1. If the timing belt tension is too loose, the belt may jump while sewing on denim and other thicker fabrics or overlapping fabric, or the feed timing or the closeness of the needle and rotary hook may prevent sewing.
2. If the motor belt tension is too tight, the torque becomes too much, causing the motor to rotate slower and generate an irregular noise.
3. If the motor belt tension is too loose, the belt may jump and the upper shaft may not rotate smoothly while sewing on denim and other thicker fabrics or overlapping fabrics, the motor may not rotate smoothly, or the upper shaft may not rotate.

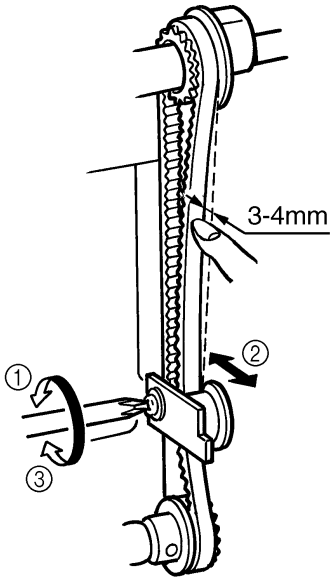

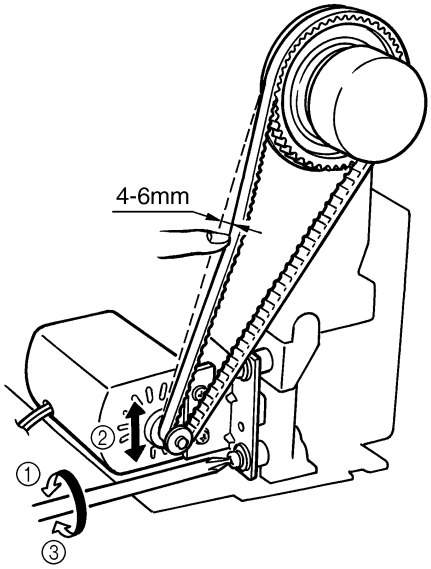

3. NEEDLE DOWN POSITION ADJUSTMENT

STANDARD

When test mode "4" is selected, the needle should be exactly at the middle of the needle plate hole in the needle down position.

ADJUSTMENT

1. Select test mode "4".
2. Turn the balance wheel to move the needle to the needle down position.
3. Loosen the screw securing the zigzag adjusting nut.
4. Turn the balance wheel to move the needle to the left and right, and then turn the zigzag adjusting nut by using the box wrench to set the needle in the center of the needle hole.
5. Tighten the screw securing the zigzag adjusting nut.
6. Turn the balance wheel and check the needle down position.

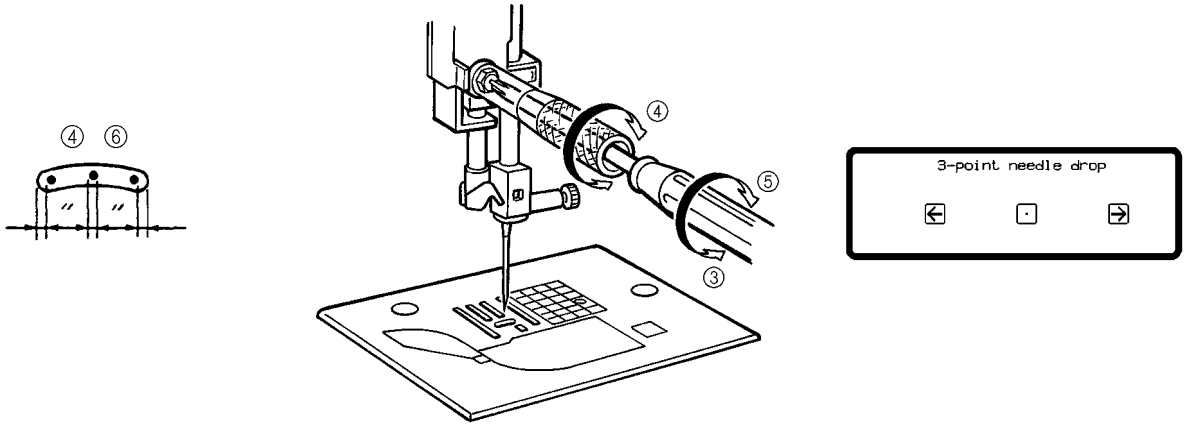

4. TIMING OF NEEDLE AND ROTARY HOOK (CLEARANCE BETWEEN THE NEEDLE AND THE ROTARY HOOK POINT)

STANDARD

When test mode "5" is selected and the needle is raised 2.9-3.3 mm from its lowest position, the rotary hook point should be positioned at the right side of the needle.
The clearance between the needle and the rotary hook point should be 0.1 mm or less, and they should never touch each other.

ADJUSTMENT

1. Select test mode "5".
2. Loosen the three screws of the lower shaft gear.
3. Adjust the clearance between the needle and the rotary hook. (When the needle is raised 2.9-3.3 mm from its lowest position, the rotary hook point should be positioned at the right side of the needle.)
4. Tighten the three screws of the lower shaft gear.
5. Turn the eccentric screw, and set the clearance between the needle and the rotary hook point to 0.1 mm or less. Make sure that the needle does not make contact with the rotary hook point.

Adjustment Points

1. When adjusting the timing, the needle should be at its lowest and leftmost position.
   ∗ If the clearance is too large, skipped stitches may occur. (Refer to (D).)
   If the clearance is too small, the needle may generate an irregular noise (scraping metal sound) or the needle may break.
2. If the needle rises too little, skipped stitches, split thread or cut thread may occur. (Refer to (B).)
3. If the needle rises too much, skipped stitches, split thread or cut thread may occur due to a loop forming in the thread. (Refer to (C).)

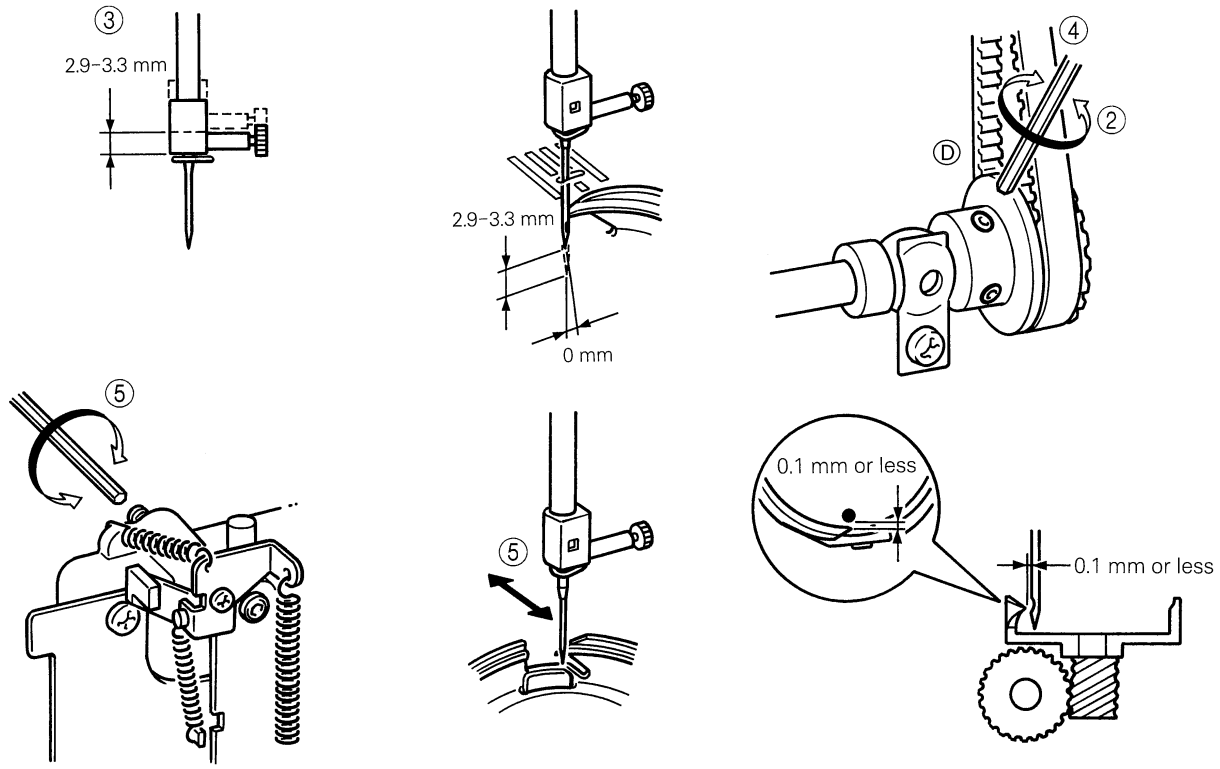

5. NEEDLE BAR HEIGHT

STANDARD

When test mode "5" is selected, turn the balance wheel so that the needle meets the rotary hook point. At this time, the clearance between the upper end of the needle eye and the bottom of the rotary hook point should be 1.0-1.4 mm.

ADJUSTMENT

1. Select test mode "5".
2. Turn the balance wheel so that the needle meets the rotary hook point.
3. Loosen the screw of the needle bar block assembly.
4. Move the needle bar vertically to adjust the clearance to between 1.0-1.4 mm.
5. Tighten the screw of the needle bar block assembly.

   NOTE : The needle bar clamp should be parallel to the side of the needle plate. If the needle bar is loose when you adjust the needle bar height, it may result in sewing troubles.

Adjustment Points

1. If the needle bar height is too low or too high, skipped stitches, split thread or cut thread may occur. (Refer to (A).)
2. While adjusting the needle bar height, check the needle threading hook.

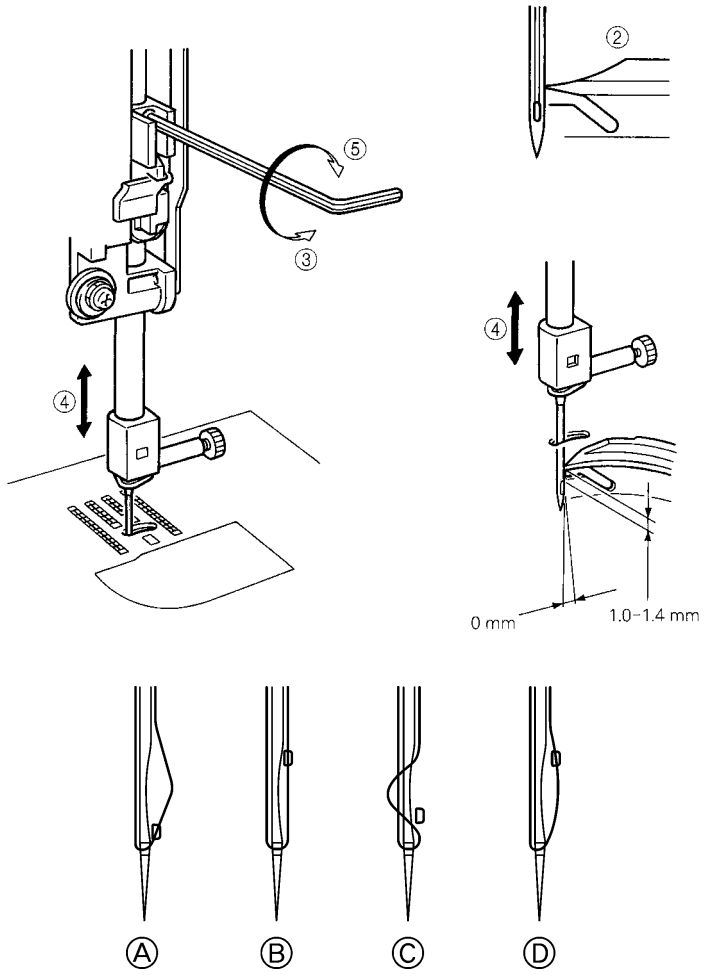

6. LOWER SHAFT

1. Attach the bushing presser L temporarily so as the center of lower shaft is positioned higher by 1 mm against the center of eccentric metal.
2. Install the outer rotary hook.
3. Tighten the screw on the bushing presser L by turning the eccentric metal. Make sure that there is no backlash on the gears.

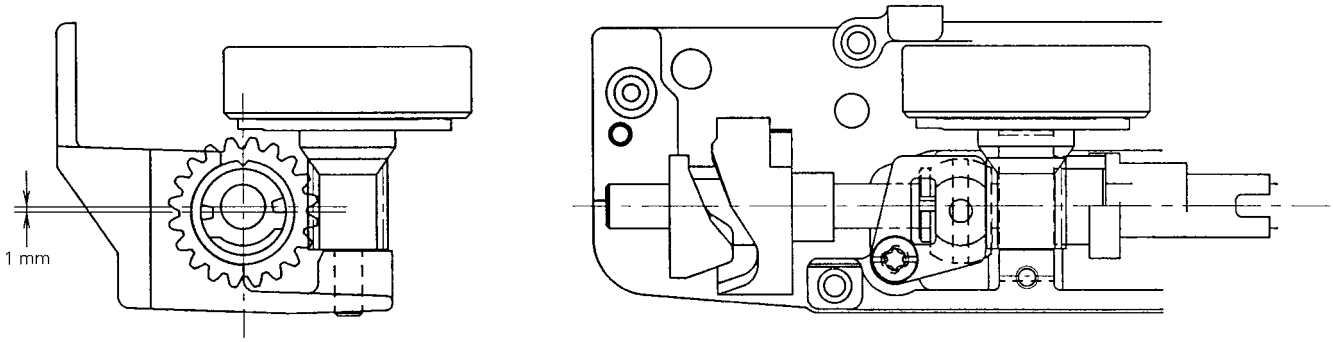

7. FRONT/BACK, LEFT/RIGHT POSITION OF FEED DOG

STANDARD

When test mode "6" is selected, the feed dog can be moved forward/backward and left/right. At this time, the feed dog should not contact the needle plate.
When the front/back position is the maximum feed amount, the clearance between the feed dog and needle plate at the feed start position (when feed dog is at very front) should be 0.5 to 1.0 mm. (Refer to illustration)

ADJUSTMENT

1. Select test mode "6".
2. Loosen the screw securing the horizontal feed plate.
3. Align the feed dog's left/right position.
4. Tighten the screw securing the horizontal feed plate.
5. Move to the feed start position in the test mode.
6. Loosen the screw securing the horizontal feed arm.
7. In the test mode, set the clearance between the feed dog and needle plate to 0.5 to 1.0.
8. Tighten the screw securing the horizontal feed arm.

NOTE: In the test mode, ← and → cannot be used to move the feed dog.

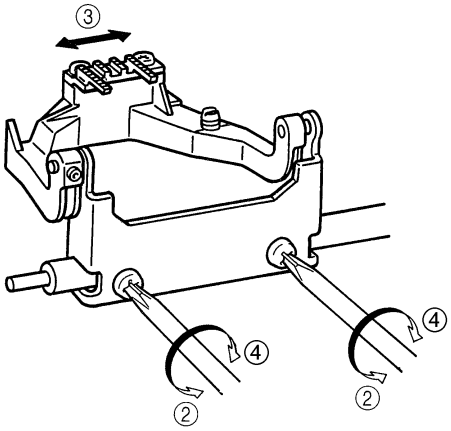

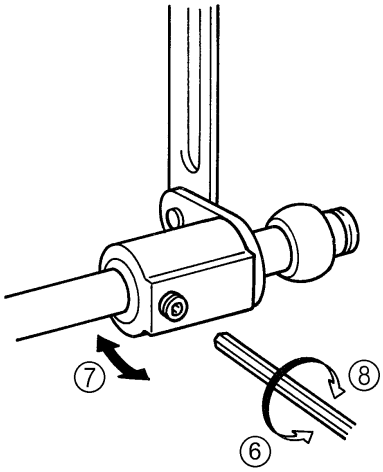

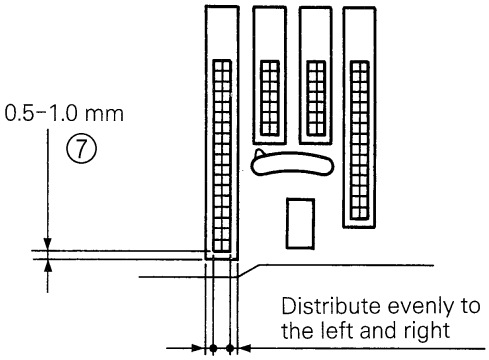

8. HEIGHT OF FEED DOG

STANDARD

When the balance wheel is turned to raise the feed dog to its highest position, the standard height of the feed dog above the needle plate should be 0.9-1.1 mm.

ADJUSTMENT

1. Turn the balance wheel to raise the feed dog to its highest position.
2. Loosen the screw securing the vertical feed roller shaft.
3. Turn the vertical feed roller shaft to adjust the feed dog height to within 0.9-1.1 mm.
4. Tighten the screw securing the vertical feed roller shaft.

Adjustment Points

1. If the feed dog is too high, the feed dog may contact the back of the needle plate, a noise may be generated, an incorrect forward and backward motion of the feed bar may be produced, an incorrect feed may be produced, or the fabric may not feed.
2. If the feed dog is too low, an incorrect feed may be produced or the fabric may not feed.
   (∗ Check by stacking two scales, one on top of the other.)

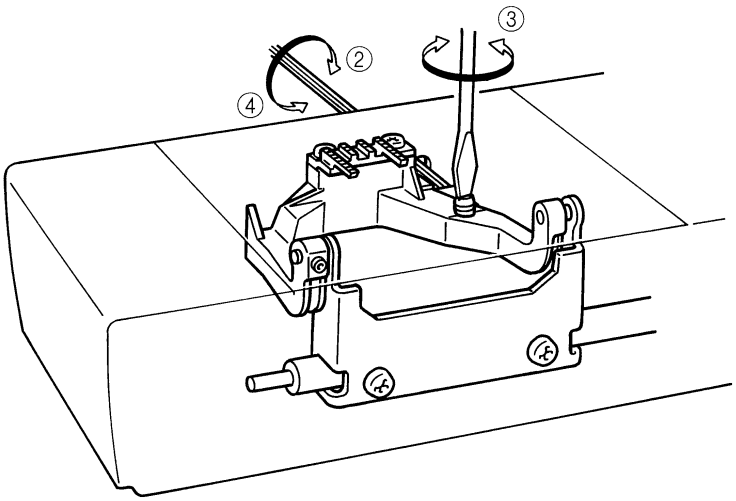

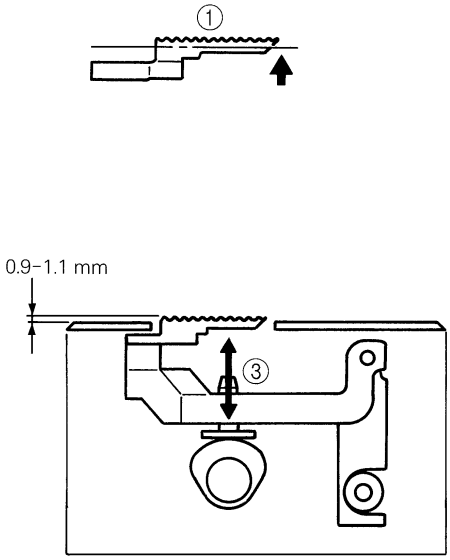

9. PRESSER BAR HEIGHT

STANDARD

The clearance from the needle plate top to the bottom of the presser bar should be 7.0-7.5 mm.

ADJUSTMENT

1. Raise the presser foot lifter.
2. Loosen the screw of the presser bar guide bracket.
3. Adjust the height of the presser bar by moving it vertically.
4. Tighten the screw of the presser bar guide bracket.
   NOTE : The presser foot should be positioned in the center of the needle hole of the needle plate.

Adjustment Points

1. Install presser foot J.
2. When adjusting the presser bar height, the presser foot should be parallel with the feed dog hole in the needle plate. (Refer to (A).)
   ∗ A hexagonal pencil can be used to check the height.
3. If the presser foot is not parallel with the feed dog hole, the needle may contact the presser foot or the fabric may not feed straight while overcasting.
   ∗ After the presser bar height is adjusted, be sure to adjust the fabric thickness detector using test mode "2".

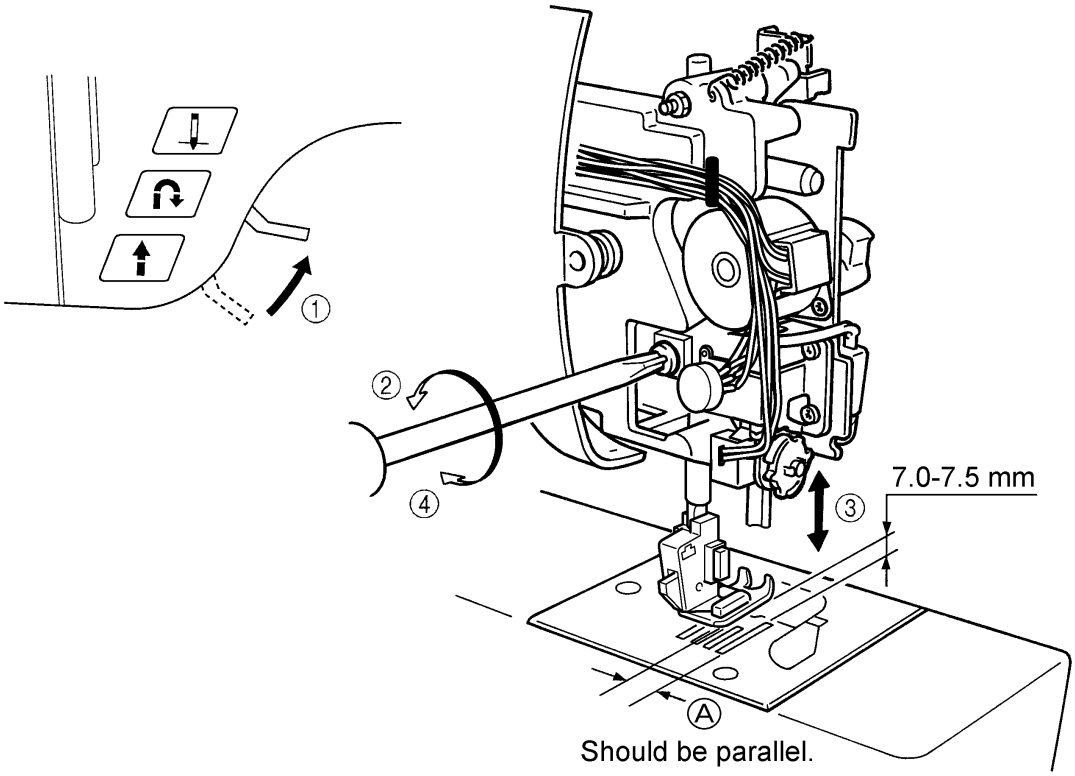

10. CHECKING DETECTION OF FABRIC THICKNESS
(If a new main PC board is installed, this adjustment must be performed.)

STANDARD

When the fabric thickness is set to 0 mm and 3 mm in test mode "2", the buzzer should sound twice if operation is normal.

ADJUSTMENT

1. Select test mode "2".
2. Install the J presser foot and then lower the presser foot and set the needle bar to the lowest position.
3. Press 0 mm on the display. (The buzzer should sound twice.)
4. Insert a spacer with a thickness of 3 mm beneath the J presser foot.
5. Press 3 mm on the display. (The buzzer should sound twice.)

   NOTE : If the values read in steps (3) and (5) are normal, the buzzer will sound twice each time. If they are not normal, the buzzer will sound four times each time.
   If there is an abnormality, perform the procedure again starting from (2).

Adjustment Points

1. Be sure to install presser foot J when adjusting the fabric thickness detector.
2. If you do not have spacer when setting the thickness to 3 mm, place a 3 mm hexagonal screwdriver between presser foot J and needle plate.

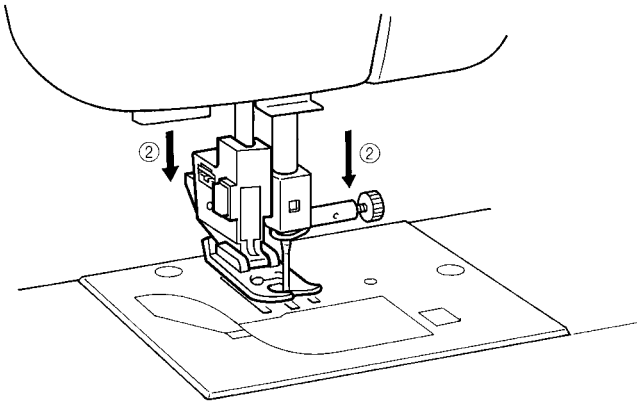

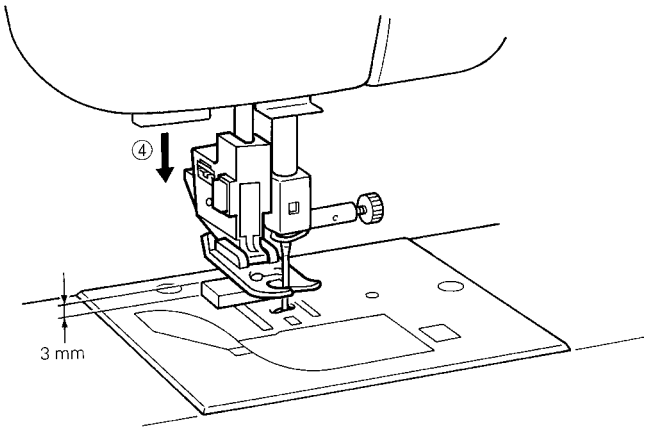

11. EMBROIDERY UPPER THREAD ADJUSTMENT (OPTION)

STANDARD

Select test mode 22.

ADJUSTMENT

1. Select test mode 22.
2. The number of the current setting is displayed at the left of the setting keys.
3. If embroidery thread tension is too low, press the setting with a higher value than current setting to tighten thread tension.
4. If embroidery thread tension is high, press the setting with a lower value than current setting to loosen thread tension.

   NOTE : If thread tension is not set correctly on your sewing machine, problems such as needle breakage and fabric puckering may result.

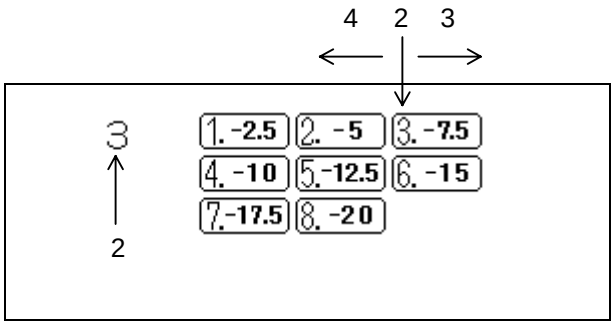

12. POSITION OF BUTTONHOLE SWITCH LEVER

STANDARD

When the buttonhole lever is lowered, the clearance of front part of buttonhole foot is 1.5 mm and the presser foot lever is lowered BH 0 should touch BH 1.

ADJUSTMENT

1. Turn on power switch and select pattern .
2. Fit the buttonhole foot (A). Adjust the clearance to 1.5 mm, and lower the presser foot lever.
3. Adjust the position of buttonhole lever so that BH0 touches BH1 when the buttonhole eccentric shaft is rotated.
   NOTE : In case that the legs are shorter than the standard, bend the BH 1 to be far from BH 0.
   In case that the legs are longer than the standard, bend the BH 2 to be close to BH 0.

Adjustment Point
If the buttonhole eccentric shaft (C) is rotated clockwise, the clearance (D) between BH0 and BH1 widens.
Pull open the buttonhole foot to its maximum and check that the switch can be switched.

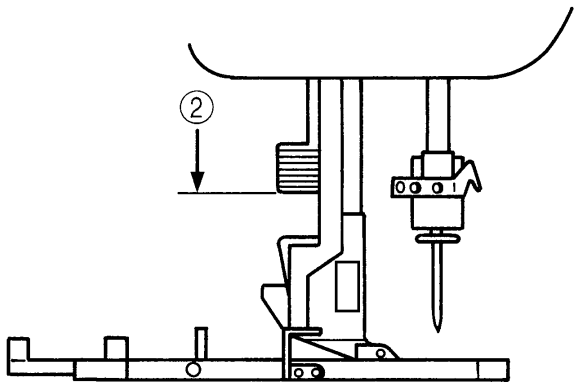

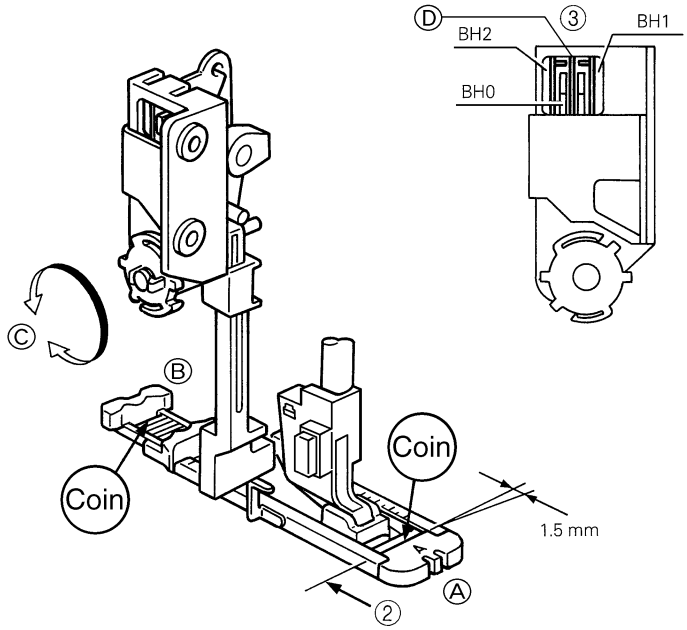

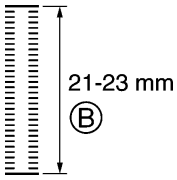

13. BOBBIN WINDER

STANDARD

The thread should be wound parallel to the bobbin and around about 85-90% of the bobbin at low speed.(A)
The clearance between the bobbin winder switch and the bobbin winder assembly should be 0.5-1.0 mm.(B)

ADJUSTMENT

1. Loosen the bobbin winding guide screw.
2. Adjust the bobbin thread amount so that the thread is evenly wound around the bobbin by moving the bobbin winding guide vertically.(C)
3. Tighten the bobbin winding guide screw.
4. Loosen the screw securing the bobbin presser slightly.
5. Turn the bobbin presser to adjust the bobbin thread amount.
6. Tighten the screw of the bobbin presser.
7. Set the bobbin winder assembly to the left.
8. Loosen the screw of the bobbin winder switch.
9. Adjust the clearance between the bobbin winder switch and the bobbin winder assembly to 0.5-1.0 mm.(B)
10. Tighten the screw of the bobbin winder switch.

Adjustment Point
2. If the thread winds as shown by (D), lower the thread guide holder (C). If the thread winds as shown by (E), raise the thread guide holder (C).

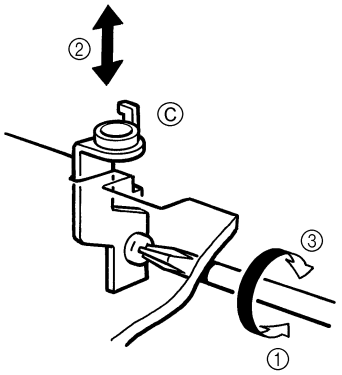

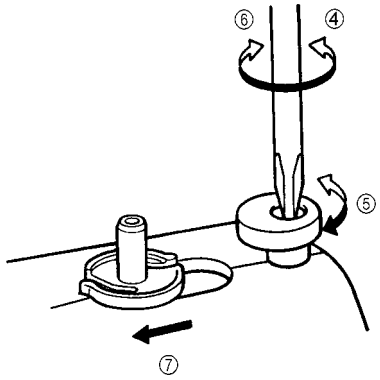

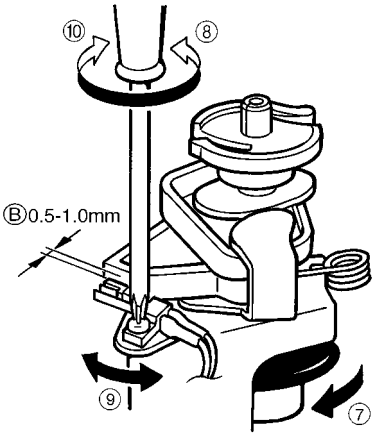

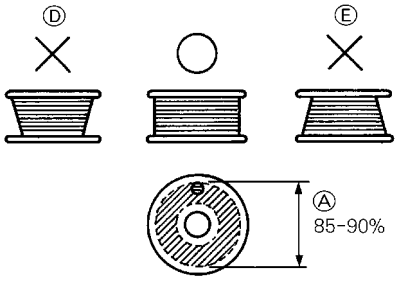

14. BOBBIN THREAD DETECTOR

STANDARD

When the amount of the bobbin thread has decreased until the bobbin diameter is 11.4-11.8 mm, the message "Bobbin thread is running out." should appear on the display.

ADJUSTMENT

1. Select test mode No.21 on the touch panel.
2. Turn the balance wheel in its normal rotation direction, align the opening of the outer rotary hook with the photo diode, and make sure that "0.0" appears on the display.
3. Wind the bobbin thread around the bobbin until the diameter of the bobbin is 11.4-11.8 mm, and set the bobbin in the inner rotary hook.
4. Loosen the screw holding the photo transistor, slightly turn the photo transistor to the left until "-.-" appears on the display. Then turn it to the right until "0.0" appears on the display, and tighten the screw.
   NOTE : Keep the area around the photo transistor and the photo diode clean.
   Remove the lamp during the adjustments.

Adjustment Points

1. Remove the needle plate before making the adjustment.
2. After aligning the opening of the outer rotary hook with the photo diode so that "0.0" appears on the display, the inner rotary hook (A) should contact the bracket while the photo transistor screw (B) is loosened and tightened so that the photo transistor can be adjusted.

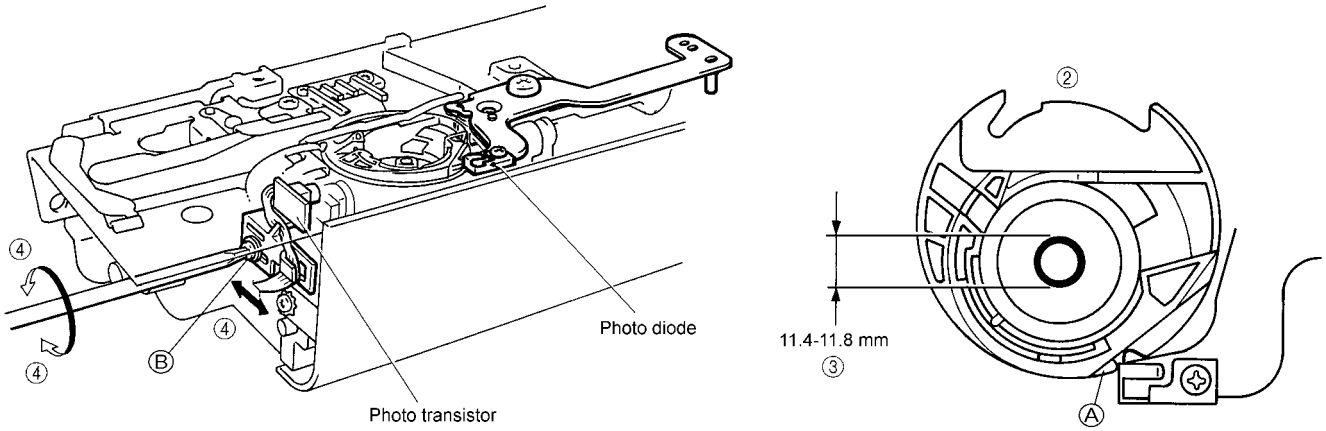

15. INNER ROTARY HOOK BRACKET POSITION

STANDARD

When the inner rotary hook bracket and the rotary hook meet, the spring of the inner rotary hook bracket and the inner rotary hook should overlap each other by 1.9-2.1 mm.

ADJUSTMENT

1. Loosen the screw securing the inner rotary hook bracket.
2. Adjust the position of the inner rotary hook bracket by moving it vertically and/or horizontally.
   NOTE : Surface A of the inner rotary hook bracket should be perpendicular to the feeding direction.
3. Tighten the screw of the inner rotary hook bracket.

Adjustment Point
1. If the inner rotary hook bracket position is moved by a large amount, be sure to check and adjust the bobbin thread detector with test mode "21".

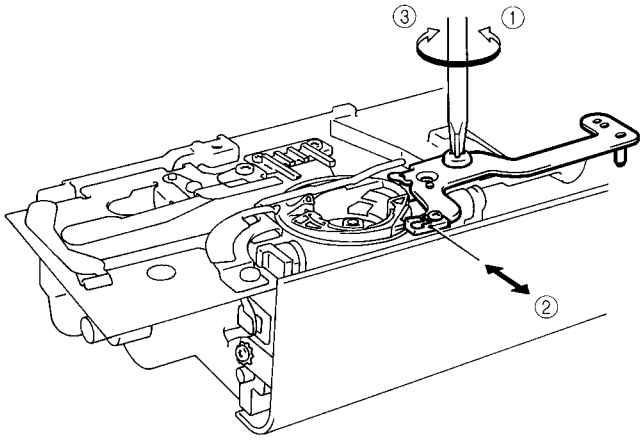

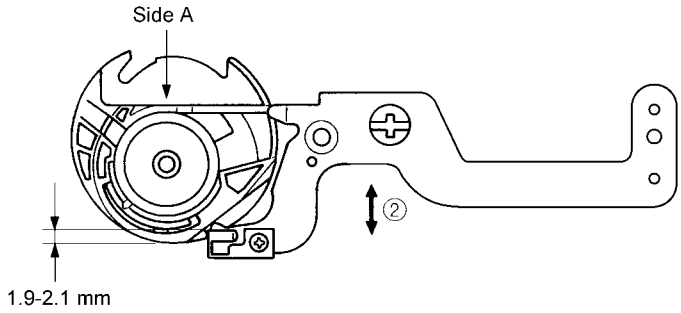

16. LARGE ONE-POINT PATTERN SHAPE (SOFT ADJUSTMENT)

STANDARD

When pattern adjustment "3" is selected in the test mode and the start/stop button is pressed, the vertical separation of the pattern outline should be 1 mm or less.

ADJUSTMENT

1. Select pattern adjustment "3" in the test mode.
2. Press the start/stop button and sew the test pattern outline. * Install presser foot N before sewing.
3. A trial pattern for adjustment purposes can then be embroidered.
   Adjust shapes of stitch using the " ⊞ " and " ⊟ " stitch length keys.

* From -9 to +9

Adjustment Point

1. The pattern should be adjusted using the three settings for each direction (-3 to 3).
   * If the pattern cannot be adjusted using the three settings for each direction, refer to 17. FEED ADJUSTMENT (VERTICAL FEED) on page 35 and adjust the F pulse motor position.

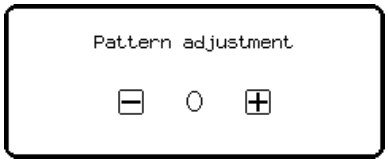

Stitch pattern	Remedy
	Correct shape
	⊟ ○ ⊞
	⊟ ○ ⊞

17. FEED ADJUSTMENT (VERTICAL FEED)

STANDARD

Adjustment of the pattern should be possible in test mode "3".

ADJUSTMENT

1. Loosen the screw securing the pulse motor.
2. Rotate the pulse motor and adjust the pattern.
   * Make sure not to contact the main PC board during the adjustment.
   * Install presser foot N before the adjustment.
3. Tighten the screw securing the pulse motor.

Adjustment Points

* If the pulse motor position is to be adjusted (when the screw is to be turned or the motor is to be moved), turn off the power to the sewing machine in order to reduce the risk of a short-circuit (or damage) to the main PC board with the screwdriver.

1. If the pattern is open as shown by (B), move the pulse motor slightly backward.
2. If the pattern is overlapping as shown by (A), move the pulse motor slightly forward.

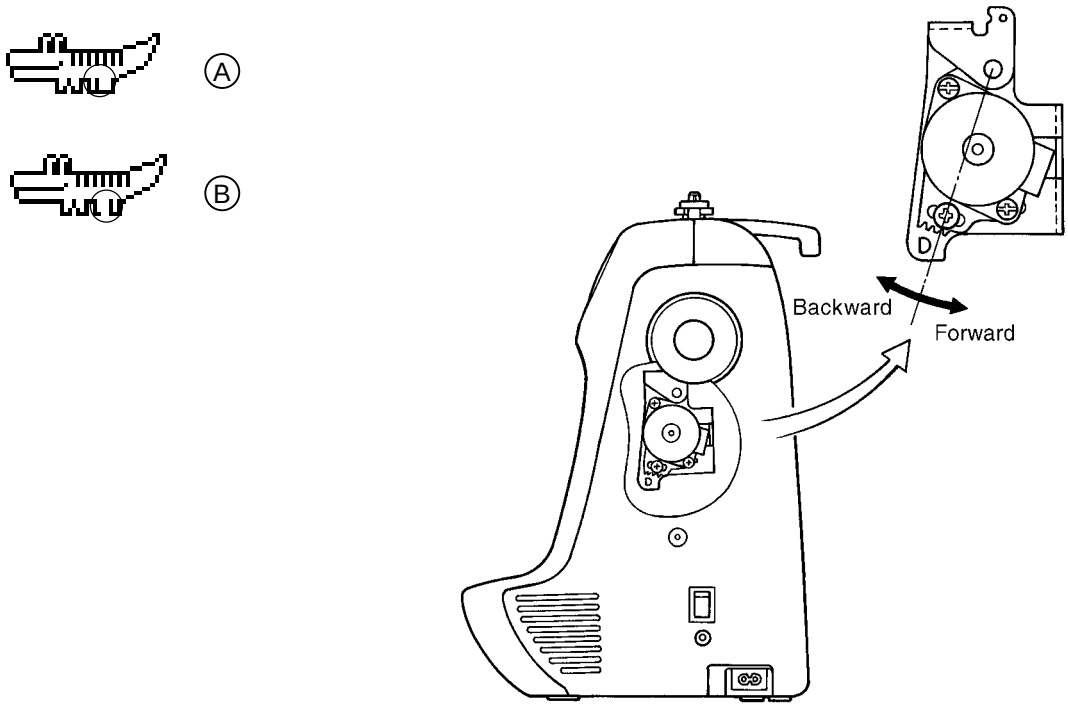

18. INNER ROTARY HOOK TENSION

STANDARD

While slowly pulling polyester thread #60 using a tension gauge, inner rotary hook tension should be 0.1-0.12N (10-12g). The difference between this and the tension for silk thread (#80) should be 0.02-0.03N (2-3g).

ADJUSTMENT

1. Pass polyester thread #60 through the inner rotary hook correctly, and pull it using the tension gauge.
2. Adjust the tension by turning the screw to either the right or left using a screwdriver.
   NOTE : After adjusting the tension, lock the screw with paint.

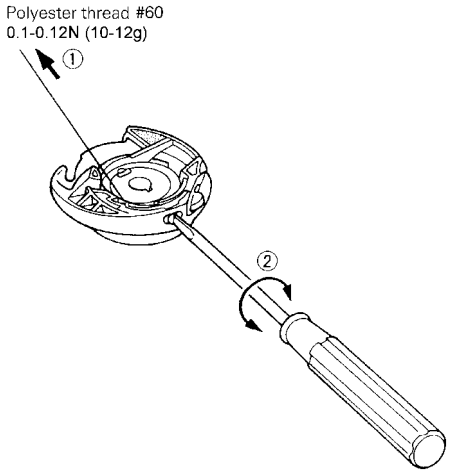

19. NEEDLE THREADER

USING THE NEEDLE THREADER

There are a wide variety of different needles and sewing machine threads available. The right ones should be selected in accordance with the sewing conditions. The accessory needle threader is designed to make threading of needles easier, but it cannot handle every single circumstance of use (combinations of needle and thread) that may occur. It can be used with some combinations but not with others, and if it can be used, the pattern may not be sewn correctly due to the particular sewing conditions. Do not use the needle threader without gaining a thorough understanding of how to use it, otherwise the needle threader may be damaged or needle threading may not be possible. Be sure to read and understand the following so that you can handle customer complaints.

NOTE :

1. Needle threader accepts only circled needle and thread combinations.
2. Combinations marked with a * are not recommended since they might lead to the breakage of needle threader imperfect performance.
3. Lower the presser foot when you use needle threader.
4. Nylon transparent thread is applicable in needle #14-16.
5. Do not turn the balance wheel when using needle threader.
6. Do not lower the needle threader lever while the machine is running. If it is lowered, the needle threader may be broken, rendering it unusable. Besides this, it may cause the needle to break, which could result in injury.
7. If a #9 needle is used, the variation in needle precision may result in the needle being slightly difficult to thread.
8. Needle should be located above needle plate by more than 8 mm for threading.
9. Needle threader does not work when you use the side-cutter.
   Thread the needle before attaching the side cutter.
10. When doing embroidery, use a #11 needle. Use special Brother #50 embroidery thread and #50-#80 silk thread for the embroidery thread.

Thread / Needle	#30	#50	#60	#80	#100	#120
#9	×	×	×	O	O	O
#11	×	O	O	O	O	*
#14	×	O	O	O	*	*
#16	*	O	O	*	*	*
#18	*	*	*	*	*	*

20. NEEDLE THREADER (CHECKING THE HOOK POSITION IN HORIZONTAL DIRECTION)

STANDARD

The measure from inside of the hook guard to the center point of hook is 0.42 mm.

CHECK

As sewing needle HA X1 (#14) is standard, so prepare five brand-new sewing needles HA X1 (#14) and check by changing all of these.

After Checking,

1. In case that, hook goes through eyelet of all needles ..... There is no problem.
2. In case that, hook does not go through eyelet of all needles ..... Adjust by bending hook.
3. In case that, hook does not go through eyelet of some needles..... Needles through which the hook does not go through are defective.

(Example for checking)
When you check five brand-new sewing needles HA X1 (#9) on condition that it achieves above first case, if the hook does not go through eyelet of all of these needle, all five needles are defective and you judge the hook position is not defective.

ADJUSTMENT

In case the hook is defective after above checking, adjust the hook by bending with pliers. Do not bend the hook guard at this time.

21. NEEDLE THREADER (EXCHANGE)

HOW TO EXCHANGE NEEDLE THREADER

1. Remove the needle and lower the presser foot lifter.
2. Push down the needle threader and take it out.
3. Place a new one so that the guide is immediately under the guide pin as shown in figure A.
4. Push needle threader all the way up so that the guide is placed in the pin.

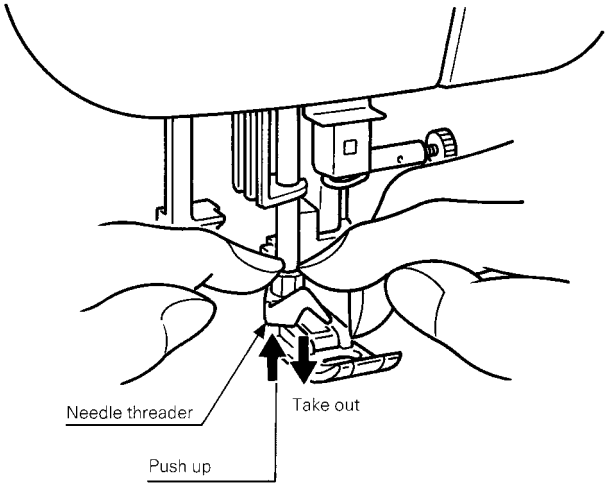

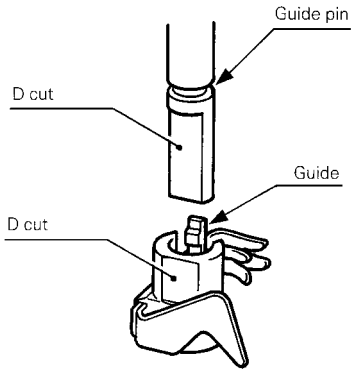

Figure Ⓐ

22. NEEDLE THREADER (CHECKING THE HOOK IN STANDARD POSITION)

STANDARD

1. The clearance between the top of hook and the top of needle eye is 0 mm.
2. Threading is possible when needle is located higher than 8 mm from the needle plate.

CHECK (refer to illustration)

Case A
Hook position is too high. (Hook hits needle and cannot go through needle eye.)
Case B
Hook position is too low. (Hook goes through needle eye but it catches bottom part of needle eye.)

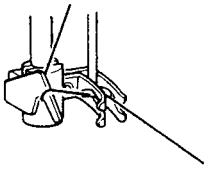

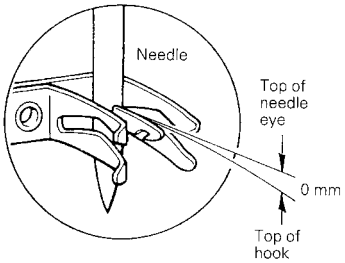

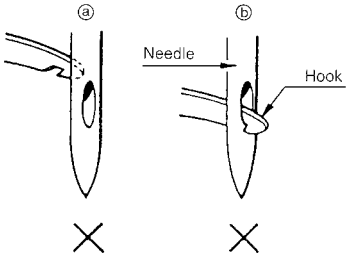

23. NEEDLE THREADER (CHECKING THE HOOK POSITION IN VERTICAL DIRECTION)

Case A (Hook point is too high)

1. Remove face plate and loosen the screw.
2. Adjust needle threader position setter slightly down and check that the clearance between the top of hook and top of needle eye is 0 mm.
3. Check that the needle threader position setter (a) and the needle bar crank rod assembly (b) is parallel.

Case B (Hook point is too low)
Adjust needle threader position setter slightly up and check the clearance between the top of hook and top of needle eye is 0 mm.
In case part (a) and part (b) is not parallel or the hook does not work, readjust needle threader by loosening the screw.

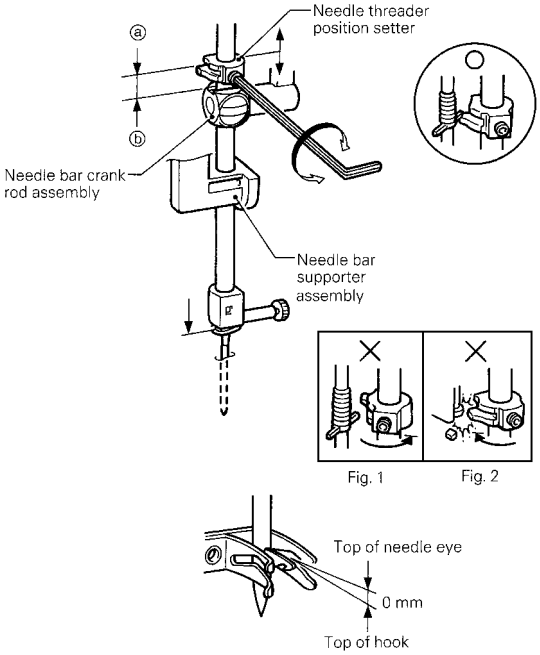

If (a) and (b) are not parallel, the needle threader will not be held by the needle threader position setter (refer to Fig. 1), the hook will not enter the eyelet of the needle (hook will not move) and the needle will not be threaded when the needle threader lever is lowered. In this case, loosen the screw securing the needle threader position setter and turn the needle threader position setter slightly to the left to make it parallel.
In addition, if the needle threader position setter is turned too far so that it is still not parallel too left, it may hit other parts, causing damage (refer to Fig. 2). If a part is damaged, it must be replaced. If no part is damaged, loosen the screw securing the needle threader position setter and turn the needle threader position setter slightly to the right to make it parallel.

EMBROIDERY UNIT ADJUSTMENTS (OPTION)
24. TIMING BELT TENSION FOR THE X DIRECTION

STANDARD

There should be 4 ± 1 mm slack in the timing belt looped around the X driving shaft and the X tension pulley shaft, when the center of the belt is pressed by a force of 1.2N (120g) after the X carriage unit is moved all the way to the right.

ADJUSTMENT

1. Move the X carriage unit all the way to the right.
2. Loosen the screw of the X tension pulley.(screws (A) and (B))
3. Adjust the position of the X tension pulley.
4. Tighten the screw of the X tension pulley.(screws (A) and (B))

Adjustment Point
If the tension in the belt is too weak or too tight, the embroidery may not be aligned correctly (the inside of the pattern may not align with the outline).

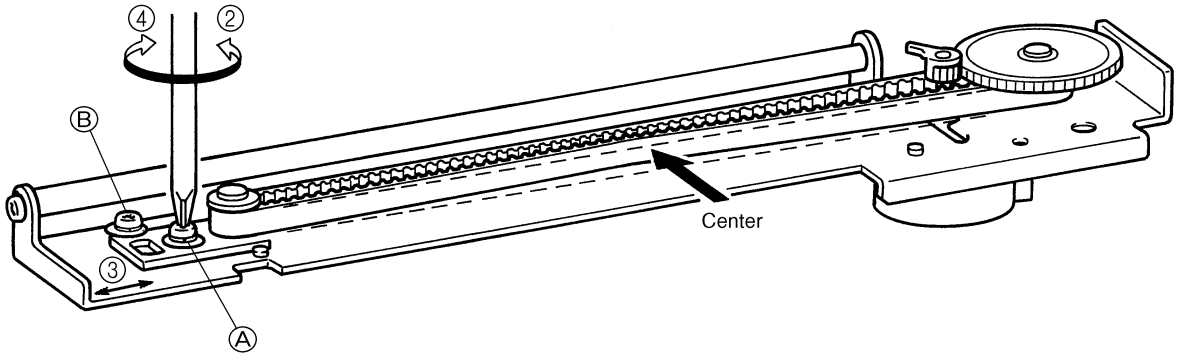

25. TIMING BELT TENSION FOR THE Y DIRECTION

STANDARD

There should be 4 ± 1 mm slack in the timing belt when the center of timing belt at the Y drive shaft and Y tension pulley is pressed with a force of 1.2N (120g) after the Y carriage is moved all the way forward.

ADJUSTMENT

1. Move the Y carriage all the way forward.
2. Loosen the screw of the Y tension pulley.(screw (C))
3. Adjust the position of the Y tension pulley.
4. Tighten the screw of the Y tension pulley.(screw (C))

Adjustment Point
If the tension in the belt is too weak or too tight, the embroidery may not be aligned correctly (the inside of the pattern may not align with the outline).

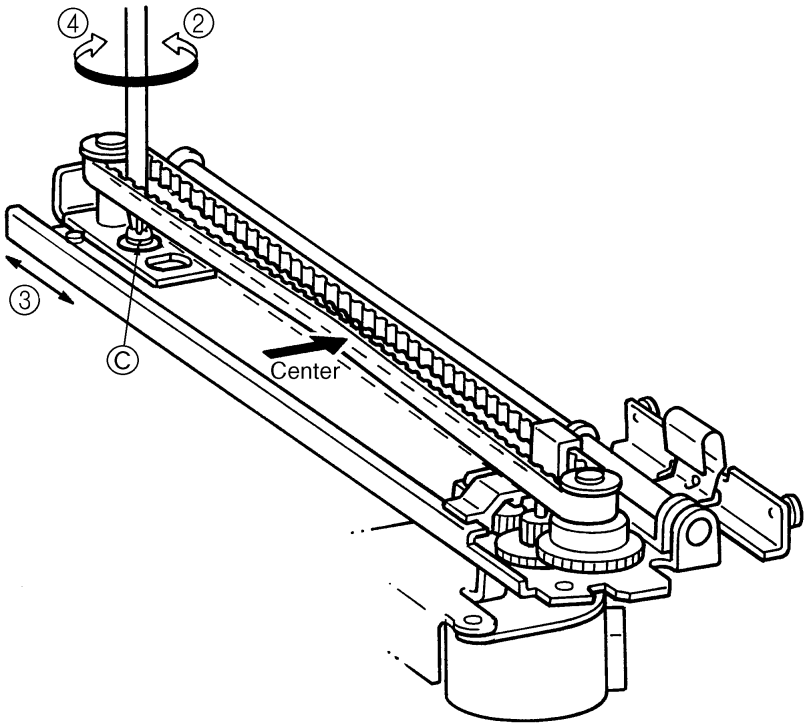

IV. HOW TO ADJUST ELECTRONIC ELEMENTS

1. When power is turned on, buzzer does not sound and nothing appears on display 48
2. After the power is turned on, pulse motors do not return to their home positions with respect to the needle position. 48
3. Pattern cannot be selected 48
4. Main motor does not run 49
5. Operation of main motor is not stable, maximum speed operation is not possible, or speed cannot be adjusted 49
6. Correct patterns are not created 49
7. Buttonholes are not stitched correctly 49
8. Manual operation of feed and zigzag pulse motors is not possible 50
9. Vertical movement of needle bar and backstitch operation are abnormal 50
10. Foot controller does not operate normally when depressed 50
11. Thread tension is not correct 50
12. Needle bar release mechanism does not operate correctly 50
13. Thread cutter does not operate correctly 50
14. Display does not appear clearly 50
15. The LCD light does not light 51
16. Thread cannot be wound around bobbin 51
17. Needle thread breakage detector does not operate correctly 51
18. Bobbin thread detector does not operate correctly 51
19. Embroidery unit does not work correctly (OPTION) 51

∗ You must turn off the power and remove connectors from printed circuit boards before measuring resistance.

PROBLEM	CHECK	REMEDY
1. When power is turned on, buzzer does not sound and nothing appears on display.	1) Has the display contrast been adjusted? 2) If the voltage between both inlet terminals is measured when the power cord is plugged in, is the standard voltage (120 VAC, 220V, 230V, 240V) displayed? 3) When power switch is set to on, is resistance between both ends less than 1 Ω? 4) Remove connector CN6 from the power supply board, and check following voltages using a tester: Voltage between pins 2 and 3 should be 5 VDC. Voltage between pins 4 and 5 should be 20 to 30 VDC. 5) Is fuse blown? 6) Others	1) Adjust the contrast. 2) Replace the power cord. 3) Replace power supply unit assembly. 4) Replace power supply unit assembly. 5) Replace fuse after correcting defect that caused fuse to blow. 6) Replace main PC board assembly.
2. After the power is turned on, pulse motors do not return to their home positions with respect to the needle position. (Zigzag pulse motor when needle bar is raised and feed pulse motor when needle bar is lowered.)	1) Are the resistances between the connector pins given below normal for the pulse motors which do not return to the home position? Zigzag (CN14) ... 1-3, 2-4 → 8-10 Ω Feed (CN15) ... 1-3, 2-4 → 8-10 Ω 2) Set the home position for the same pulse motors irrespective of needle position. 3) Is a fuse blown? 4) Is the voltage between pins 4-5 normal when the connector (CN6) which is output from the power supply board is disconnected? Between 4-5 20-30 VDC 5) Others	1) Replace the pulse motor or lead wire assembly which shows an abnormality. 2) Replace NP board assembly. 3) Replace fuse after correcting defect that caused fuse to blow. 4) Replace power supply unit assembly. 5) Replace main PC board assembly.
3. Pattern cannot be selected.	1) Does switch on SS PC board remain pressed? 2) When the foot controller is connected, does it remain depressed? 3) Others	1) Adjust or exchange SS PC board assembly. 2) Check foot control unit operation. 3) Replace LCD module, or main PC board.

4. Main motor does not run.	1) Does balance wheel rotate easily? 2) Is main motor connector (CN2 on power supply unit) attached properly? 3) Is resistance of both ends on main motor connector (CN2 on power supply unit) 120V spec 30-50Ω or 220-240V spec 110-150Ω? 4) Do start/stop switch, backstitch switch, needle position switch, and thread cutter switch operate correctly? Resistances between ends of each switch should be; under 1Ω when switch is pressed. infinite when switch is released. 5) Is presser foot lifter lowered? Does presser foot switch operate correctly? When presser foot lifter is lowered, voltage between pins 2-1 of fabric thickness detector (CN12) is under 2VDC. When presser foot lifter is raised, it is over 3VDC. 6) Others	1) Adjust mechanical positions to reduce the heavy torque. 2) Check connector connection. 3) Replace main motor. 4) Replace SS PC board assembly. 5) Check fabric thickness detection or replace fabric thickness sensor assembly. 6) Replace main PC board or power supply unit assembly.
5. Operation of main motor is not stable, maximum speed operation is not possible, or speed cannot be adjusted.	1) When turning on power and moving speed slide, does voltage between pins 3 and 2 of connector CN8 (for speed slide) change from 0 to 5 VDC? 2) When turning balance wheel, do voltages between pins 2-1, pins 4-1, pins 5-1, and 6-1 of connector CN13 (for NP board) change to either 0 or 5 VDC? 3) Others	1) Replace VR board assembly. 2) Replace NP board assembly. 3) Replace main PC board.
6. Correct patterns are not created.	1) If the power is turned off and the needle bar is moved horizontally by hand, does it move easily? 2) Are the resistances between the connector pins for the zigzag and feed pulse motors normal? Zigzag (CN14) ... 1-3, 2-4 → 8-10 Ω Feed (CN15) ... 1-3, 2-4 → 8-10 Ω 3) Do the voltages between pins 2-1, 5-1 and 6-1 of the N.P. board assembly connector (CN13) alternate between 0-5 VDC when the sewing machine is turned slowly? 4) Others	1) Adjust the installation position so that it moves easily. 2) Replace pulse motor or lead wire assembly. 3) Replace NP board assembly. 4) Replace main PC board assembly.
7. Buttonholes are not stitched correctly.	1) Is the stitch foot set correctly? 2) Is the resistance between pins 4-5 of the BH switch connector (CN11) normal? When buttonhole lever is lowered .... 1 Ω or less When buttonhole lever is raised .....∞ 3) When the buttonhole lever is lowered and in the conditions below, is the resistance between pins 1-2 and 2-3 of the BH switch connector (CN11) normal? Between 1-2 Between 2-3 Buttonhole lever is pulled forward.....1 Ω or less ∞ Buttonhole lever is pushed back..... ∞ 1 Ω or less 4) Others	1) Check stitch foot. 2) Adjust button hole lever or replace BH switch assembly. 3) Adjust button hole lever or replace BH switch assembly. 4) Replace main PC board assembly.

8. Manual operation of feed and zigzag pulse motors is not possible.	1) Do manual keys of feed and zigzag pulse motors turn off and on normally, and do the LCDs change? 2) Are the resistances between the pins below of the feed and zigzag pulse motors normal? Feed (CN15) ... 1-3, 2-4 → 8-10 Ω Zigzag (CN14) ... 1-3, 2-4 → 8-10 Ω 3) Others	1) Replace LCD module. 2) Replace feed pulse motor, zigzag pulse motor or lead wire assembly. 3) Replace main PC board assembly.
9. Vertical movement of needle bar and backstitch operation are abnormal.	1) Are the resistances between both sides of the SS PC board assembly switches 1 Ω or less and in the k Ω range respectively when the switches are turned on and off? 2) Do the voltages between pins 2-1, 4-1, 5-1 and 6-1 of the NP board assembly connector (CN13) alternate between 0-5V when the sewing machine is turned slowly? 3) Is the bobbin winder switch turned off? 4) Others	1) Replace SS PC board assembly. 2) Replace NP board assembly. 3) Adjust the bobbin winder mechanism. 4) Replace main PC board assembly.
10. Foot controller does not operate normally when depressed.	1) Is the resistance between pins 2-3 of the pin jack connector (CN1) 1 Ω or less when there is no pin jack and ∞ when there is a pin jack? 2) Does the resistance between pins 1-3 of the pin jack connector (CN1) change from the low Ω range to 10 k Ω when there is a pin jack and the foot controller is depressed? 3) Others	1) Replace pin jack assembly. 2) Replace foot controller or jack assembly. 3) Replace main PC board assembly.
11. Thread tension is not correct.	1) Is thread route correct? 2) Are the 0 mm and 3 mm fabric thickness adjustments correct? 3) Turn off power and lower presser foot. When turning AT pulse motor gear manually, does it turn easily, and together with roller? 4) Are resistances between pins 1-3 and pins 2-4 of connector CN16 (for AT pulse motor) 8 to 10 Ω? 5) Is the voltage between pins 2-1 of the connector (CN12) for the fabric thickness detection under 2 VDC when the presser foot is lowered and over 3 VDC when it is raised? 6) Others	1) Check thread route. 2) Check. 3) Adjust or replace ATPM holder complete. 4) Replace AT pulse motor or ATPM lead wire assembly. 5) Replace thickness sensor of fabric assembly. 6) Replace main PC board.
12. Needle bar release mechanism does not operate correctly.	1) Does needle bar release mechanism operate smoothly? 2) Are resistances between pins 1-3 and 2-4 of connector CN14 (for zigzag pulse motor) 8 to 10 Ω? 3) Others	1) Adjust needle bar release mechanism. 2) Replace Z pulse motor or ZPM lead wire assembly. 3) Replace main PC board assembly.
13. Thread cutter does not operate correctly.	1) Does the thread cutter move lightly? 2) Are resistances between pins 1-3 and 2-4 of connector CN15 (for feed pulse motor) 8 to 10 Ω? 3) Others	1) Adjust the thread cutter mechanism. 2) Replace F pulse motor or FPM lead wire assembly. 3) Replace main PC board assembly.
14. Display does not appear clearly.	1) Is the voltage between pins 8-7 of the connector (CN9) for LCD module -5 to -10VDC? 2) Others	1) Replace main PC board assembly. 2) Replace LCD module or main PC board assembly.

15. The LCD light does not light.	1) Is the voltage between pins 4-5 20 to 30 VDC when the connector (CN6) which is output from the power board is disconnected? 2) Is fuse blown? 3) Is the voltage between pins 9-10 of the LCD module connector (CN9) approx. 9 VDC? 4) Others	1) Replace the power board assembly. 2) Replace fuse after correctly defect that caused fuse to blow. 3) Replace main PC board assembly. 4) Replace LCD module assembly.
16. Thread cannot be wound around bobbin.	1) Is resistance between both ends of connector CN5 (for bobbin winder switch) under 1 Ω when thread is wound, or infinity in other cases? 2) Is bobbin winder attached correctly? 3) Others	1) Replace bobbin winder switch assembly. 2) Adjust bobbin winder position. 3) Replace main PC board.
17. Needle thread breakage detector does not operate correctly.	1) When passing thread through thread route and setting thread condition as follows, is voltage between pins 2-1 of connector CN10 (for needle thread breakage detector) correct? When thread is tensioned..... 0 VDC When thread is loose..... 5 VDC 2) Others	1) If condition does not change after adjusting thread take-up spring, replace needle thread breakage detecting PC board. 2) Replace main PC board.
18. Bobbin thread detector does not operate correctly.	1) Are both ends of bobbin thread detector correctly positioned? 2) Is voltage between pins 1-2 of connector CN18(for bobbin thread detecting LED) approx. 1 VDC? 3) After inserting the bobbin as follows, is voltage between pins 2-1 of connector CN17(for bobbin thread detecting photo-transistor)correct? Bobbin without thread..... 0.1 to 0.2 VDC Bobbin with thread..... 2 to 5 VDC 4) Others	1) Correct directions of bobbin thread detector ends. 2) Replace photo-diode assembly. 3) Replace photo transistor assembly. 4) Replace main PC board.
19. Embroidery unit does not work correctly. (OPTION)	1) Is your card a embroidery card? Is embroidery unit connected to sewing machine correctly? 2) Is embroidery unit installed in sewing machine correctly? Are timing belt tension, gear meshing, and wiring correct? 3) Are resistances between pins 1-3 and 2-4 of connectors on X and Y pulse motors (where embroidery unit is installed) 8-10 Ω? 4) When embroidery unit is installed, are resistances between pins 1-3 and 2-4 of connectors CN19 and CN20 on X and Y pulse motors 8-10 Ω?. 5) Are resistances between pins 5-6 of connector CN19 on the X pulse motor correct in the following states? When embroidery unit is installed.....1 Ω or less When embroidery unit is removed.....infinite 6) Does a malfunction occur in the initial positioning of carriage when the power is turned on? 7) Others	1) Check your card and connection between embroidery unit and sewing machine. 2) Adjust position of embroidery unit. (Torque of embroidery frame is important.) 3) Replace X or Y pulse motor or lead wire assembly. 4) Replace lead wire assembly or connector 176496. 5) After confirming the installation of X pulse motor lead wire assembly, replace X pulse motor lead wire assembly, connector 176496, lead wire assembly or X sensor PC board assembly. 6) Replace X or Y sensor PC board assembly. 7) Replace main PC board assembly.

Main PC board

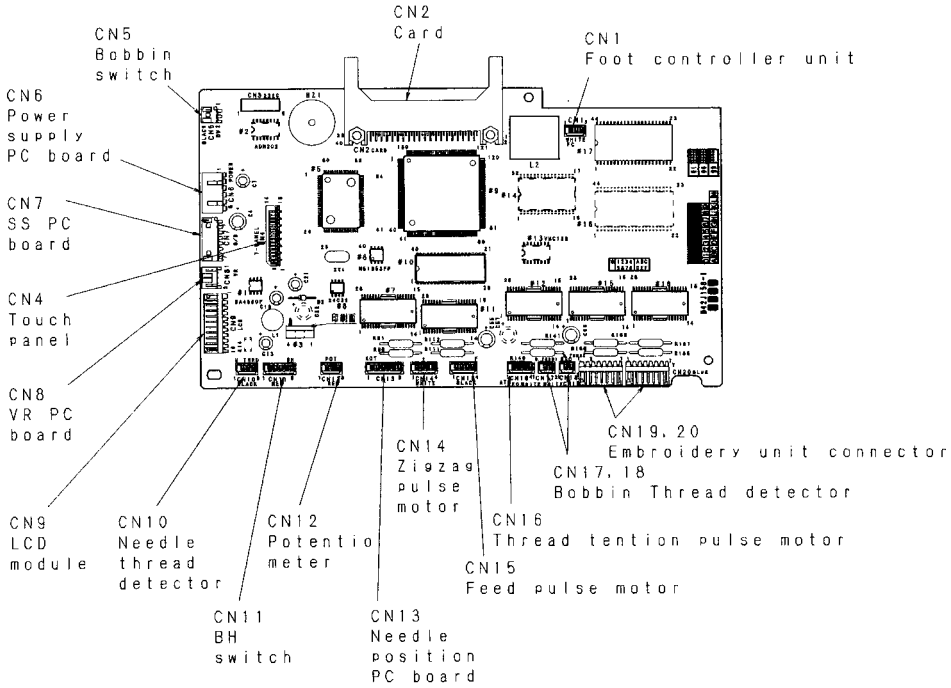

Power supply unit

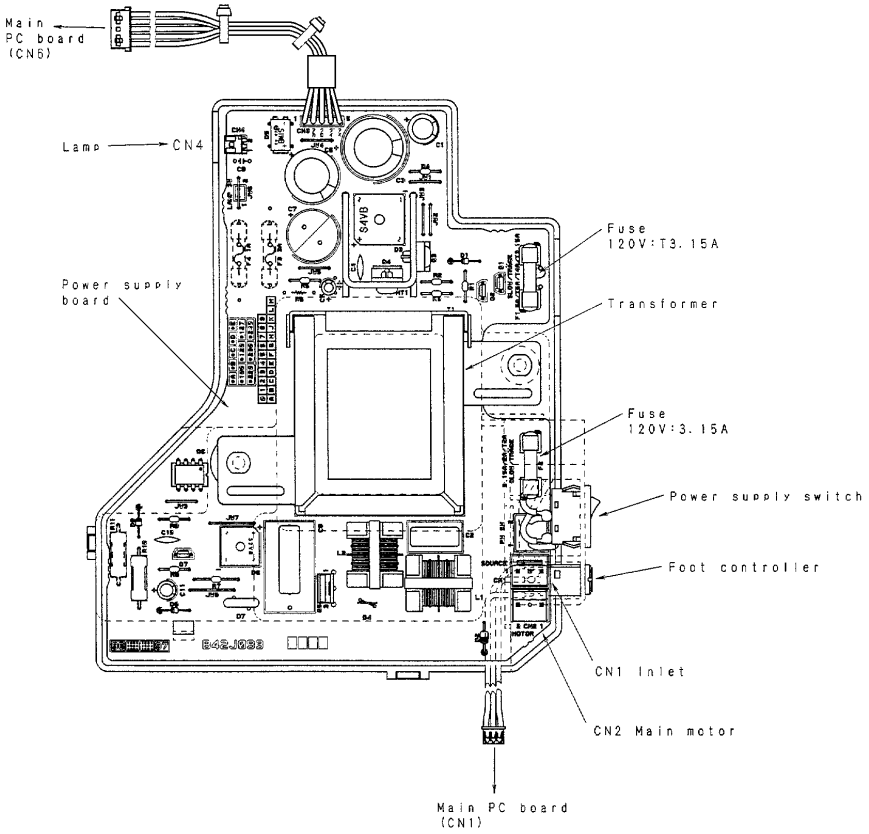

LCD unit

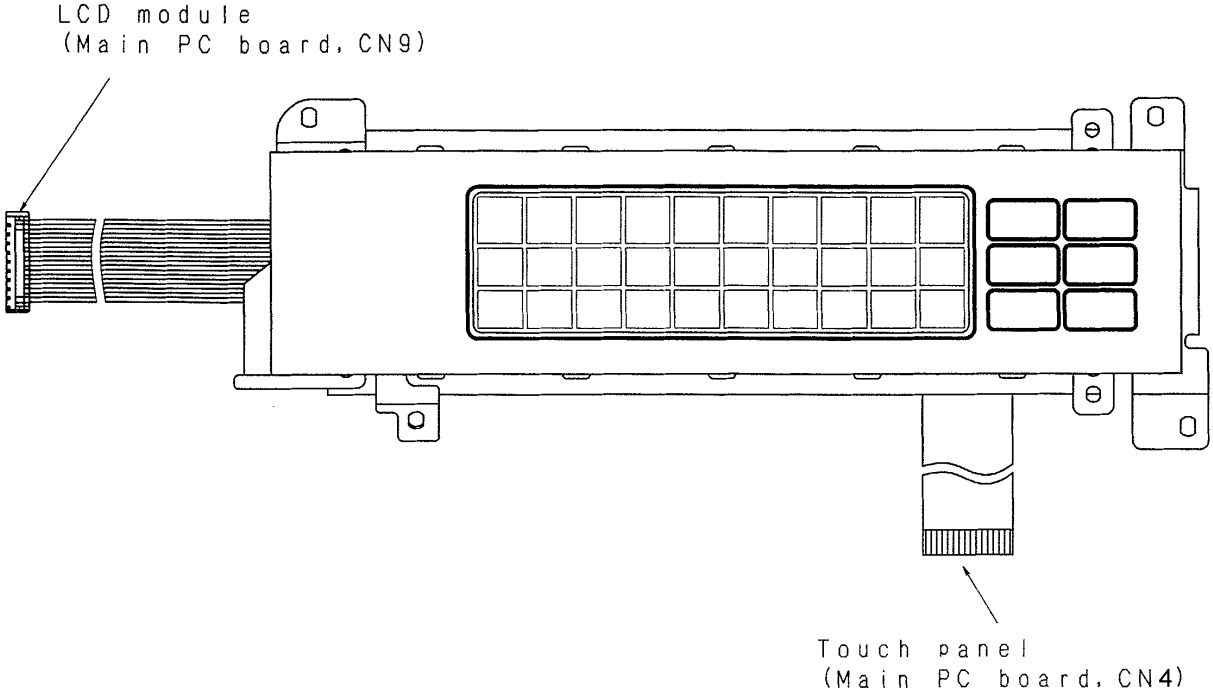

Other PC boards

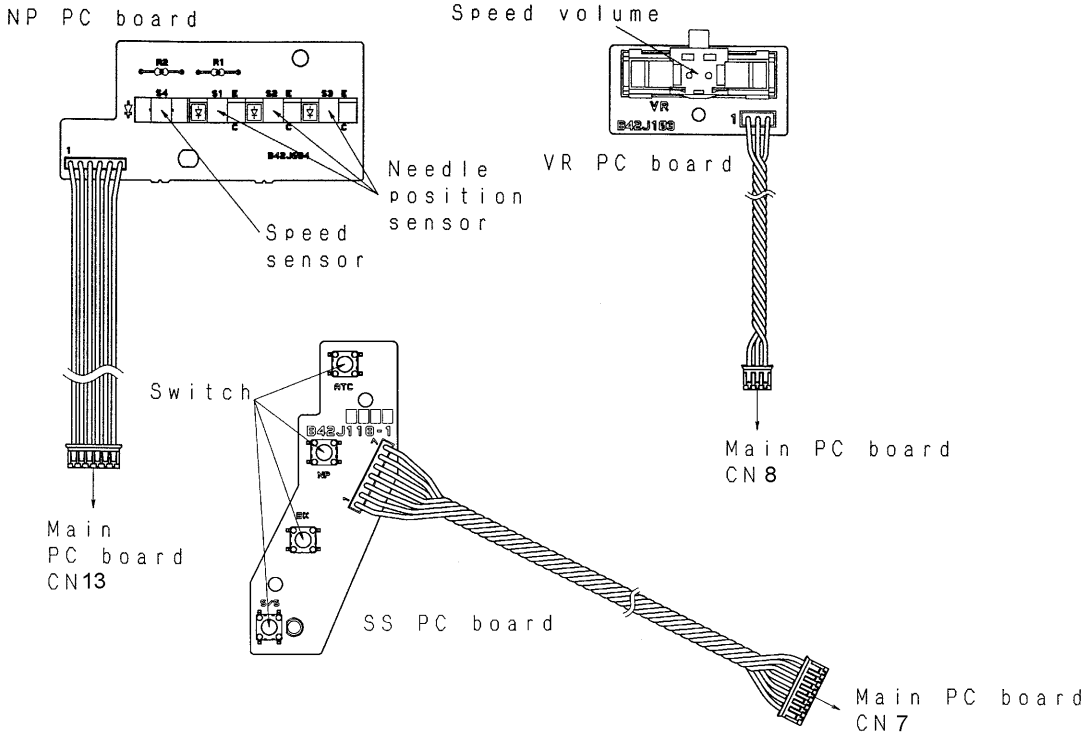

SUPER ACE+e
T1030146