PFAFF

performance 2056

german engineering

Service Manual and Test Program

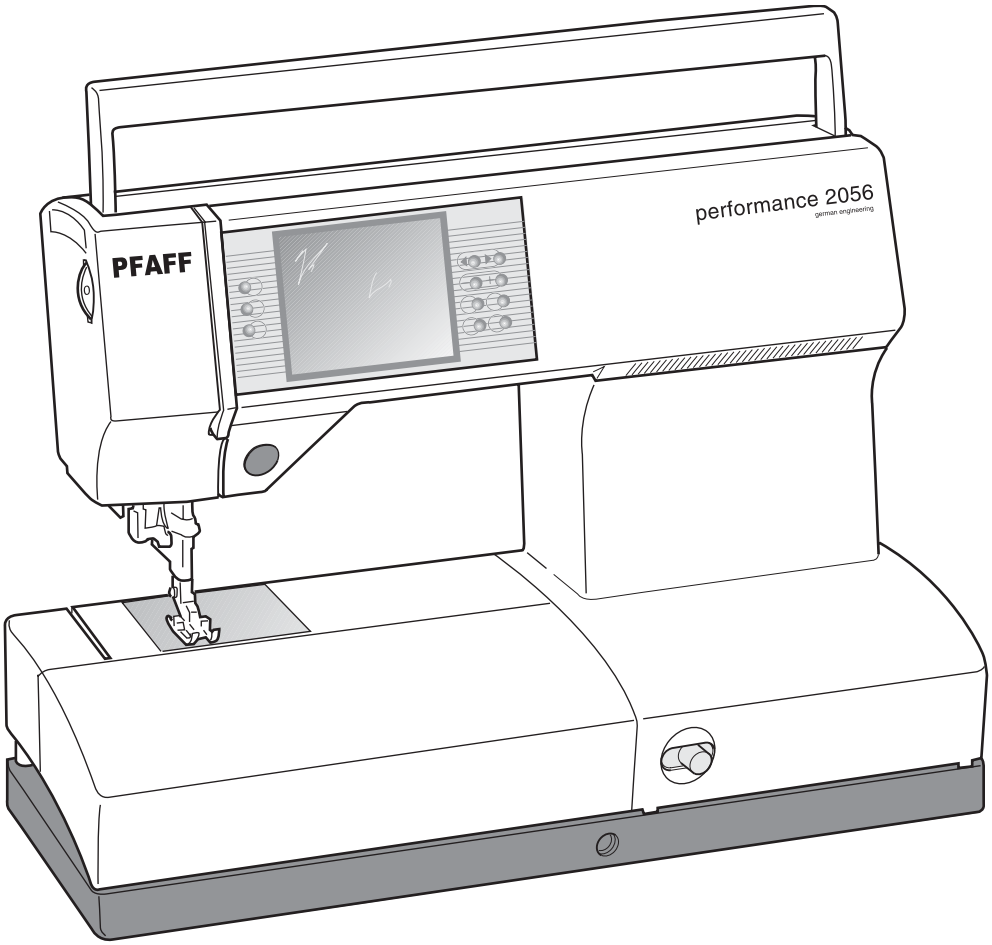

1st edition August 2004

Page

Contents 3
Foreword 5
Notes on the sewing machine 6
Specifications 7
Dismantling the housing 10

Feeding System

1. Adjustment of the flat-toothed belt tension 17
2. Adjustment of feed dog in sideways direction 18
3. Timing of feed motion 20
4. Adjustment of feed dog height 22
5. Adjustment of synchronizer 24
6. Adjustment of presser foot height 26
7. Adjustment of top feed foot in sewing direction 27
8. Adjustment of top feed height 28
9. Adjustment of the height of the free motion foot 30

Zigzag mechanism

10. Adjustment of needle in needle hole 32

Stitch forming parts (Hook)

11. Position of needle in needle hole in sewing direction 35
12. Adjustment of hook-to-needle clearance 38
13. Adjustment of bevel gears 39
14. Sewing hook timing 40
15. Adjustment of needle bar height 42
16. Adjustment the bobbin case position finger 43

Stitching off

17. Adjustment of needle threader 44
18. Adjustment of bobbin winder stop 46
19. Adjustment of bobbin thread tension 47
20. Adjustment of needle thread tension 48
21. Adjustment of thread check spring stroke 50
22. Adjustment of equal forward and reverse stitch length 52
23. Making up a sewing sample 54

Repair Instructions

24. Dismantling and assembling the needle thread tension 55
25. Changing the torsion spring in handwheel 56
26. Dismantling and assembling sewing hook 58
27. Cleaning and oiling the machine 58
28. Changing the flat-toothed belt 60
29. Changing the bevel gears 66
30. Changing the base circuit board 70
31. Changing the upper circuit board 72
32. Changing the keypad 74
33. Changing the synchronizer circuit board 76
34. Changing the motor 78
35. Changing the cable in the foot control 80
36. Changing the upper stepping motor 82

Page

37. Changing the lower stepping motor 84
38. Changing the SD motor unit 86
39. Ajusting the toothed rocker 90
40. Changing the buttonhole sensor 94
41. Changing the thread monitor with free-arm cover 96
42. Changing the needle threader 98

Upgrade of the performance 2056

43. Upgrade from a PC via a serial interface on the machine 99
44. Calibrating the Touch panel 100
45. Calibrating the knee lift potentiometer 100

Important special functions of the performance 2056

46. Display contrast 101
47. Version number and status 101
48. Programmed patterns 102
49. Options for messages 102
50. Delete the mashine memory 102
51. Demonstration 102

Machine test

52. Test program 103

Test start

53. Display 103
54. Buttons 103
55. Touch panel 104
56. Signal generator 104
57. Foot control 105

Stepping motors

58. Sewing unit 105
58. Presser foot unit 105
59. Buttonhole control 106
60. Synchronizer 107
61. Machine motor 108
62. Bobbin thread monitor 108
63. Overload protection 109

All tests 109
Test end / Test result 109

Foreword

This service and repair manual is intended to assist you in carrying out all repairs to the machines quickly and correctly.
Adjustments should only be carried out if you find the actual settings deviating from the requirements described here.
When checking or adjusting a machine, please always proceed in the sequence specified.
For easier reference every workstep is marked with a dot.
Differing worksteps are marked with a circle or square.
The indications „right“, „left“, „top“, „bottom“, „front“ or „rear“ always refer to the upright machine with its controls facing the operator.

When assembling dismantled machines, make approximate adjustments right in the course of work.
This facilitates subsequent precise adjustments.
If not specified otherwise, the handwheel must always be turned to the front.
Always pull out the mains plug before making repairs to live parts or in their vicinity.

For correct adjustment of the machines, the following gauges and tools are required:

Needle rise gauge	61-111600-02/000
Needle rise clamp	61-111600-35/000
Spacer	63-102600-18/000
Adjustment gauge for bobbin case position finger	61-111621-15/000
Presser foot gauge	63-114690-39/000
Pointer gauge	63-114690-23/000
Pin gauge	63-114690-09/000
Allen key 1.5 mm	07-433005-28/000
Combination spanner (wrench) 6.0 mm	07-433007-50/000
Torx screwdriver TX 6	07-434008-40/000
Torx screwdriver TX 8	07-434008-41/000
Torx screwdriver TX 10	07-434008-44/000
Torx screwdriver TX 15	07-434008-45/000
Torx offset screwdriver TX 15	07-434008-74/000
Torx screwdriver TX 20	07-434008-46/000
Torx screwdriver TX 25	07-434008-47/000
Circlip fitting tool 2.3 kz	07-437003-20/000
Circlip fitting tool 3.2 kz	07-437003-30/000
Circlip fitting tool 4.0 kz	07-437003-40/000
Circlip fitting tool 5.0 kz	07-437003-50/000
Circlip fitting tool 6.0 kz	07-437003-60/000
Circlip pliers A1	07-438000-50/000
Spring hook	07-437006-00/000

Subject to alterations in design and dimensions.

Notes on the sewing machine with regard to ambient conditions, treatment, cleaning and safety

Ambient conditions:

The recommended ranges are:
Ambient temperature -10° to 40°C (50° to 104°F)
Air humidity 20 % to 80 %

This machine is a high-quality electro-mechanical device. It is designed for household purposes and should always be supervised when in use.
Make sure that it is not subjected to:
dust, severe dampness, direct sunlight, static electricity, heat-producing objects, corrosive chemicals or liquids.
The machine must be used on a free surface, for ventilation purposes, which is both firm and even.

Treatment:

Always protect the machine against damage by hitting or dropping.

Cleaning:

Housing:

To clean the housing, use a dry, clean and soft cloth which is free of fluff. To remove any stubborn dirt, use a soft cloth with a neutral cleansing agent for plastic materials.

Please note!
Do not use any insecticides or chemical products such as petrol (gas) or thin chemicals for cleaning the housing.

Display:

If necessary, clean display with a soft cloth moistened with a little water.

Safety:

1. The machine must be put into operation according to the indications on the specification plate.
2. Do not place any objects in openings on the machine.
3. Do not use the sewing machine if:
   - there is visible damage,
   - its function is disturbed,
   - it is wet, e.g. with condensation.
4. Do not pull the mains plug out of the socket by its cord.
5. If this appliance is used for another purpose than that intended or if it is wrongly operated, we will not accept any liability for any damage caused.
6. To avoid the risk of electric shock, do not open the machine. There are no parts inside the machine which the user can repair. This is solely the responsibility of our qualified service staff.
7. Be sure to use only original PFAFF parts.

Specifications of the PFAFF performance 2056

- Electronic free-arm, utility and fancy stitch sewing machine
- 1/4 VGA - touchscreen black-white graphic - display with 2 additional grey shades
- 16 bit processor with 8 Kbyte RAM and 1Mbyte Flash-memory, 512 Kbyte PEROM
- Stitch width = 0 - 9 mm with 45 full steps or 90 half steps
- Stitch length = 0 to 6 mm forwards and 0 to 6 mm reverse with a total of 30 full steps or 60 half steps in each direction
- A full step is 0.2 mm and a half step 0.1 mm
- Keys for slow sewing, pattern start, presser foot lifting, needle up and down, tie off, pattern reflection
- stitch balance, and info menu
- 19 different needle positions
- One 7.5° stepping motor for needle zigzag motion 30 V (contact current switching controller)
- One 7.5° stepping motor for feed control 30 V (contact current switching controller)
- 2-track synchronizer
- Electronically controlled needle „up“ positioning
- Key for reverse sewing or for finishing a manual buttonhole
- Digital motor control with 950 r.p.m. max. speed
- Approx. 100 - 950 stitches per minute
- Several stitch-length-dependent reduced speeds in addition
- Built-in test program
- When machine is blocked, the motor is switched off automatically after 1 - 2 secs. (Followed by approx. 4 secs. interruption before sewing process can be continued.)
- Machine: voltage change-over 115/230 V, 50 - 60 Hz
- Low-voltage motor
- High-ohm foot control (cold)
- FM radio and TV screened, approval marking; safety class II with CE, VL, CSA test markings
- Master switch for motor, electronics and sewing lamp
- Built-in glarefree sewing lamp 12 V/5 W
- Needle threader Pendulum-type needle bar frame.
- Transmission of drive from arm shaft to lower shaft by flat-toothed belt, transmission ratio 1:1.
- Lockstitch of types 301, 302, 303, 304, 305, 308 and all other variants obtainable by sideways needle movement or forwards and reverse control of the machine feed
- Link take-up
- Integrated double feed (IDT - System)
- Outside positioned feed dog lowering mechanism
- Pfaff - double rotary hook
- Manual thread cutter
- Handwheel with automatic torsion spring clutch
- Manual and automatic presser foot lifting with knee lift lever
- Lower thread rest control
- Program update via RS232 interface
- Programmable pattern combinations
- Twin needle warning symbol
- Programmable, semi automatic and automatic buttonhole
- Automatic tapering
- Automatic lock stitch (beginning and end of seam)
- 195 sewing programs with all useful utility - and fancy stitches
- 4 alphabetes with 245 letters, numbers and symbols
- Snap-on sewing feet and snap-on needle plate

- 1 integrated spool pin and 1 connectable spool pin
- Buttonhole guide
- Carrying case with storage compartment
- Detachable work support with accessory compartment
- Drive from motor to handwheel by flat toothed belt
- Calotte metal bearings
- Oil for calotte metal bearings: BP Energol HLP 46 or HLP 80 No. 91-129 940-91
- Presser foot lifting 8 mm
- Presser foot overlifting 10,5 mm
- Presser foot pressure 13N+2
- Machine height: 290 mm
- Baseplate dimensions: 402 x 175 mm / machine length 408 mm
- Machine width 187 mm
- Free-arm dimensions: 80, 49, 200 mm
- Freearm length (in the right of needle) 158 mm
- Housing and baseplate material: die-cast aluminium
- Machine weight without carrying case: 8.3 kg
- Needle system 130/705 H

- **Additional needle system classifications:**

  Twin needle Suffix = Zwi
  Wing needle Suffix = Wing
  Twin hem stitching needle Suffix = Zwi-Ho
  Long needle eye Suffix = N
  Stretch needle Suffix = PS
  Denim needle Suffix = J

- **Possible needle points:**

  Small ball point Suffix = SES
  Medium ball point Suffix = SUK
  Large ball point Suffix = SKF
  Pointed cloth point Suffix = J
  Leather point right hand Suffix = LR

Specifications of drive motor for the PFAFF performance 2056

No. 93-038 506-91/000	24 V =	50W	8000 r.p.m.

ESD

Warning!

It is of utmost importance to be careful to protect parts from electrostatic discharge (ESD).
To prevent this from happening, circuit boards must be handled in a controlled way.

Always use strap 412 23 02-01 for maintenance work.

Dismantling the housing cover

Note: Before adjusting or repairing the machine, make sure dismantle the housing covers according to the adjustment and repair instructions.

- Pull out the mains plug and the socket on the machine.
- Remove the needle and the presser foot shoe.
- Remove the detachable work support.
- Remove the top cover.
- Unscrew and remove the two torx screws of the housing insert.
- Remove the housing insert.
- Slightly raise both lugs 1 and remove the facing panel of the front housing panel by swiveling it downwards (fig. 1).
- Remove connection plug 2 and 3 from the circuit board (fig. 2).

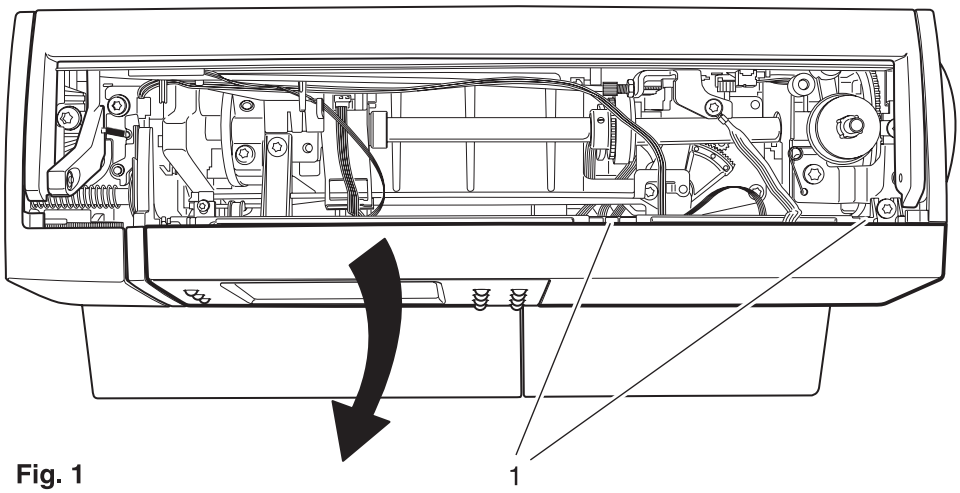

Fig. 1

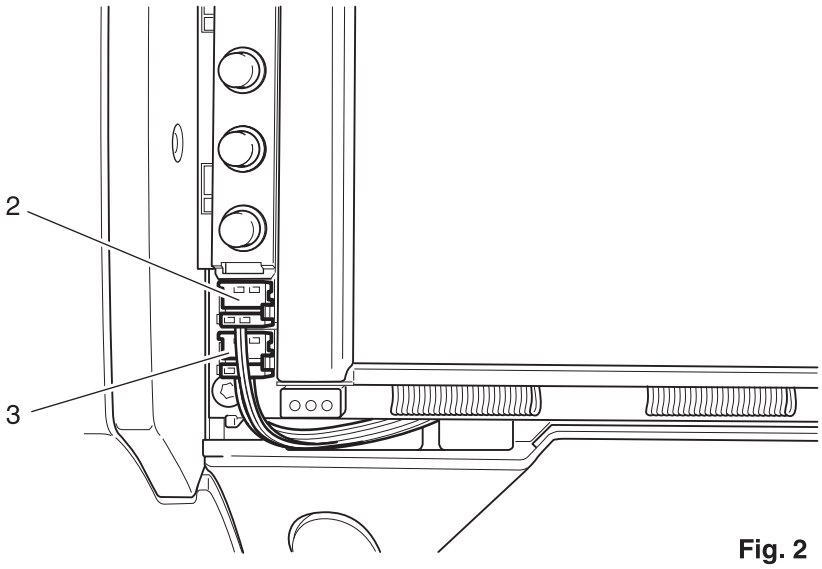

Fig. 2

- Loosen the torx screw on the face plate.
- Remove the complete face plate together with the sewing lamp and cable (fig. 3).
- Remove the carrying handle.
- Unscrew and remove the three fastening screws on the baseplate.
- Tilt the baseplate toward the front.
- Remove 12-wire flat cable 4, remove 6-wire flat cable 5 and motor cable 6 from the circuit board (fig. 4).

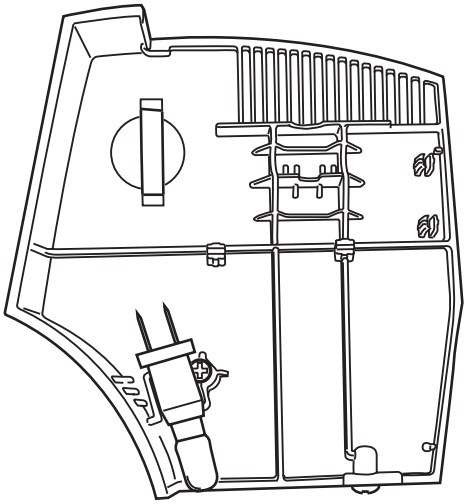

Fig. 3

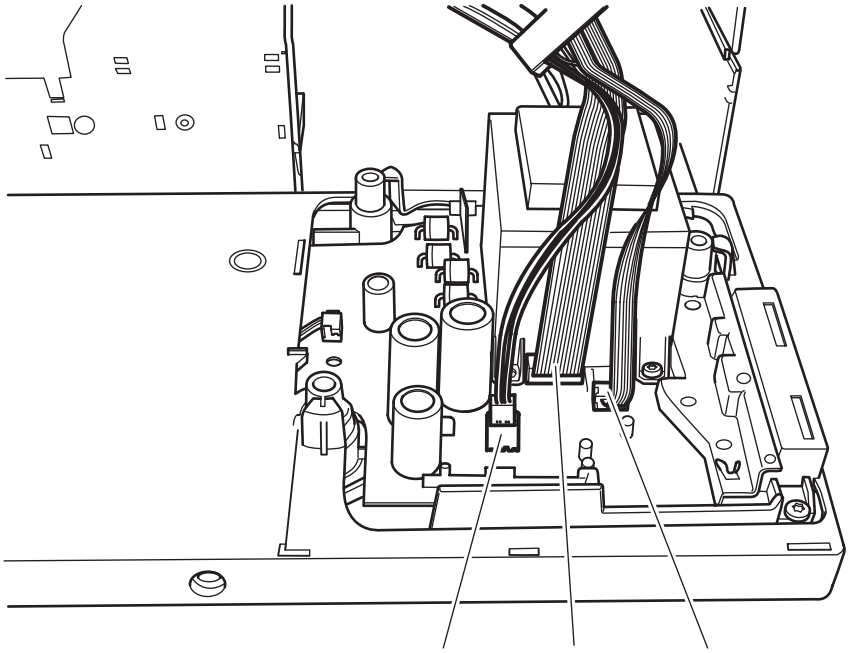

Fig. 4

- Unscrew and remove both fastening screws 7 on the free-arm cover (fig. 5).
- Put the feed drop mechanism in its normal working position.
- Using a small screwdriver, disengage both feed regulators 8.
- Open the cable clip.
- Remove the green connection plug 9 from the circuit board (fig. 6).
- Remove the free-arm lid carefully from the housing, to the left.

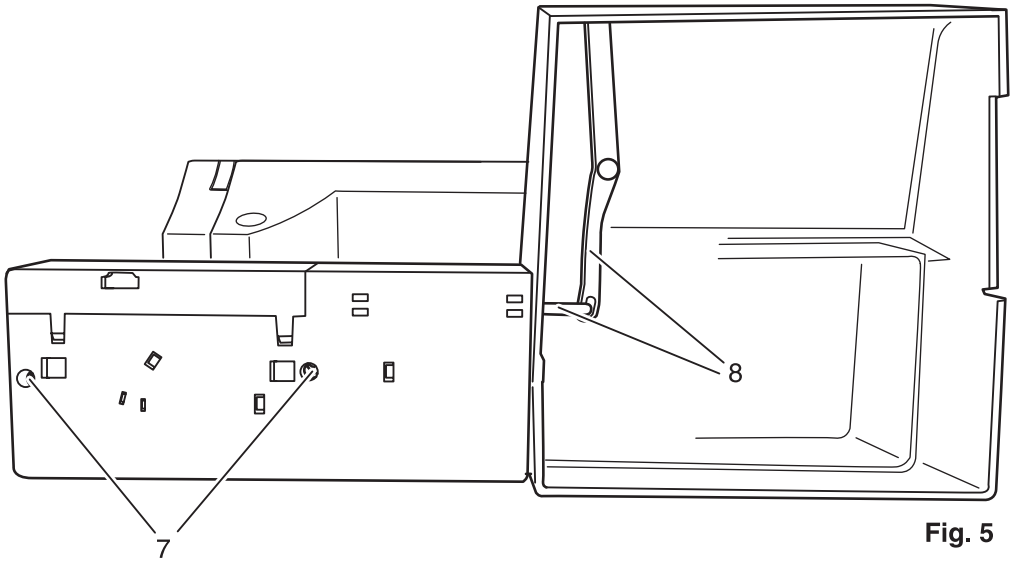

Fig. 5

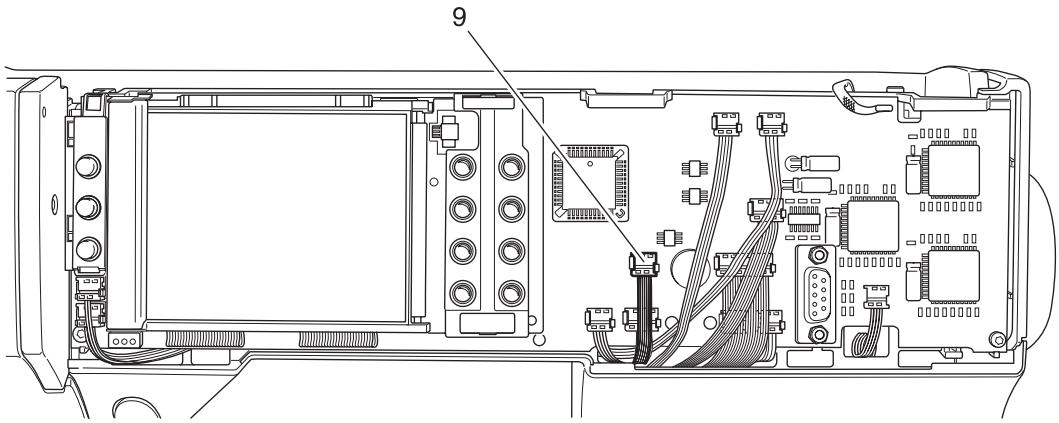

Fig. 6

- Remove the needle plate.
- Unscrew and remove both fastening screws 10 (fig. 7).
- Remove the free-arm cover.

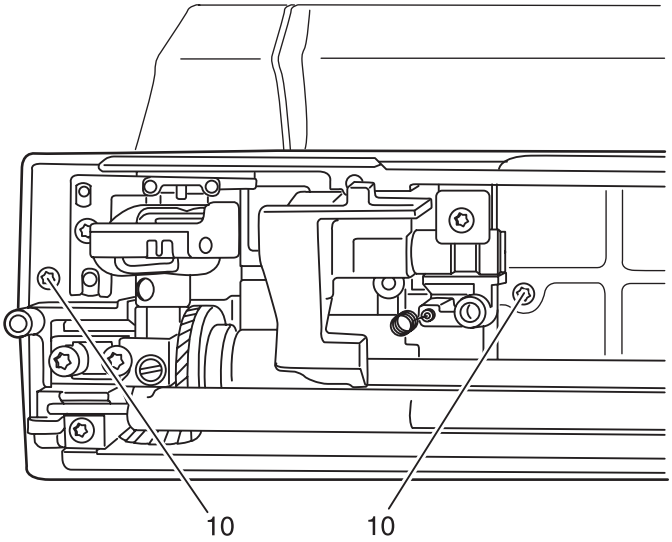

Fig. 7

- Loosen screw 11 on the stand cover (fig. 8).
- Remove the stand cover.

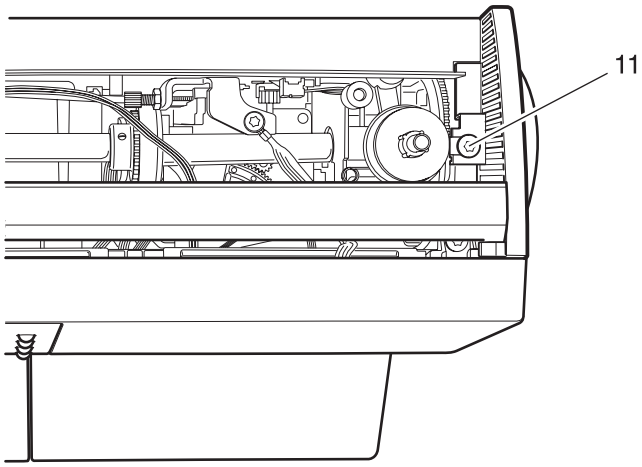

Fig. 8

- Remove fastening screw 12 and 13 on the rear housing shell (fig. 9 and 10).
- Open the catch connections on the inside of the arm by pressing with your thumb against the points indicated by the arrows (fig. 11).
- Remove the rear housing shell.

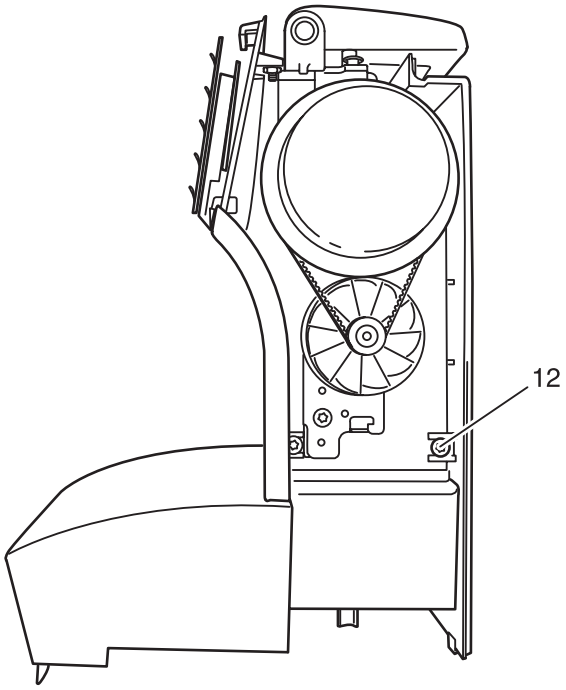

Fig. 9

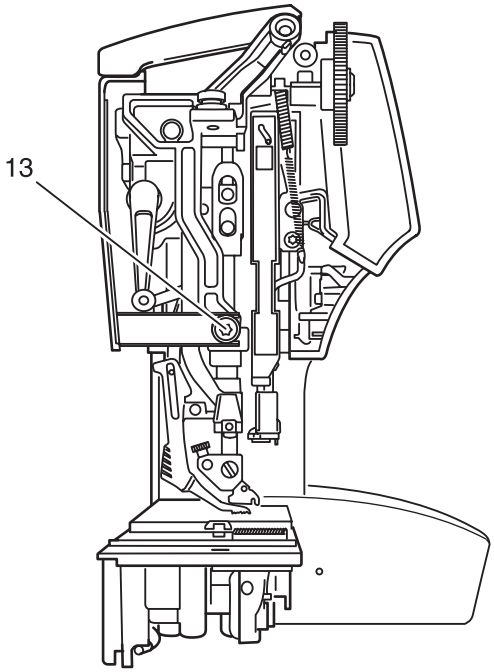

Fig. 10

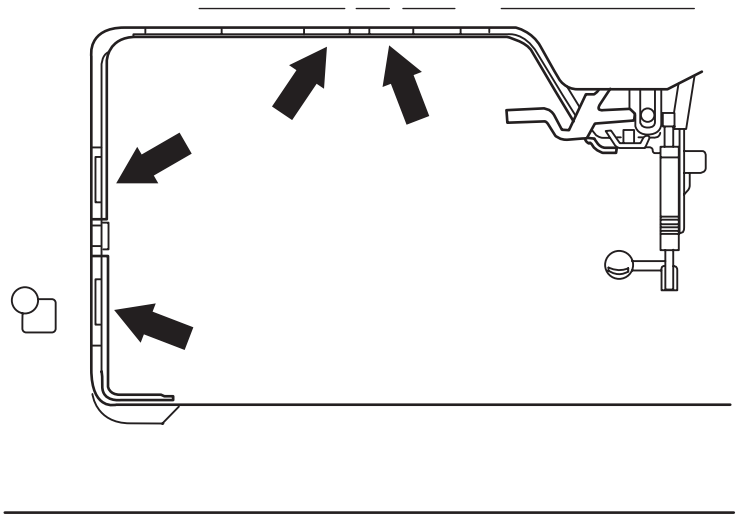

Fig. 11

- Remove the connecting plug 14 from presser bar lifter sensor (fig. 12).
- Remove the connecting plug 15 from button hole sensor.
- Remove the connecting plug 16 from ZZ stepping motor.
- Remove the connecting plug 17 from feeding stepping motor.
- Remove the connecting plug 18 from speed sensor.
- Remove the ESD cable 19.
- Remove the connecting plug 20 from the knee lifter.
- Remove the connecting plug 21 from presser bar stepping motor.
- Remove the connecting plug 22 from PC board for presser bar stepping motor.

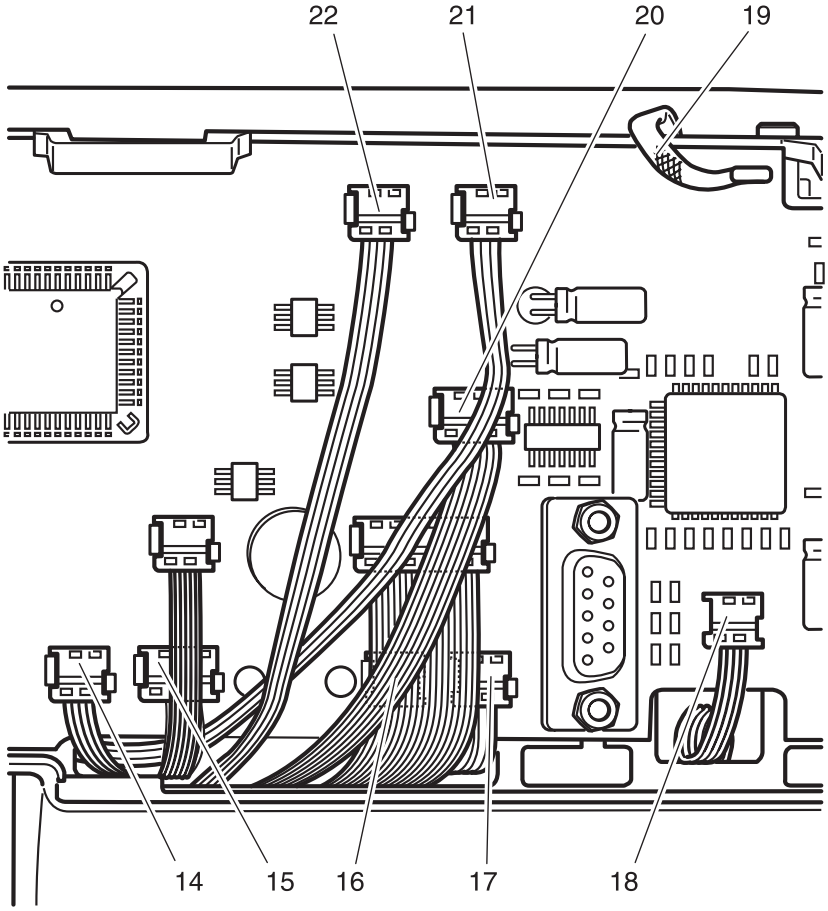

Fig. 12

- Loosen fastening screws 23, 24 and 25 (fig. 13) as well as fastening screw 26 (fig. 14).
- Remove the front housing shell carefully.

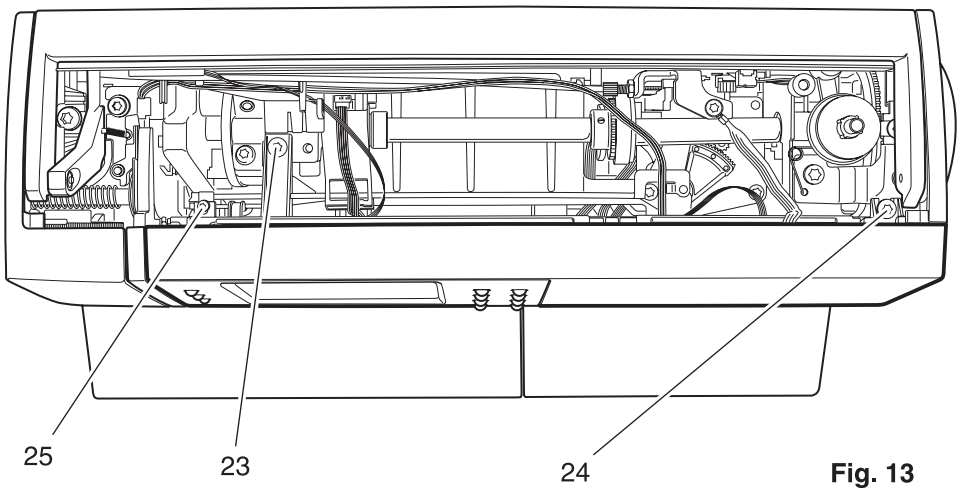

Fig. 13

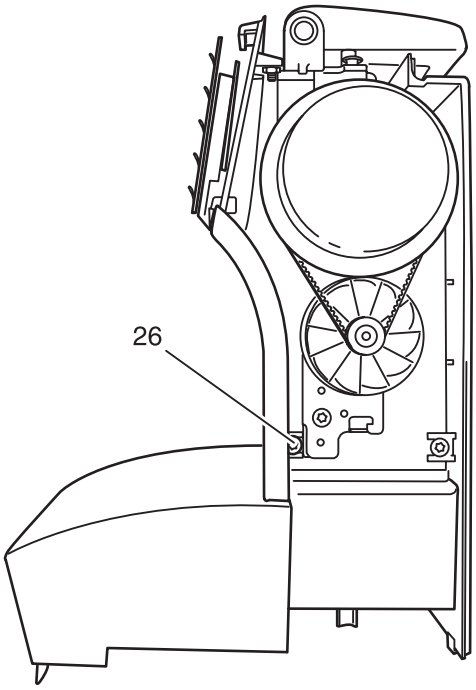

Fig. 14

Feeding system

1. Adjustment of the flat-toothed belt tension

Requirement:

The flat-toothed belt must be so taut that the sewing hook has no play in its rotating direction, but it must be possible to turn the machine easily.

Adjustment:

- Loosen screw 1 (fig. 1).
- Re-position tensioning roller 2 with a screwdriver accordingly.
- Tighten screw 1.

Check:

- Check adjustment according to „Requirement“.
- Press lightly against middle of flat-toothed belt.
- The belt must move 1 to 3 mm forwards.

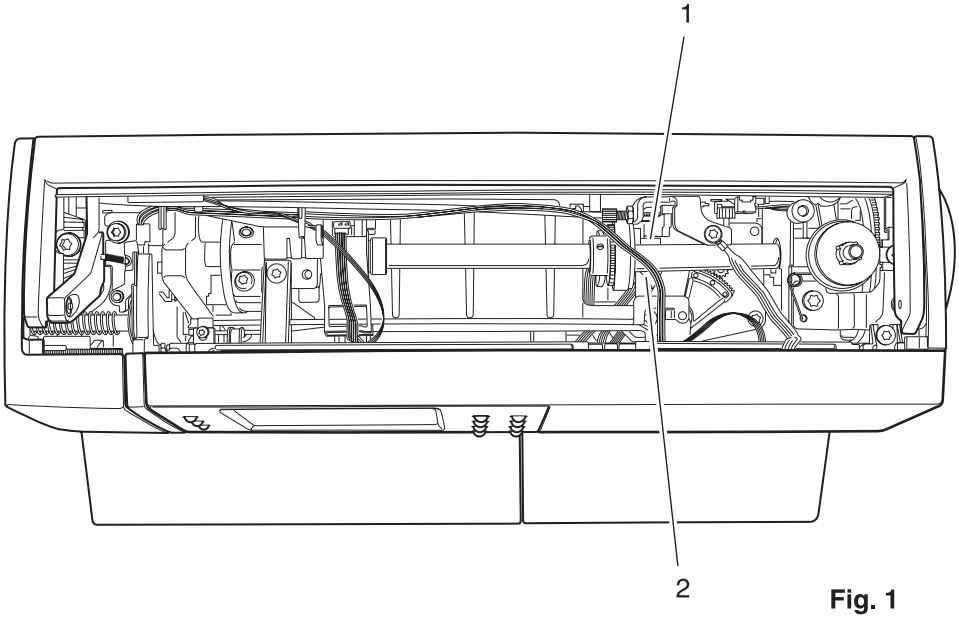

Fig. 1

2. Adjustment of feed dog in sideways direction

Requirement:

The distance of the feed dog to the right and left edges of the feed slot must be equal (fig. 2).

Check:

- Carry out a visual check of the feed dog position.

Adjustment:

- Tilt the machine toward the rear.
- Unhook spring 3 (fig. 3).
- Unscrew and remove screw 4.
- Turn the handwheel until lobe of drive eccentric 5 is positioned at the rear.
- Fold feed regulator 6 downwards and remove this and link 7 from the connecting bar rod to the left.
- Remove slide block 8 with spring to the right.
- Loosen screw 22 (fig. 4).
- Pull out pin 23 to the right.
- Unhook spring 9 (fig. 3).
- Loosen screws 10 and 11.
- Re-position the driving shaft together with the two cylindrical pins 12 and 13 sideways without play until the feed dog is positioned in the middle of the feed slot.
- Tighten screw 10.
- The pressure of the right cylindrical pin must be 1 kg.
- Tighten screw 11.
- Remove the needle plate.
- Use your finger to pull the feed dog to the front, then release it.
- The complete feed driving shaft 14 must slide slowly to the rear.
- Fit pin 23 without any play and tighten screw 22 (fig. 4).
- Move the top feed lever assembly to the front and rear.
  The complete top feed lever assembly must move easily and without binding (if necessary remove cause of binding).
- Re-position crank pin 24 with pull rod 26 sideways until the complete top and bottom feed moves easily (fig. 5).
- Tighten screw 25 and check again whether the feed system moves freely.
- Loosen screw 15 (fig. 3).
- Push slide lever shaft 16 complete with stepping motor 15 about 1 mm to the right.
- Push slide block 8 with spring onto the pin and install it in slide way 13 in the correct curve radius.
- Check whether the slide block can be moved easily, but without play or binding.
- Push slide lever shaft 16 complete with stepping motor 17 carefully to the left until there is a clearance of 0.05 mm between slide block 8 and connecting bar 19.
- Tighten screw 15 and check whether the slide block moves easily and without play.
- Push link 7 complete with feed regulator 6 to the right onto the connecting bar pin.
- Push feed regulator 6 to the rear, and then upward over feed eccentric 5.
- Position screw 4 in clamping plate 21 and tighten it a little.
- Move stud 20 sideways a little until link 7 and connecting rod 19 have a slight play and move easily.
- Tighten screw 4.
- Attach the two springs 3 and 9.

Cross-check:

- The feed dog must be in the exact center of the feed slot.

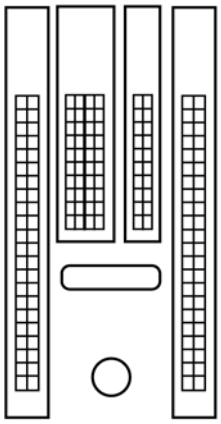

Fig. 2

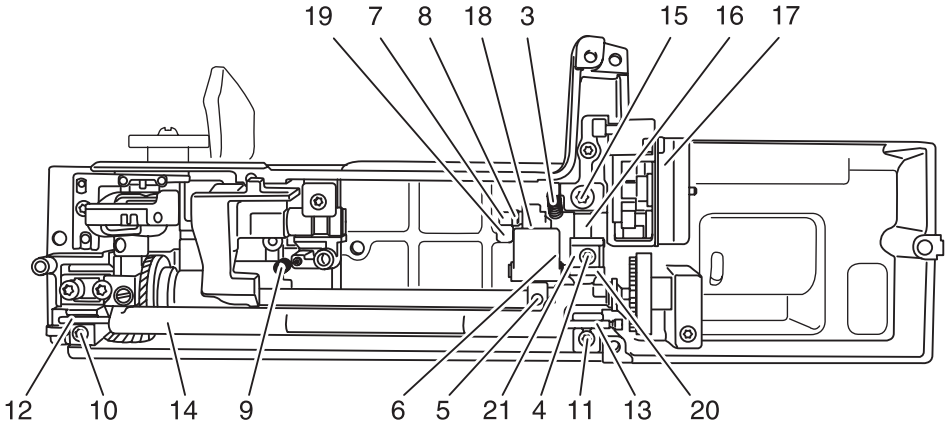

Fig. 3

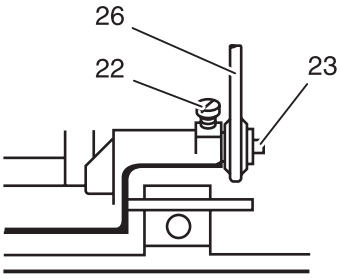

Fig. 4

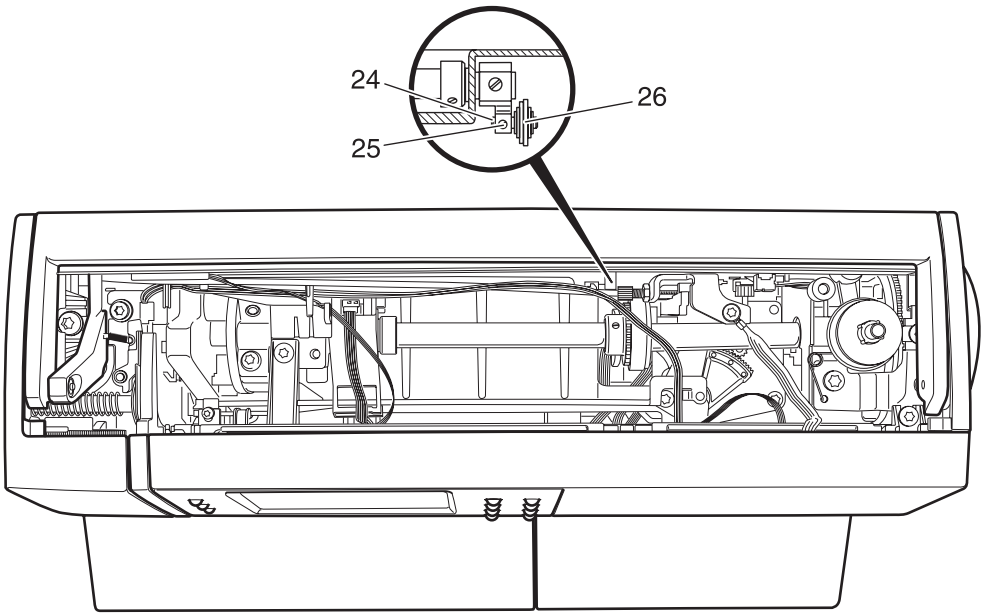

Fig. 5

3. Timing of feed motion

Operating sequence:

When the rising needle has left the fabric, the feed dog moves up above the needle plate.
The risen feed dog pushes the fabric to the rear. Shortly before the end of the feeding motion, the take-up lever is in its highest position (t.d.c).
At a stitch length setting of 6 mm the feed dog now pushes 0.7 mm more to the rear (after-feed movement).
After completing the feeding movement, the feed dog moves down under the needle plate surface and the needle enters the fabric.
Underneath the needle plate the feed dog moves back to its basic position.
Whenever the stepping motor changes the sewing direction from forward to reverse sewing, the feed dog must be positioned 0.3 - 0.35 mm below the needle plate surface on its way downward.

Requirement:

When the needle bar has moved 2 mm up from its lowest position (b.d.c), it must be possible to insert the two pins of pin gauge 63-114 690-09 simultaneously in the holes of the feeding eccentric and the stud (fig. 6).

Check:

- Remove the needle.
- Turn the handwheel to set the needle bar at its lowest position.
- Set the spacer (63-102 600-18/000) onto the needle bar and push it up against the needle bar frame.
- Push the needle-rise clamp (61-111600-35/000) on the needle bar and tighten it lightly.
- Push the 2 mm feeler gauge (61-111600-02/000) with its cutout on the needle bar above the needle-rise clamp.
- Loosen the needle-rise clamp and push the 2 mm feeler gauge up against the spacer.
- Tighten the milled screw of the needle-rise clamp (fig. 7).
- Turn the handwheel to and fro a little.
- If there is play at the feeler gauge, repeat this procedure.
- Remove the 2 mm feeler gauge.
- Turn the handwheel in sewing direction until the needle-rise clamp is up against the spacer (fig. 8).
- Tilt the machine over backwards.
- Hold the handwheel in this position while at the same time inserting the pin gauge in the holes of feeding eccentric 5 and stud 27 (fig. 6).

Adjustment:

- If the adjustment is not correct, remove the needle-rise clamp.
- Loosen the three screws 29 in the lower flat-toothed-belt sprocket.
- Re-fit the needle-rise clamp and repeat the procedure as described in „Check“ until the needle bar has moved upwards by 2 mm and the clamp is in contact with the spacer (fig. 8).
- Turn the long drive shaft 28 in sewing direction until it is possible to insert the pin gauge in both holes (fig. 6).
- Insert the pin gauge and tighten one of the screws 29.

Cross-check:

- Remove the pin gauge.
- Tighten all three screws 29 very firmly.
- Check again with the needle-rise gauge and the pin gauge as described under „Check“.

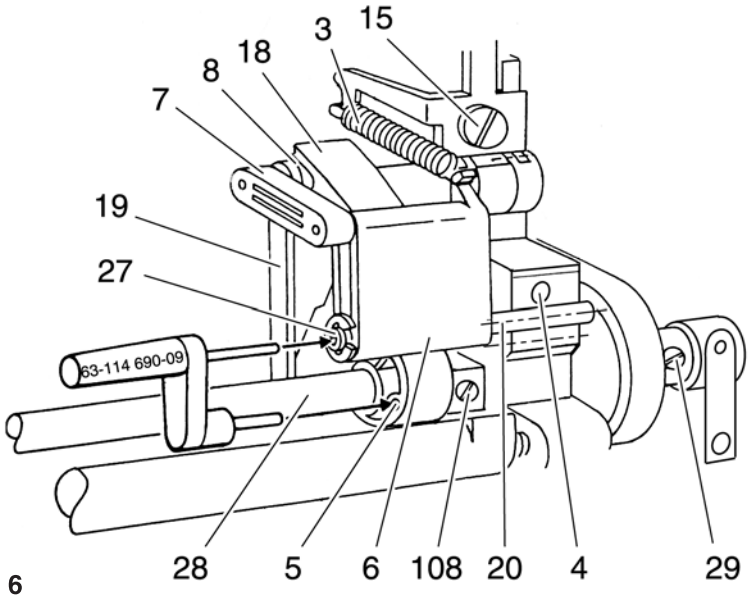

Fig. 6

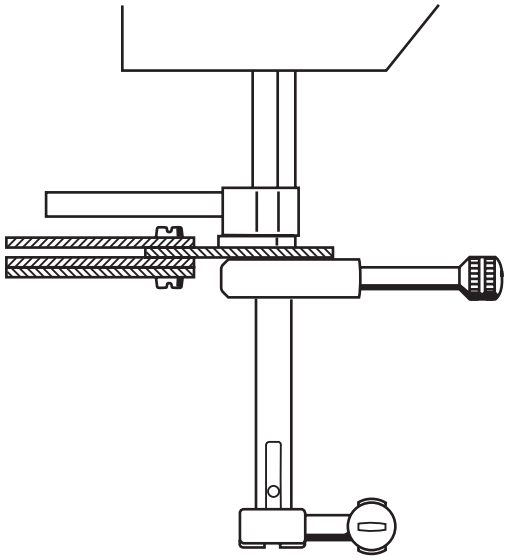

Fig. 7

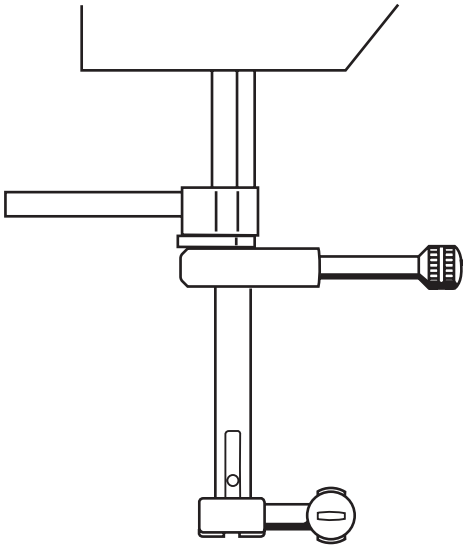

Fig. 8

4. Adjustment of feed dog height

Requirement:

In the highest position of the feed dog, the points of its teeth must protrude above the needle plate surface by 0.85 - 0.9 mm. The tolerance must not remain under or exceed 0.85 to 0.9 mm (fig. 9).

Check:

- Remove the needle.
- Remove the presser foot.
- Switch on the master switch.
- Set stitch pattern „1“ and stitch length „6.0“.
- Place adjustment gauge (63-114 690-23/000) on the needle plate so that feeler lever 30 rests on the needle plate to the right of the cutout (fig. 10).
- Turn the hexagon with a 6 mm spanner (wrench) slightly until pointer 31 is exactly at „0“.
- Move the gauge to the left to set feeler lever 30 on the feed dog (fig. 11).
- Turn the handwheel until pointer 31 has moved up to its highest position. The pointer must now point exactly at mark 0.9.

Adjustment:

- Leave the adjustment gauge on the needle plate.
- Remove baseplate and bobbin thread monitor, but leave all electrical connections in place.
- Turn the handwheel until the feed dog is in its highest working position.
- Loosen screw 32 by just 1/8 of a turn (fig. 12).
- Turn eccentric stud 33 until the eccentric is facing the rear part of the housing (basic position).
- Turn eccentric stud 33 counter-clockwise until pointer 31 is exactly at mark 0.9 (fig. 11).
- Tighten screw 32 (fig. 12).

Cross-check:

- Turn the handwheel until pointer 31 is in its highest position again.
  The pointer must now be at mark 0.9. (fig. 11).
- Lower the feed dog and check the function.

Fig. 9

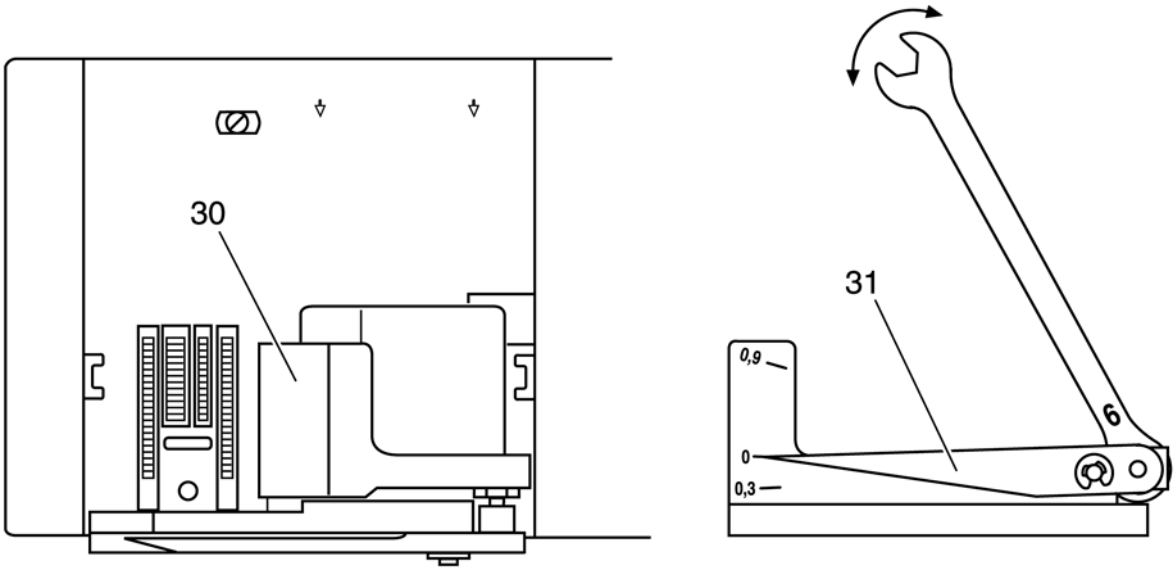

Fig. 10

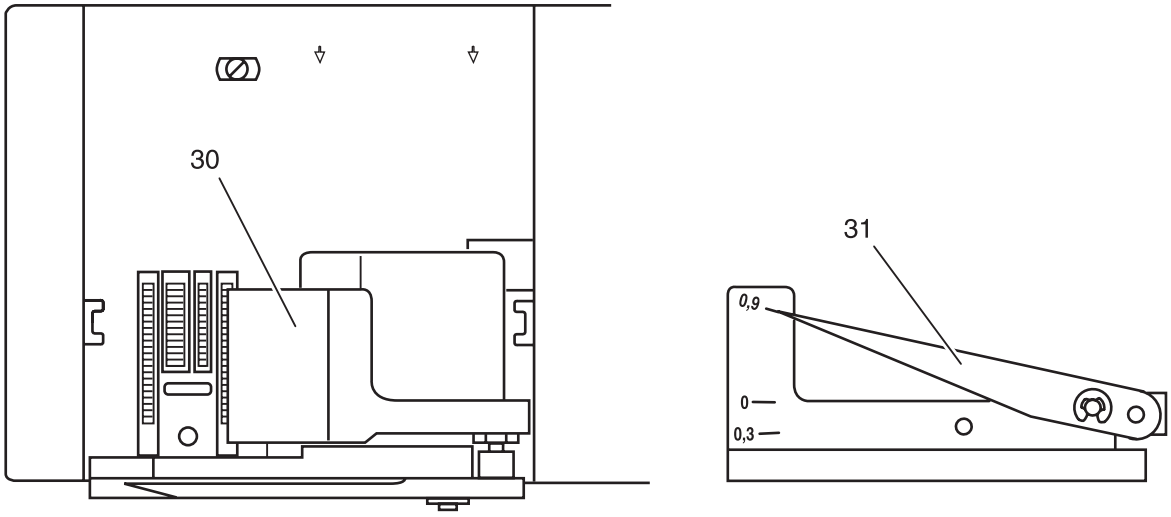

Fig. 11

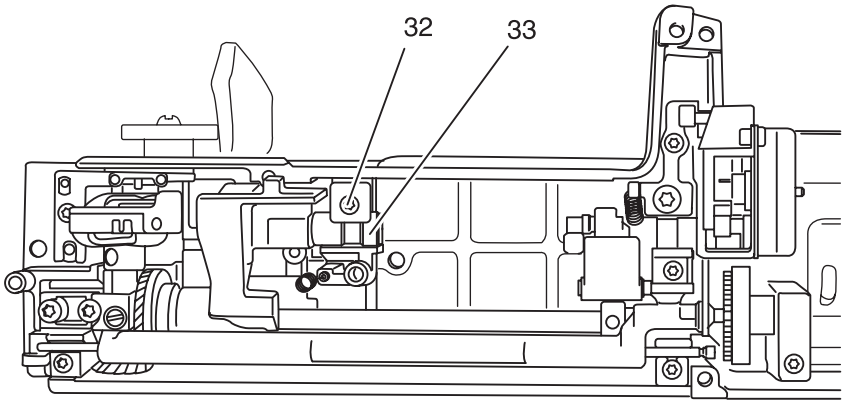

Fig. 12

5. Adjustment of synchronizer

Note:

The following machine positions or functions are controlled by the synchronizer:

1. Change of feeding direction and change of stitch length
2. Sideways movement of needle bar
3. Take-up lever top position/needle „up“ position
4. Needle „down“ position

This adjustment must only be carried out when compelling reasons exist!
It must be performed with absolute accuracy.

Requirement:

A change of sideways needle bar movement must take place when the needle in its upward movement is 7 mm above the needle plate surface (fig. 13).
When the machine stops with the take-up lever in top position, the take-up lever must have nearly reached the upper dead center.

Check:

- Insert a new needle.
- Remove the presser foot.
- Turn on the master switch.
- Select stitch pattern „3“ with stitch width „9“ and stitch length „2“.
- Turn the handwheel forward by one full turn.
- Continue turning the handwheel slowly and check the timing of the needle bar sideways movement.

Adjustment:

- Remove the folding cover and the housing insert.
- Loosen fastening screw 34 of cam 35 just slightly (fig. 14).
- Turn the handwheel a full rotation forwards, then keep on turning it until the needle is about 7 mm above the needle plate surface (fig. 15).
- Keep on turning cam 35 very slowly until the zigzag stepping motor switches (fig. 14).
- Tighten fastening screw of cam 34.
- Make sure that the lobes of cam 36 rest in the center of the circuit board guides.

Cross-Check:

- Turn the handwheel slowly and check the timing of the needle bar sideways movement.
- A change of feed direction or stitch length must take place when the feed dog has sunk 0.3+/-0.02 mm below the needle plate surface.

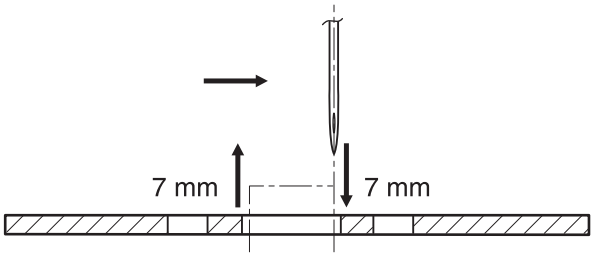

Fig. 13

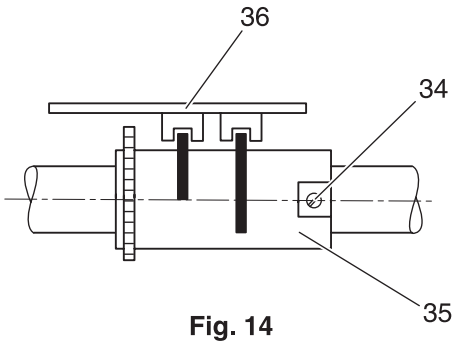

Fig. 14

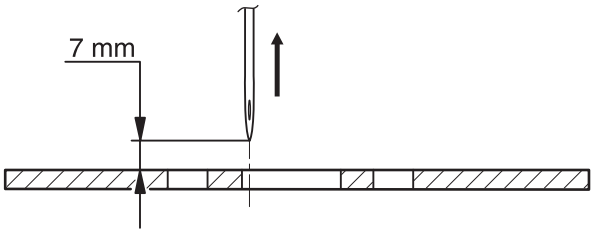

Fig. 15

6. Adjustment of presser foot height

Requirement:

With the presser bar lifter raised there must be a clearance of 8 mm between the needle plate and the sole of the zigzag foot.

Check:

- Raise the presser bar lifter.
- Fit the zigzag foot.
- Lower the feed dog.
- Fully raise the presser bar lifter and hold it in this position.
- Insert the presser foot gauge (63-114 690-39/000) from behind under the zigzag foot and into the cutout of the needle plate (fig. 16).
- Lower the presser bar lifter to its normal position again.
  The zigzag foot must rest parallel and without play on the presser foot gauge.
  However the presser foot gauge must not lift the zigzag foot.
  The needle thread tension release lever 41 must be without play (fig. 17).

Adjustment:

- Loosen the three screws 37, 38 and 39.
- Turn the zigzag foot with the presser bar lifter raised until it is parallel with the sides of the presser foot gauge.
- Use a screwdriver to press presser bar guide 40 firmly down.
- At the same time firmly tighten screw 38.

Cross-check:

- Press the presser bar lifter further upward and release it again.
  The zigzag foot must rest parallel and without play on the presser foot gauge.
  Needle thread tension release lever 41 must be without play.
  The presser bar lifter must be in its raised position.

Note:

The two screws 37 and 39 are not tightened until later when the top feed height is adjusted.

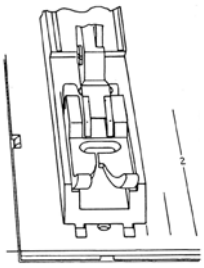

Fig. 16

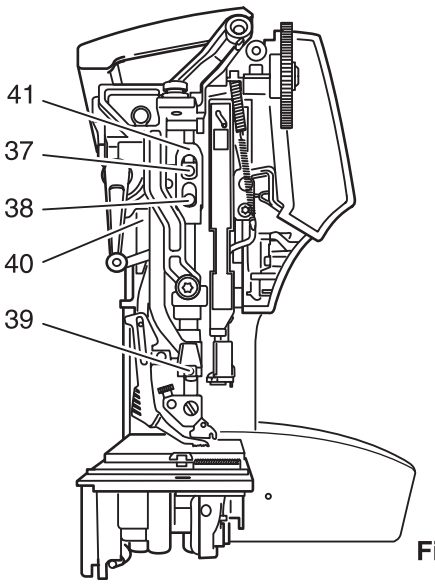

Fig. 17

7. Adjustment of top feed foot in sewing direction

Requirement:

The front edge of the top feed foot must be between the first and second tooth point of the center tooth row of the feed dog (fig. 18).

Check:

- Raise the presser bar lifter.
- Remove the complete presser foot.
- Set the stitch length to „6“.
- Engage the top feed foot.
- Turn the handwheel until the rising feed dog is flush with the needle plate surface.
- Lower the presser bar lifter.
- Carry out a visual check.

Adjustment:

- Loosen screw 42 (fig. 19).
- Raise the presser bar lifter until the top feed foot is just resting on top of the feed dog.
- At the same time push the top feed dog to the front or to the rear until its front edge is between the first and second tooth point of the center tooth row.
- Lower the presser bar lifter.
- Tighten screw 42, making sure that driving shaft 43 has no play.

Cross-check:

- Check as described under „Check“.

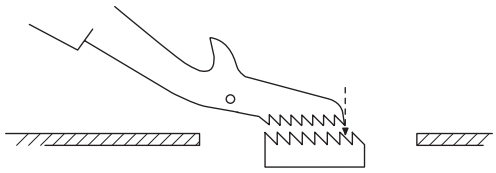

Fig. 18

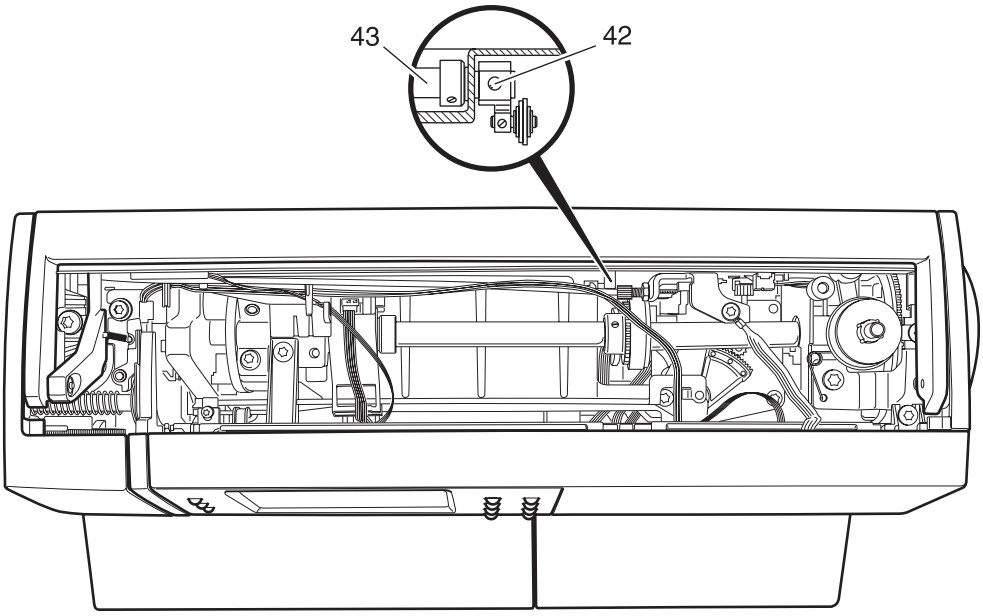

Fig. 19

8. Adjustment of top feed height

Requirement:

In its highest working position the top feed foot must be 2 mm higher than the lower edge of the zigzag foot sole.

Note:
This adjustment must only be carried out when the height of the presser bar is set correctly.

Check:

- Raise the presser bar lifter.
- Insert the zigzag foot sole.
- Engage the top feed.
- Turn the handwheel until the needle bar is in its lowest position.
  Caution: The handwheel must now no longer be turned!
- Lower the feed dog.
- Fully raise the presser bar lifter and hold it in this position.
- At the same time insert the presser foot gauge (63-114 690-39) from behind under the zigzag foot and into the cutouts of the needle plate.
- Lower the presser bar to its normal raised position.
- Press the top feed lightly downward.
- Check that the top feed foot rests only lightly on the presser foot gauge and has no play.

Adjustment:

- Loosen screws 37 and 39 (fig. 20).
- Push counter bearing 44 lightly downward until the top feed foot rests lightly on the presser foot gauge.
- Tighten screw 37 in this position.

Cross-check:

- Check for light resting and freedom of play of the top feed foot on the presser foot gauge as described under „Check“.

Adjusting the guide piece

- Fully raise the presser bar lifter and hold it in this position.
- Remove the presser foot gauge.
- Lower the presser bar lifter to its raised position.
- Turn the handwheel until needle bar 45 is in its top position.
- Set guide piece 46 at a clearance of 0.2 mm from cross head 47 (fig. 21).
- Tighten screw 39 (fig. 20).

Cross-check:

- Turn the handwheel and check for clearance of 0.2 mm.

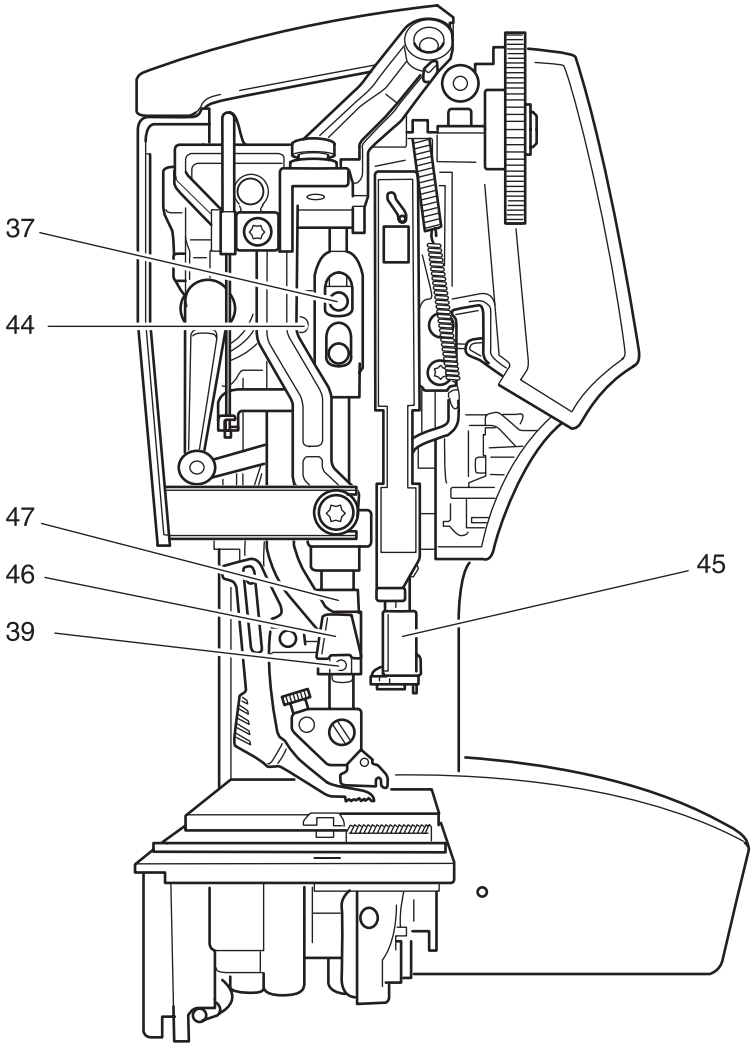

Fig. 20

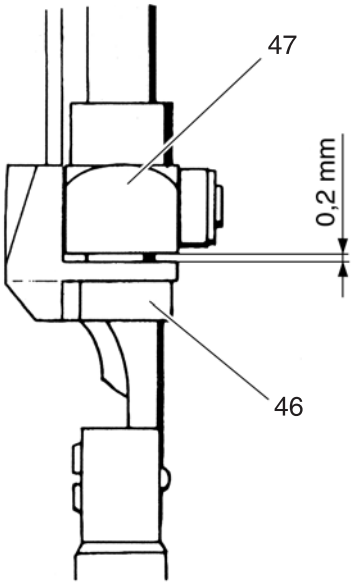

Fig. 21

9. Adjustment of the height of the free motion foot

Note:

This adjustment can only be carried out when the machine is completely assembled.

Requirement:

When in free motion position, the standard presser foot must have a clearance of 5.0 mm to the needle plate surface (fig. 22).

Check:

- Plug the machine's mains plug into the mains.
- Switch on the machine.
- Press the „main menu“ key.
- Press the icon for utility stitches.
- Select the straight stitch.
- Press the „More opions“ key.
- Press the icon „free motion“ sewing.
- Confirm the input with the „OK“ key.
- Press and release the foot control.
- The presser foot must now be 5.0 mm above the needle plate surface.

Adjustment:

- Remove the folding cover and the housing insert as described in the manual.
- Loosen counter nut 48 with a 7 mm fork wrench (fig. 23).
- Turn threaded bolt 49 on the Bowden cable until the correct height is adjusted.
- Tighten counter nut 48.

Test:

- As described under „Check“

Note:

When in „sewing“ position the standard presser foot must rest on the needle plate surface without play when the feed dog is lowered.

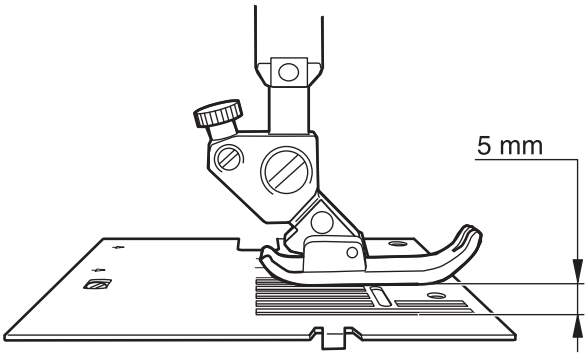

Fig. 22

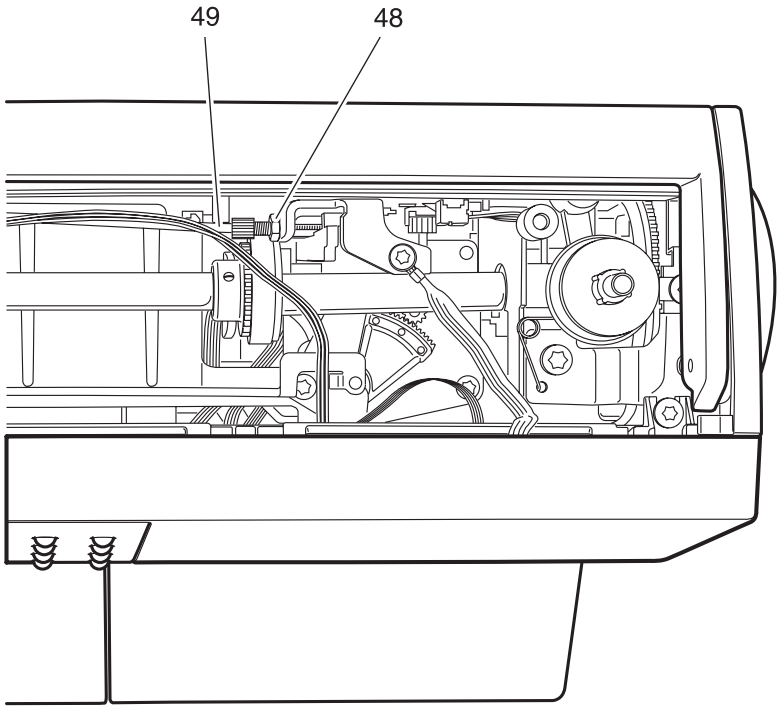

Fig. 23

Zigzag mechanism

10. Adjustment of needle in needle hole

Requirement:

At the straight stitch setting, the needle must be in the center of the needle hole (fig. 24).
The widest zigzag stitches must have the same distance from the left and right needle hole edges (fig. 25).

Check:

- Remove the presser foot.
- Insert a new needle.
- Select stitch pattern „01“ for straight stitch.
- Turn the handwheel until the needle is in the needle hole.
- Carry out a visual check (fig. 24).
- Select stitch program „03“ and a zigzag width of 6 mm.
- Turn the handwheel and check the left and right distance (fig. 25).

Adjustment:

- Select stitch pattern „01“ for straight stitch.
- Loosen both screws 50 just a little (fig. 26).
- Push the complete stepping motor 51 to the left or to the right until the needle is centered (fig. 24).
- Tighten both screws 50 (fig. 26).

Cross-check:

- Carry out as described under „Check“.

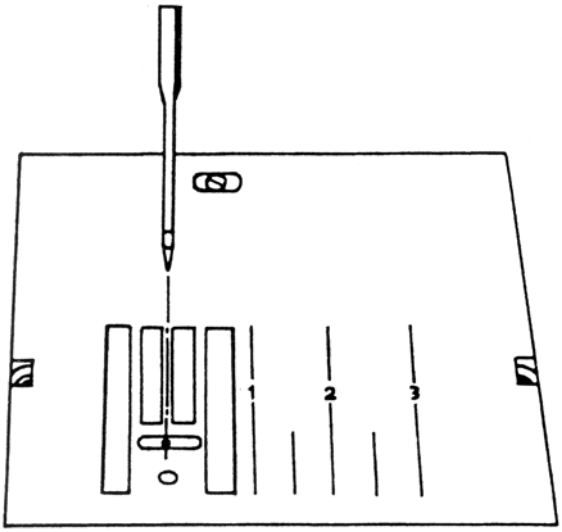

Fig. 24

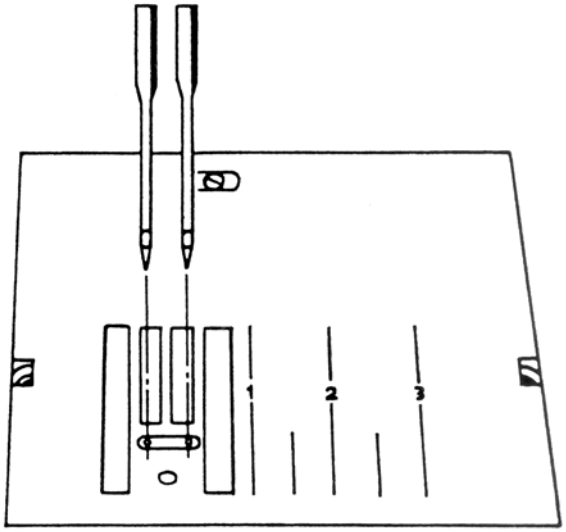

Fig. 25

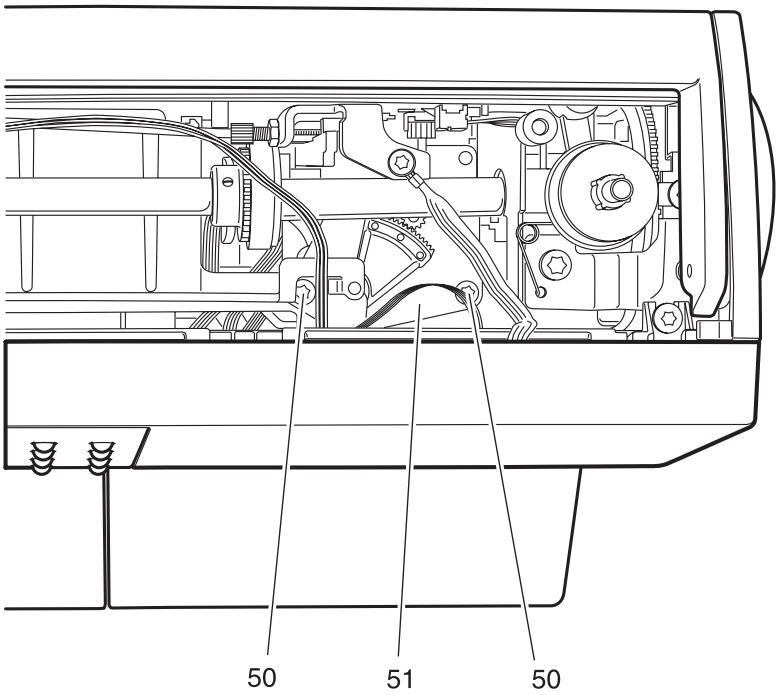

Fig. 26

Stitch forming parts (Hook)

Foreword:

The sewing hook adjustment consists basically of the three following adjustments:

Needle rise
Needle bar height
Hook-to-needle clearance

Needle rise:

The needle rise is the movement by which the needle must rise from its lowest position until a thread loop has formed on the side of the needle on which the scarf is located.
When the machine moves further, the looper point must enter the thread loop, widen it and guide it around the bobbin.

Needle bar height:

The needle bar height must be set in such a way that the sewing hook point can easily enter the thread loop above the needle eye at straight stitch and zigzag stitch settings.

Hook-to-needle clearance:

The distance of the sewing hook point from the needle must be as small as possible, so that the sewing hook point does not miss the thread loop.

The sequence of sewing hook adjustments is as follows:

1. Hook-to-needle clearance
2. Bevel gear setting
3. Needle rise
4. Needle bar height

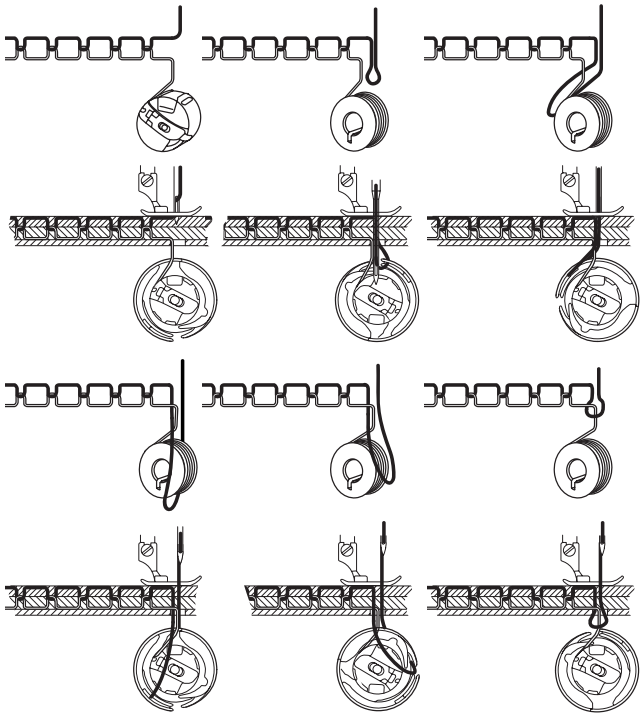

11. Position of needle in needle hole in sewing direction

Requirement:

There must be a clearance of 0.2 mm between the back edge of the needle shank and the back edge of the needle hole in the needle plate (fig. 27).

Note:

Since system 130/705 H needles increase in size at the needle front side only, the point of an Nm 100 needle is positioned exactly in the middle of the needle hole (as seen in feeding direction), while the point of an Nm 80 needle is positioned slightly closer to the back edge of the hole.

Check:

- Insert a new needle of system 130/705 H in size Nm 100.
- Select stitch pattern „01“ for straight stitch.
- Attach zigzag foot.
- Lower zigzag foot.
- Turn the handwheel until the needle is in its lowest position.
  The needle must now have the same distance to the front and rear edges of the needle hole in the foot and the needle plate.

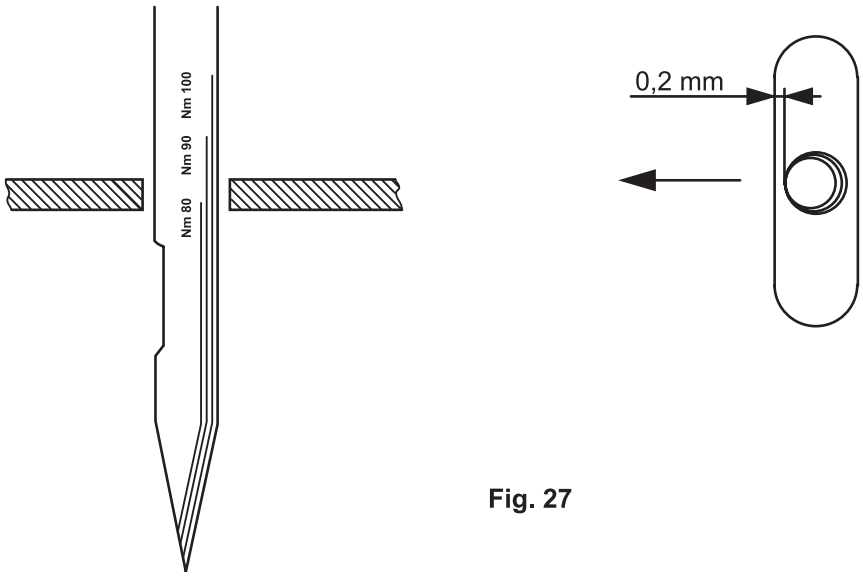

Fig. 27

Adjustment in relation to the presser foot:

- Loosen screw 52 (fig. 28).
- Move pin 53 together with collar and needle frame 54 to the front or the rear until the needle is exactly in the middle of the needle hole on the presser foot.
- Tighten screw 52.

Check:

- Turn the handwheel and bring the needle to its highest position.
- Place a piece of paper underneath the presser foot and lower the foot.
- Turn the handwheel and bring the needle to its lowest position.
- Its distance from the front and rear edges of the needle hole in the foot must be equal.
- Loosen the torx screw on the face plate.
- Remove the face plate.
- Remove Benzing circlip 54 on the needle bar frame (fig. 29).
- Disengage the connecting rod and the needle bar frame.
- Move the needle bar frame to the left and to the right.
  Important:
  The needle bar frame must move easily and without binding.
  If this is not the case, any binding must be removed.
- Re-engage the needle bar frame with the connecting rod.
- Mount Benzing circlip 54.

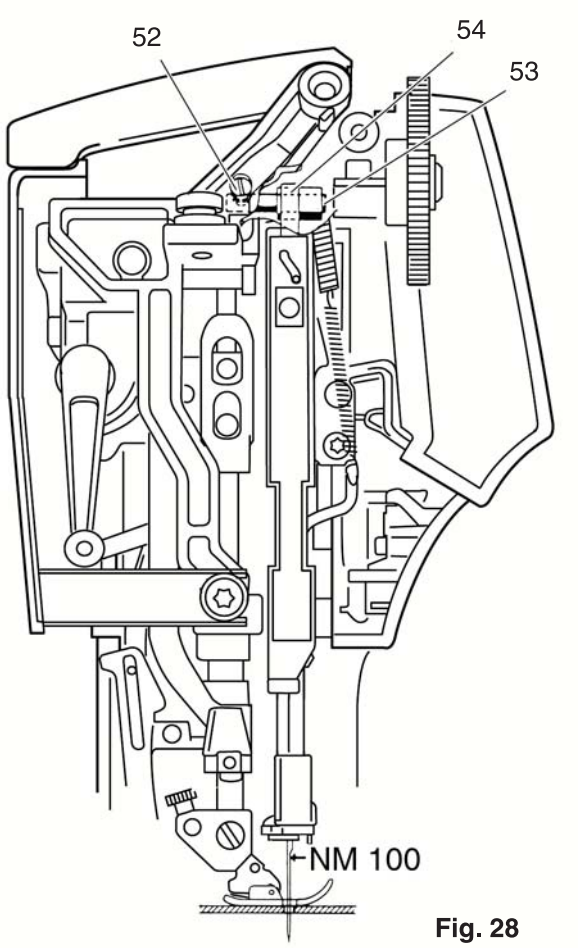

Fig. 28

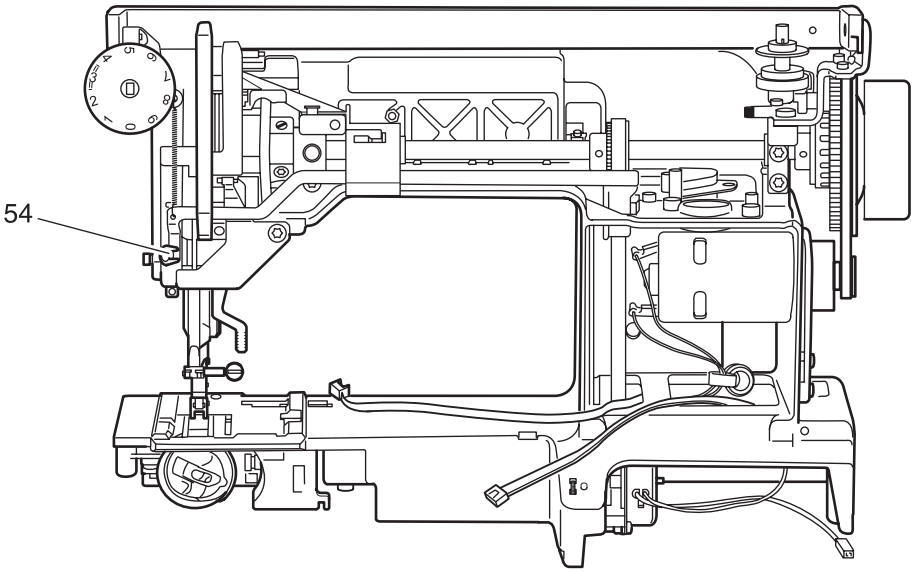

Fig. 29

Adjusting the needle plate:

- Turn the handwheel and bring the needle to its highest position.
- Remove the zigzag foot.
- Turn the handwheel and bring the needle to its lowest position.
- Turn adjustment eccentric 55 until the distance from the front and rear edges of the needle hole is equal (fig. 30).

Cross-check:

- Carry out a visual check at straight stitch and zigzag stitch settings.

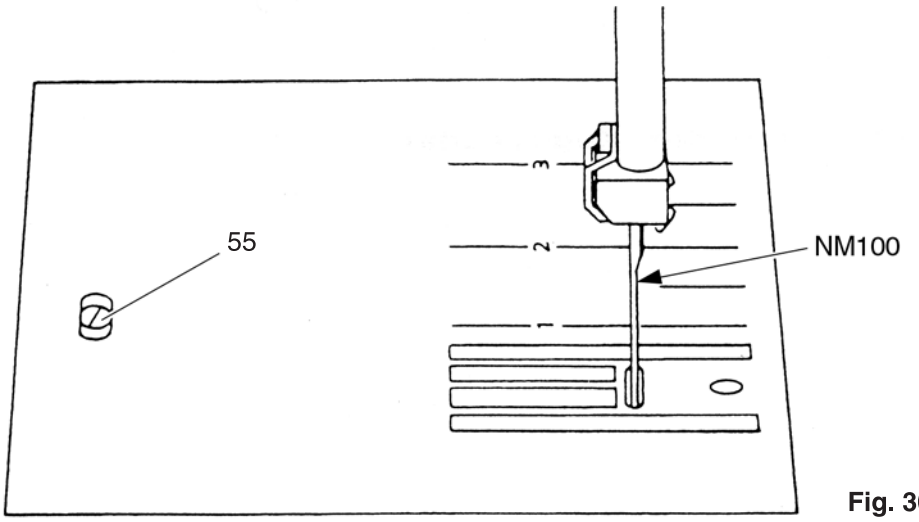

Fig. 30

12. Adjustment of hook-to-needle clearance

Requirement:

At the straight stitch setting the distance of the sewing hook point from the bottom of the scarf in the needle must be 0.05 mm (fig. 31).
In the widest zigzag stitch, the sewing hook point must almost touch the needle.

Check:

- Remove the baseplate and the free-arm lid.
- Remove the needle.
- Remove the presser foot.
- Remove the bobbin case.
- Remove the bobbin case position finger.
- Move the bobbin case base so that the hook point is exposed.
- Insert a new needle system 130/705 H size Nm 80.
- Select straight stitch program „01“.
- Turn the handwheel until the hook point is opposite the center line of the needle.
- Check the distance between hook point and needle scarf.
- Check the axial play of hook 56 to hook shaft bush 57 (fig. 32).

Adjustment:

- If the hook shaft has axial play, loosen the two screws 58.
- Press bevel gear 59 with the shaft to the front and push sewing hook 56 to the rear.
- Tighten the two screws 58.
- Loosen screw 60 in the lifting eccentric by 2 - 3 turns.
- Loosen screw 61 slightly.
- Turn the handwheel and the sewing hook until the hook point is opposite the middle of the needle scarf.
- Shift the sewing hook complete with hook shaft bush 57 until the distance of the sewing hook point to the bottom of the scarf in the needle is 0.05 mm.
- Tighten screw 61 on the narrow flat of the hook bush.

Note:

The large flat of the hook shaft bush must face the right.

Cross-check:

- Check for free movement of the hook shaft.
- Check again the distance between the sewing hook point and the bottom of the needle scarf.

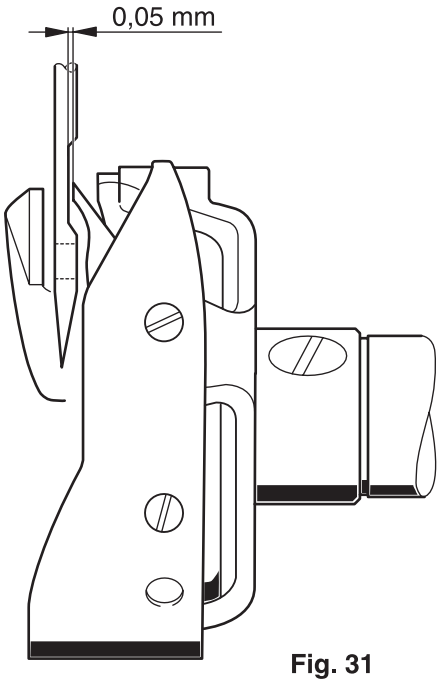

Fig. 31

13. Adjustment of bevel gears

Requirement:

The bevel gears must move freely and without play.

Adjustment:

- Push the bevel gear with the lifting eccentric to the left until it is in contact with bevel gear 59 and has no play (fig. 32).
- Tighten screw 60 on the surface of the drive shaft.

Check:
- As described under „Requirement“.

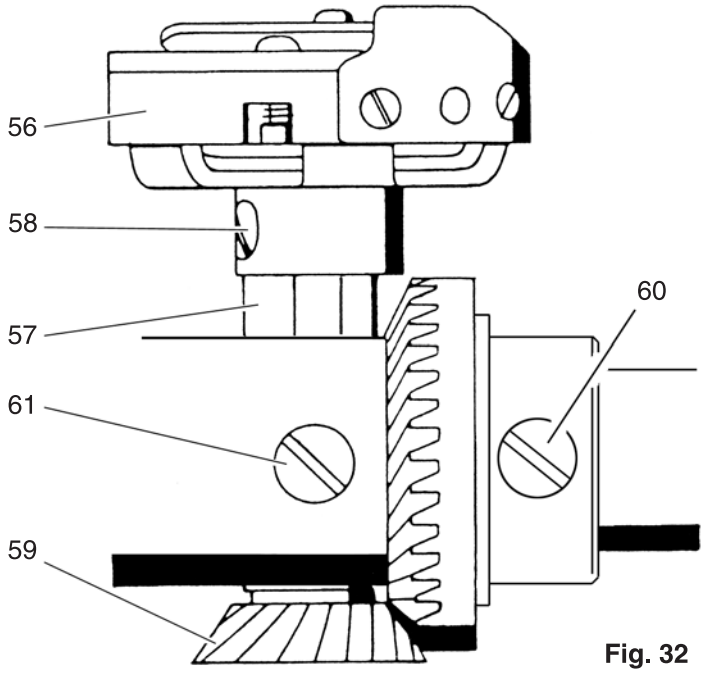

Fig. 32

14. Sewing hook timing

Requirement:

When the needle bar has moved 2.2 mm upwards from its lowest position (with the machine set for straight stitch and center needle position), the sewing hook point must be exactly opposite the center line of the needle (fig. 33).

Check:

- Remove the presser foot and the needle plate.
- Select stitch pattern „01“ for straight stitch.
- Bring the needle bar to its lowest position by turning the handwheel (fig. 34).
- Set the spacer (63-102 600-18/000) on top of the needle bar and push it upwards against the needle bar frame.
- Push the needle-rise clamp (61-111 600-35/000) on the needle bar and tighten it lightly.
- Push the 2.2 mm feeler gauge (61-111600-02/000) with its cutout on the needle bar above the needle-rise clamp.
- Loosen the needle-rise clamp and push the 2.2 mm feeler gauge upwards against the spacer.
- Tighten the milled screw on the needle-rise clamp.
- Turn the handwheel back and forth a little.
- If there is any play on the feeler gauge, repeat this procedure.
- Remove the 2.2 mm feeler gauge.
- Turn the handwheel in sewing direction until the needle-rise clamp is in contact with the spacer (fig. 33).
  By this means the needle has moved upwards to the needle rise position of 2.2 mm.
  The hook point must now be exactly behind the center line of the needle.

Adjustment:

- If the setting is not correct, remove the needle-rise clamp.
- Loosen the two screws 58 (fig. 35).
- Re-fit the needle-rise clamp and repeat the operation as described under „Check“, until the needle bar has moved 2.2 mm upwards and the needle-rise clamp is in contact with the spacer.
- Turn the hook until the hook point is exactly behind the center line of the needle.
- Press sewing hook 56 and bevel gear 59 together so that there is no play between them, and tighten one of screws 58.

Cross-check:

- Turn the handwheel a little backwards and then forwards until the needle-rise clamp rests on the spacer (fig. 33).
- The hook point must be exactly behind the center line of the needle.
- Remove the needle-rise clamp.
- Check that the hook shaft has no axial play.
- Tighten the two screws 58 very firmly.

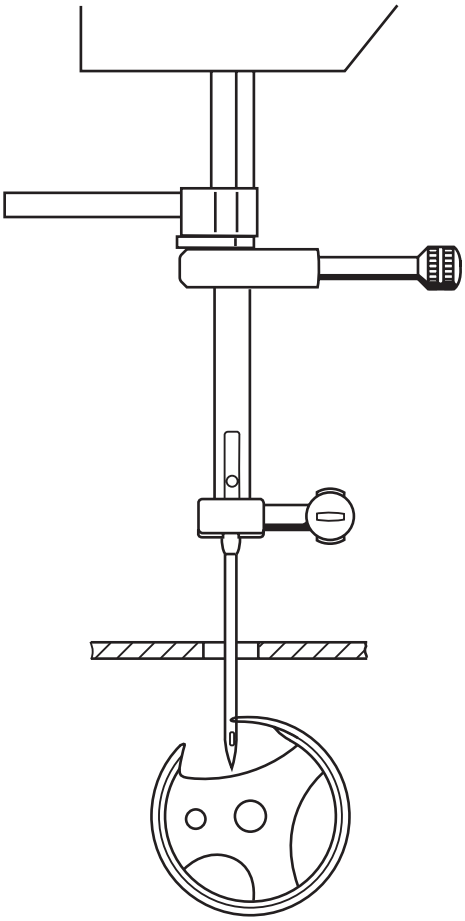

Fig. 33

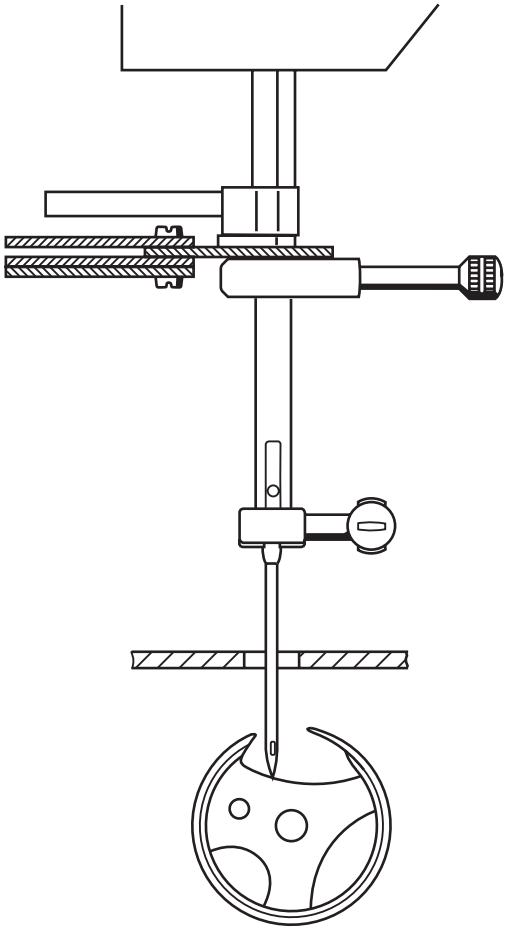

Fig. 34

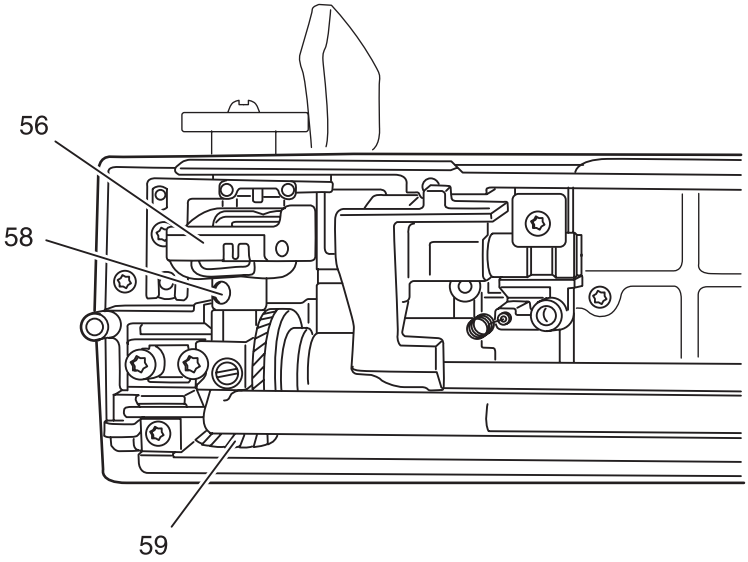

Fig. 35

15. Adjustment of needle bar height

This machine has a transverse double-rotating hook.
On the right zigzag penetration, the sewing hook reaches the needle a little earlier and at the left penetration a little later than at the center penetration.
Thus the looper point is positioned slightly higher above the needle-eye for the right zigzag penetration than for the left zigzag penetration (fig. 36).

Requirement:

The distance between the top edge of the needle eye and the lower edge of the sewing hook point must be 0.5 mm at the widest left zigzag penetration (fig. 37).

Check:

- Select stitch program „03“ and the widest zigzag width of 9 mm.
- Turn the handwheel until the needle rises at the left zigzag stitch and the sewing hook point is exactly behind the center line of the needle.
- The distance between the top edge of the needle eye and the bottom edge of the hook point must be 0.5 mm.

Adjustment:

- Loosen screw 62 just a little (fig. 38).
- Shift needle bar 63 in height, without twisting it, until the clearance of 0.5 mm is set.
- Tighten screw 62 securely.

Cross-check:

- Check the clearance of 0.5 mm.
  The needle holder must face exactly square to the right.

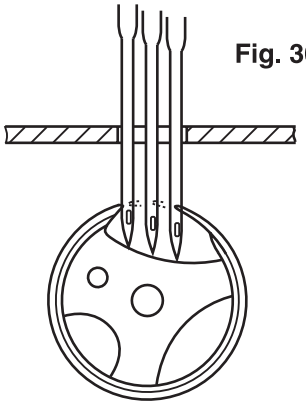

Fig. 36

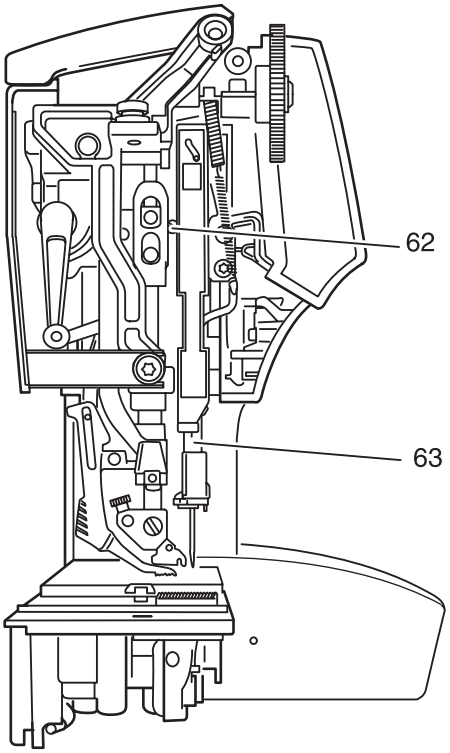

Fig. 38

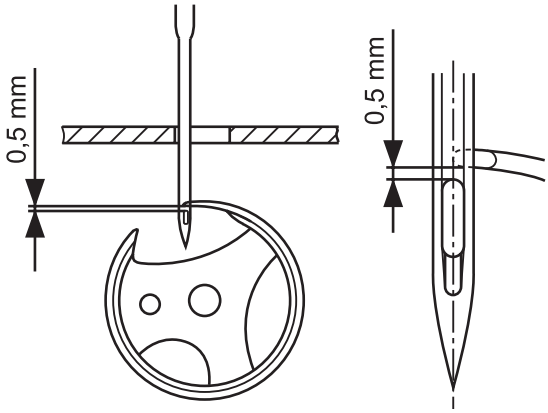

Fig. 37

16. Adjustment of bobbin case position finger

Requirement:

The clearance between the position finger and the bottom of the groove in the bobbin case base must be 0.7 mm (fig. 39).

Check:

- It must be possible to insert the clearance gauge (61-111 621-15/000) with ease but without play between the position finger and the bottom of the groove in the bobbin case base.

Adjustment:

- Loosen screw 64.
- Insert the clearance gauge.
- Press position finger bracket 65 against the clearance gauge at an angle of 90 degrees.
- Tighten screw 64.

Cross-check:

- As described under „Check“.

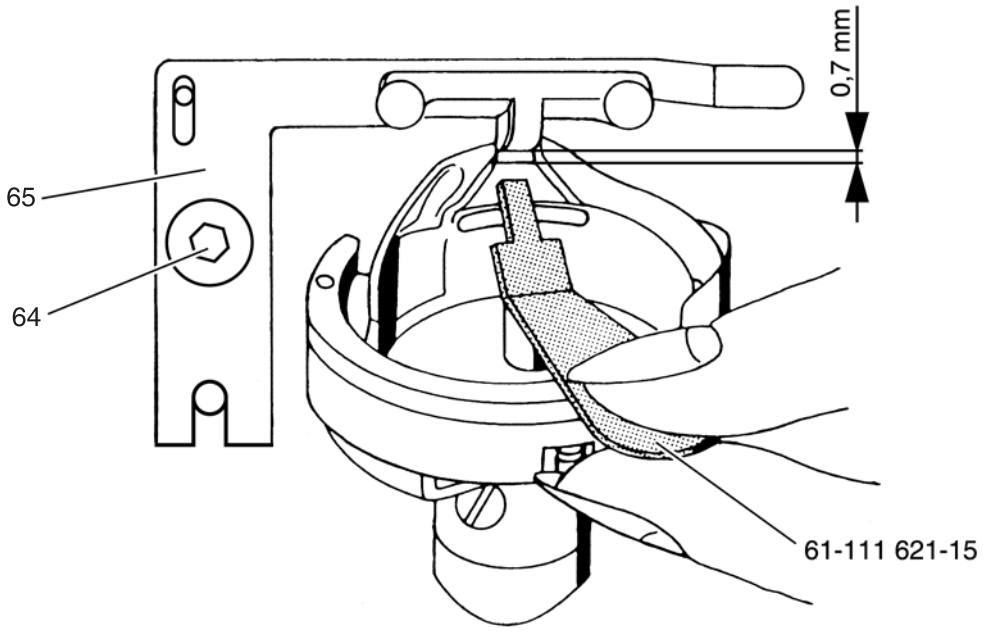

Fig. 39

Stitching off

17. Adjustment of needle threader

Requirement:

With the threader key pushed fully down, prong 66 must pass through in the center between the top and bottom edge of the needle eye of a needle size Nm 70 (fig. 40).

Check:

- Insert a new needle system 130/705 H, size Nm 70.
- Switch on the machine (stitch program 01).
- Set the machine at top needle position by briefly pressing the foot control.
- Push threader key 67 fully down (Fig. 41 and 42).
- Carry out a visual and functional test.

Height adjustment:

- Loosen the screw on the face cover and remove face cover.
- Press threader key 67 fully down and hold it in this position (fig. 41).
- Loosen allen screw 68 by only a 1/4 of a turn.
- Push the complete threader bar frame 69 either upwards or downwards until prong 66 has the same clearance to the top and bottom edge of the needle eye (fig. 40).
- Tighten allen screw 68 in this position (fig. 41).

Cross-check 1:

- Using threader key 67, move the needle threader up and down.
  Whilst doing so, carry out a visual check of the prong height.
- When the threader key is pushed down, pin 70 must pass completely through the diagonal guide slot and rest on the upper end.

Lateral adjustment:

- Using threader key 67, place threader prong 66 at the front in the needle eye.
- Loosen screw 71 by only 1/8 of a turn (fig. 42).
- Push the threader bar frame either to the left or right until the prong is in the exact middle of the needle eye.
- Tighten screw 71.

Cross-check 2:

- Activate threader key 67 (fig. 41).
  Whilst doing so, carry out a visual check of the lateral position of the prong.

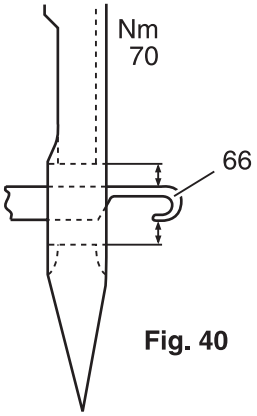

Fig. 40

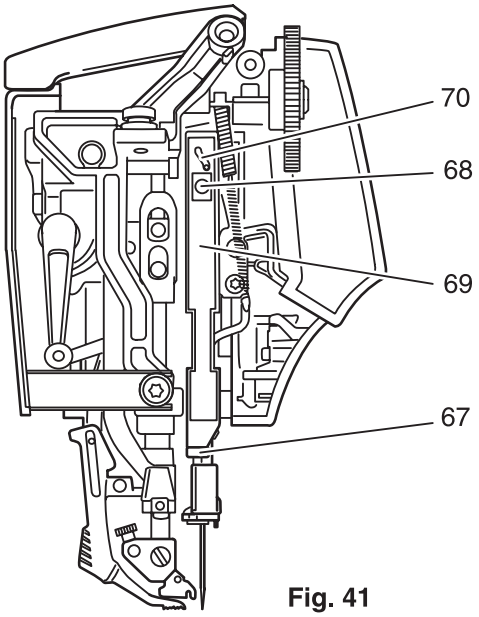

Fig. 41

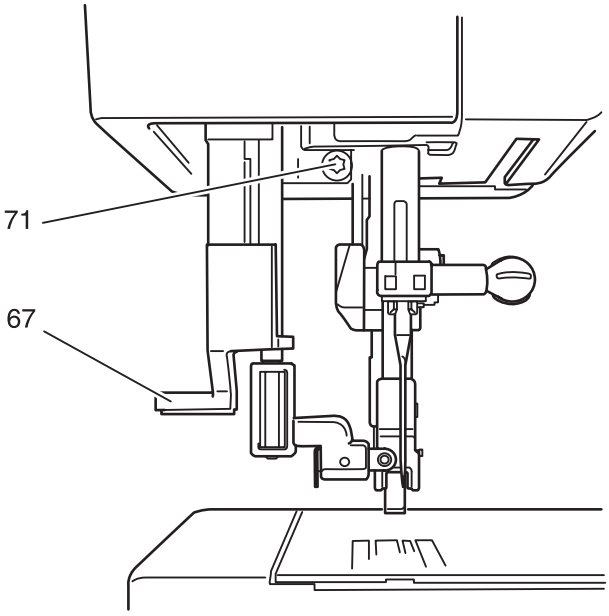

Fig. 42

18. Adjustment of bobbin winder stop

Requirement:

The bobbin winder must stop when the thread has reached a level of 1 mm below the bobbin rim.

Check:

- Wind a bobbin and check that the winder stops as required.

Adjustment:

- Loosen screw 72 (fig. 43).
- Position stop 73 to the left for less thread and to right for more thread.
- Tighten screw 72.

Cross-check:

- Wind a bobbin and check that the winder stops as required.

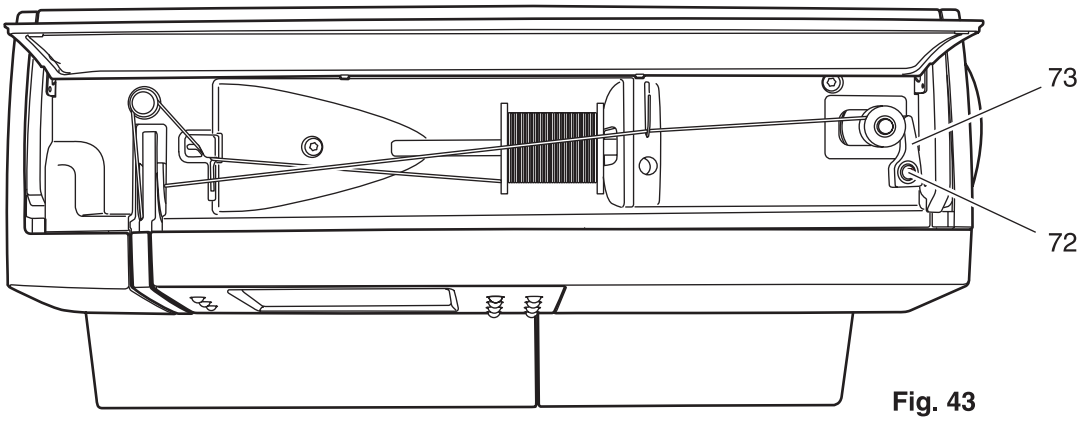

Fig. 43

19. Adjustment of bobbin thread tension

Requirement:

The force required for pulling cotton thread 50/2 or synthetic fiber thread 100/3 off the bobbin must be approximately 25 - 30 g.

Check:

- When a threaded bobbin case hangs on its thread, it must not slide downwards by its own weight.
- With a sharp upward movement of the hand, the thread must run off gradually (fig. 44).
- There must not be any thread waste under the tension spring.
- The tension spring must rest evenly and parallel on the bobbin case.

Adjustment:

- Loosen the knurled screw a little and turn it in again until a resistance is felt when the thread is pulled off.

Check:

- Carry out as described under „Check“

Note:

- Once the bobbin thread tension has been set correctly, tension adjustments must be made only to the needle thread tension.

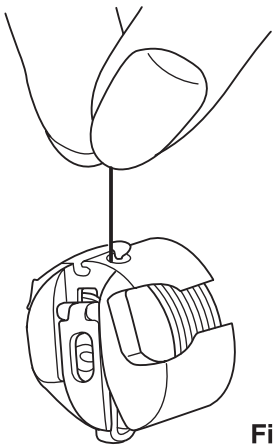

Fig. 44

20. Adjustment of needle thread tension

Requirement:

Within the adjusting range from 3 to 5, the interlacing of the needle thread and the bobbin thread (cotton thread 50/2 or synthetic fiber thread 100/3) must take place approximately in the middle of the fabric in straight and zigzag stitch setting (fig. 45 and fig. 48).

Check:

- Set the needle thread tension at „5“.
- Set stitch pattern „03“ for zigzag and the stitch width at „6.0“.
- Set the stitch length at „2.0“.
- Place a piece of fabric under the zigzag foot and sew.
- Select stitch pattern „01“ for straight stitch and set the stitch length at „2.5“.
- Sew with straight stitch.

Adjustment:

- First turn milled nut 74 fully to the left (fig. 49).
- Set zigzag stitch „03“, stitch width „6.0“, and stitch length „2.0“.
- Sew with zigzag stitch.
- At the same time turn the milled nut gradually in clockwise direction, until the knot is formed in the center of the fabric (fig. 45).

Cross-check:

- Sew with straight stitch and zigzag stitch as described under „Check“.

Fig. 45

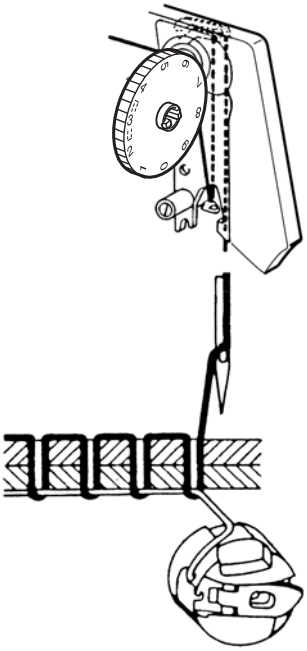

Fig. 46

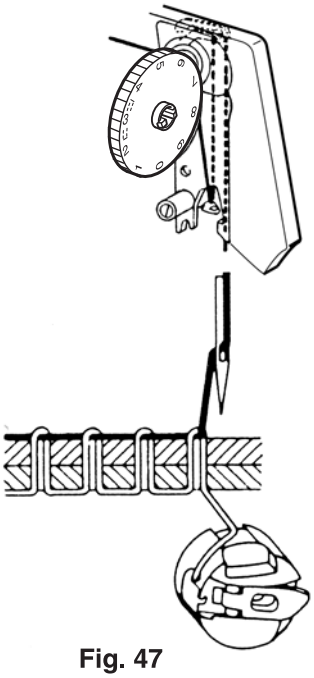

Fig. 47

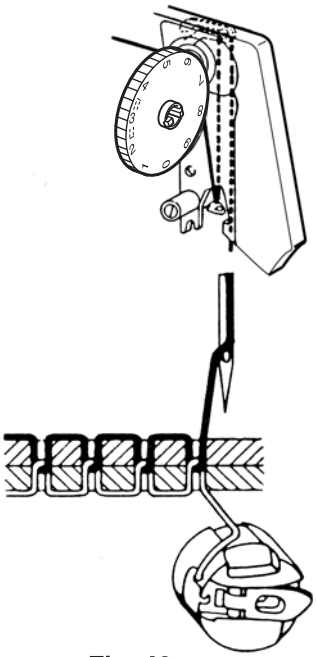

Fig. 48

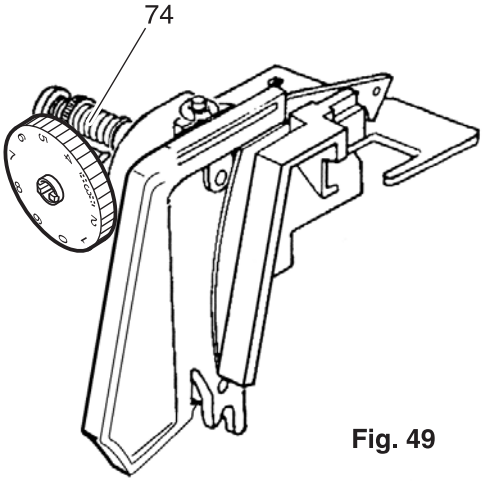

Fig. 49

21. Adjustment of thread check spring stroke

Note:

The tread check spring prevents the descending needle from piercing the slack needle thread.
The needle thread is slackened by the descending take-up lever.

Requirement:

Thread check spring 75 must keep the needle thread taut at least until the needle point enters the fabric (Fig. 50).
The thread check spring must release the needle thread as soon as the lower edge of the needle eye enters the fabric.

Check:

- Select stitch pattern „00“ for straight stitch.
- Set the stitch length at „6.0“.
- Place two pieces of fabric under the sewing foot.
- Sew a few stitches.
- Turn the handwheel and determine the end of the thread check spring stroke.
- Correct slackening of the needle thread takes place when it enters the needle eye not tautly but in a loose curve.

Adjustment:

- Loosen screw 76.
- Turn thread check spring stop sleeve 77 until thread check spring 75 is in the correct position.
- Tighten screw 76.

Cross-check:

- Sew a few stitches and check as described under „Check“.

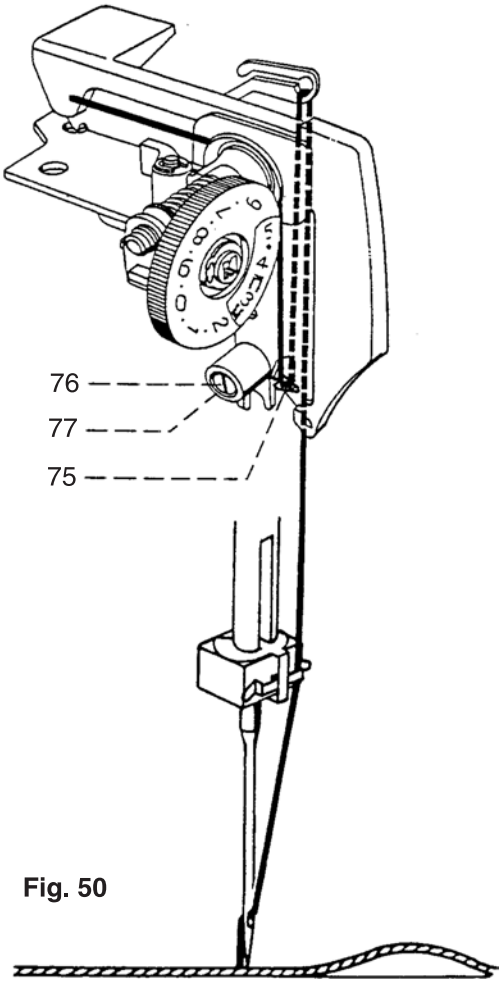

Fig. 50

22. Adjustment of equal forward and reverse stitch length

(for all forward and reverse controlled stitch patterns)

Requirement:

The darning program must be sewn as an exact rectangle (fig. 51) and not as a rhombus (fig. 52 and 53).
The buttonhole bartack must cover the beginning of the right buttonhole seam (fig. 54).
For this purpose the machine must be at operating temperature after 10 to 15 minutes turn-on time.

Check:

- Turn on the machine.
- Touch the „info menu“ icon twice.
  The „context menu“ is shown now.
- Touch the down arrow to browse to the „machine test“.
- Touch the „machine test“ icon.
- Enter the code 254.
- Touch „ok“ to confirm your entry.
- Touch the „adjusting pattern“ icon.
- Touch icon „198“.
- Place a piece of fabric underneath fancy stitch foot „2A“.
- Sew the adjusting pattern „198“.

Preliminary adjustment:

- If the adjusting program „198“ was sewn according to fig. 52, turn the adjusting eccentric with a screwdriver just 2 to 4 degrees in direction „A“ according to fig. 55.
- If the adjusting program „198“ was sewn according to fig. 53, turn the adjusting eccentric according to fig. 55 just 2 to 4 degrees in direction „B“.

Test:

- Sew adjusting program „198“ and check.

Precise adjustment:

- Touch the „info menu“ icon.
- Touch icon „200“.
- Place a piece of fabric underneath buttonhole foot „5A“.
- Sew adjusting pattern „200“.
- The eyelet should be nicely rounded and the wedge tack should be sewn evenly, with a tolerance of plus/minus 2 stitches (fig. 54).
- If stitches get shorter turn adjusting eccentric slightly towards you.
  If stitches get longer turn adjusting eccentric slightly away from you.

  It is important that the two programs are in their own tolerance as well as in tolerance to each other.

Note:

If very different sewing threads or difficult fabrics are used, buttonholes, utility stitches or fancy stitches may be sewn with shifts in the pattern design.
To correct this, the customer can adjust the balance.
Always correct only the reverse stitch length.

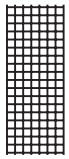

Fig. 51

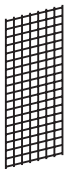

Fig. 52

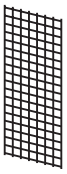

Fig. 53

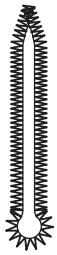

Fig. 54

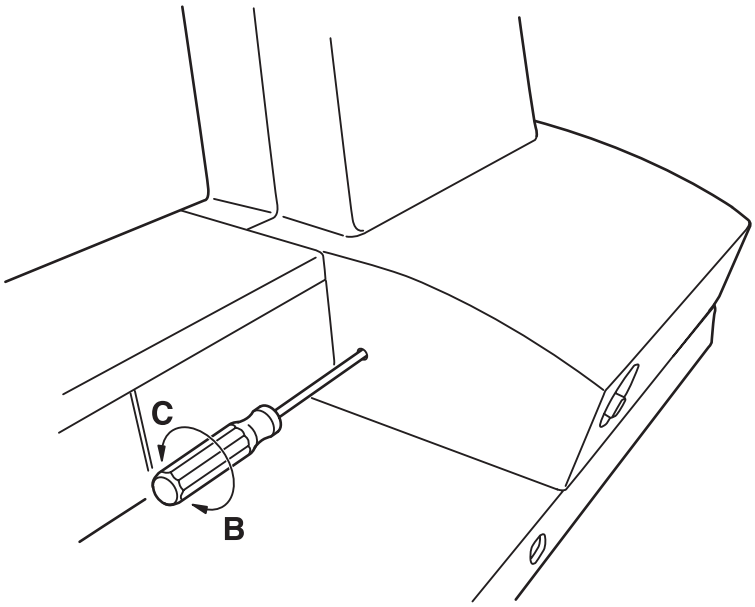

Fig. 55

23. Making up a sewing sample

When all sewing checks are completed and the machine sews perfectly, a sewing sample is to be made. This sewing sample should contain the most important stitch patterns, which can be sewn on a repaired machine (fig. 56).

If the customer has special requirements, these should appear on a separate sewing sample.

The following is a sewing sample from the PFAFF performance 2056

Stitch program	No.	Stitch width	Stitch length or pattern length	Presser foot no.
1 Straight stitch	01		2.5	Zigzag foot „0“
2 Zigzag stitch	03	6.0	2.0	Zigzag foot „0“
3 Honeycomb stitch	07	6.0	2.0	Zigzag foot „0“
4 Linen buttonhole	50	4.5	1	Buttonhole foot „5“
5 Fancy stitch	197	6.0	0.30	Fancy stitch foot „2“

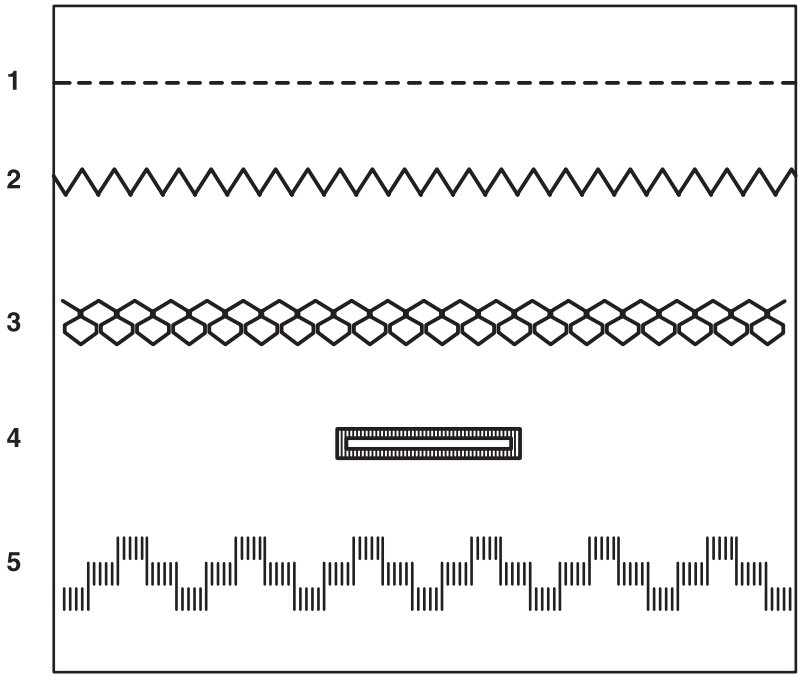

Fig. 56

Repair Instructions

24. Dismantling and assembling the needle thread tension

Removal:

- Remove the needle thread tension.
- Press the two plastic noses 78 together and remove tension dial 79 (fig. 57).
- Remove spring disc 80.
- Turn milled nut 81 out of guide 82.
- Remove guide 82.
- Remove milled nut 81 and pressure-spring 83.
- Pull out or knock out cemented stud 84 complete with pressure piece 85 and the three tension discs 86, 87 and 88.

Fitting:

- Insert tension stud 84 with the three tension discs 86, 87 and 88 and the pressure piece 85.
- Cement the tension stud into the mounting plate with Onmivit-Rapid.
- Push pressure-spring 83 and milled nut 81 onto tension stud.
- Insert guide 82 with its right side and fully screw in milled nut 81.
- Push on tension dial 79 making sure that the guide nose is in contact with the outer surface of the curve.
- Install the needle thread tension.
- Set the needle thread tension according to section 20.

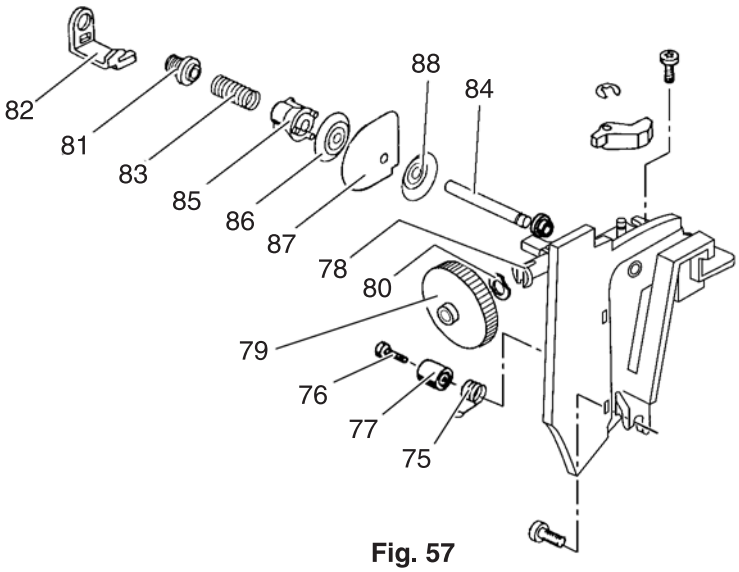

Fig. 57

25. Changing the torsion spring in handwheel

Dismantling the handwheel

- Remove stand cover in accordance with the instructions for dismantling the housing.
- Turn the handwheel until the handwheel cutout is facing upward (fig. 58).
- Push lug 89 to the rear using a screwdriver.
- Pull off the handwheel from the arm shaft to the right.
- Tilt the machine to the rear.
- Place a rag underneath the arm shaft.
- Punch out tapered notch pin 90 using a punch from the arm shaft.
- Remove spring washer 91.
- Loosen motor-mounting fastening screw 92 (fig. 59).
- Push the motor mounting up slightly.
- Remove the motor's flat toothed belt 93.
- Remove sprocket 94, bushing 95, torsion spring 96 and spring washer 97 (fig. 58).

Fitting the handwheel

- Push spring washer 97 onto the arm shaft.
- Insert torsion spring 96 into bushing 95.
- Attach bushing 95 together with torsion spring 96 onto the arm shaft.
- Press sprocket 94 onto the arm shaft.
- Push lockwasher 91 onto the arm shaft.
- Fit the motor's flat-toothed belt 93 (fig. 59).
- Tighten the motor's flat-toothed belt 93 in accordance with section 31, tightening fastening screw 92
- very securely at the same time.
- Tilt back the machine and place a rag underneath the arm shaft.
- Punch tapered notch pin 90, so that its sides have the same distance to the arm shaft (fig. 58).
- Push the handwheel onto the arm shaft, so that lug 89 locks in place above tapered notch pin 90.
- Attach the stand cover, the housing insert as well as the top cover.

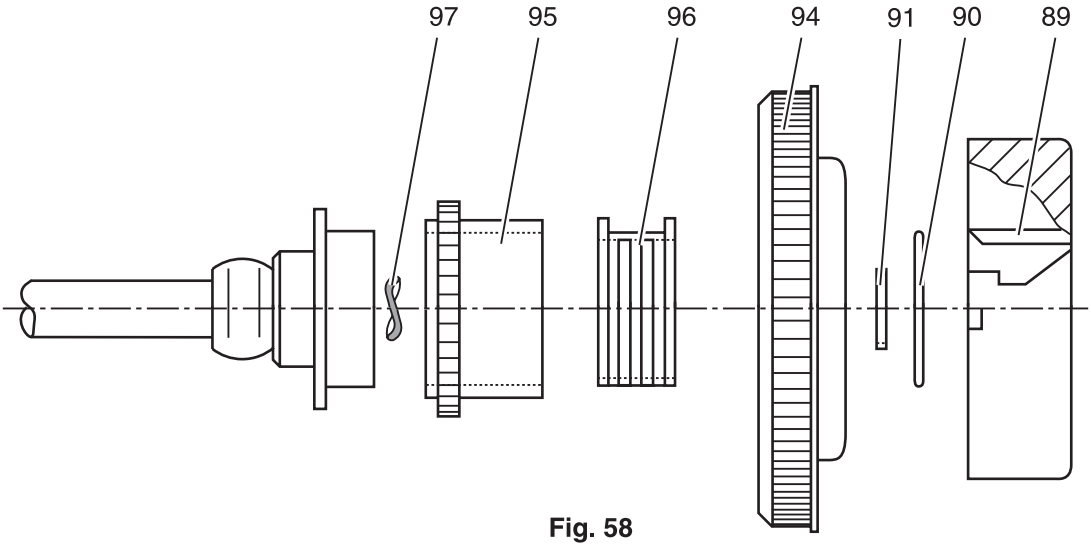

Fig. 58

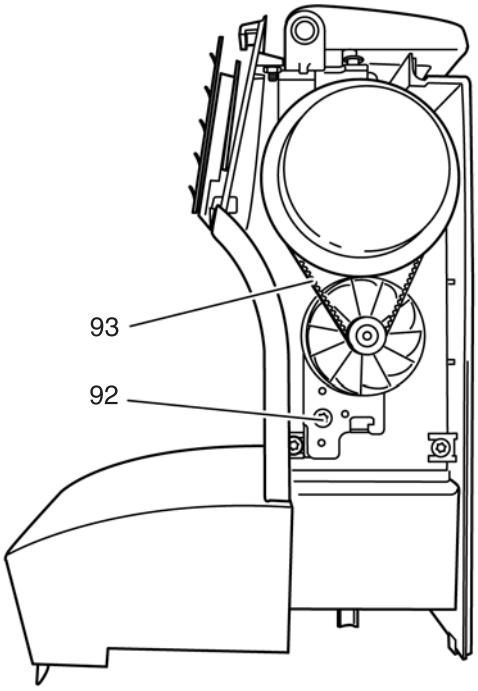

Fig. 59

26. Dismantling and assembling the sewing hook

Removal:

- Remove the needle.
- Unscrew the presser foot.
- Remove the bobbin case.
- Unscrew the bobbin case position finger.
- Take out the three screws with springs from behind (fig. 60).
- Remove the bobbin case base with sewing hook gib (fig. 61).
- Turn the sewing hook gib to the left or to the right out of the bobbin case base (fig. 62).
- Clean the sewing hook, bobbin case base and hook gib.

Fitting:

- Turn the handwheel until the opening of the sewing hook faces to the left (fig. 63).
- Turn the sewing hook gib to the left into the bobbin case base (fig. 64).
- Insert the bobbin case base complete with sewing hook gib into the sewing hook (fig. 65).
- Fasten the sewing hook gib from behind with three screws with springs (fig. 60).
- Screw on and adjust the bobbin case position finger.

27. Cleaning and oiling the machine

Note:

The machine is equipped with oil-soaked calotte bearings and is therefore maintenance-free for the user.

After repair work, the mechanic should oil the machine with BP Energol HLP 46 or HLP 80.

Calotte bearings or parts must not be cleaned with gasoline, petroleum, kerosene, thinners, trichlorethylene etc.

Dirty or clogged calotte bearings or parts may only be cleaned mechanically by brushing them off.

They are then to be oiled with BP Energol HLP 46 or HLP 80.

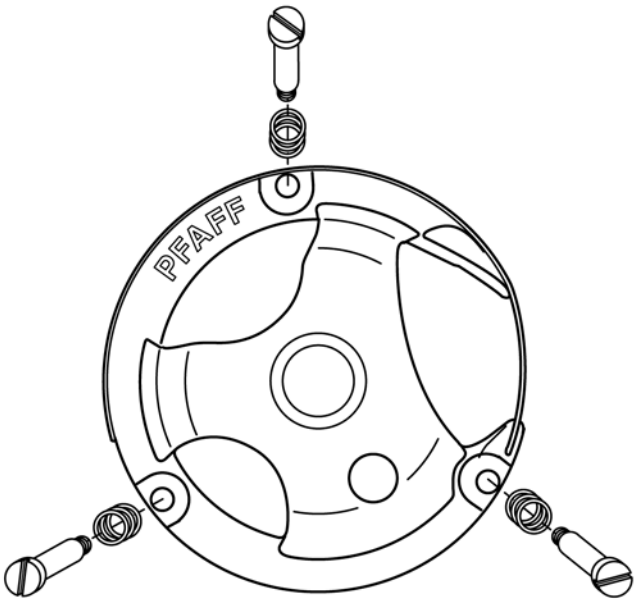

Fig.60

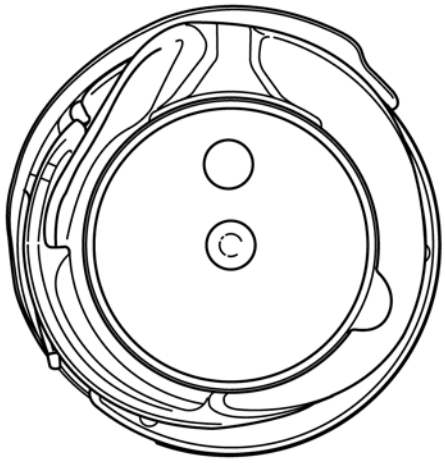

Fig. 61

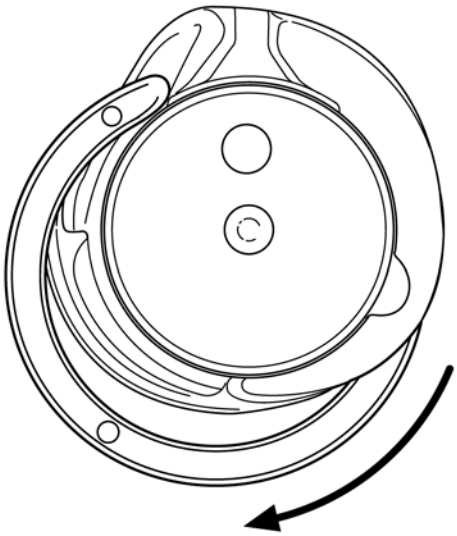

Fig.62

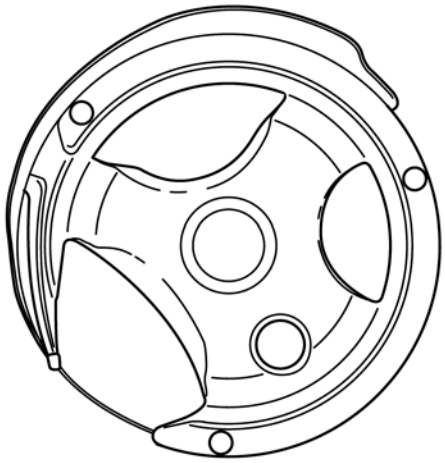

Fig. 63

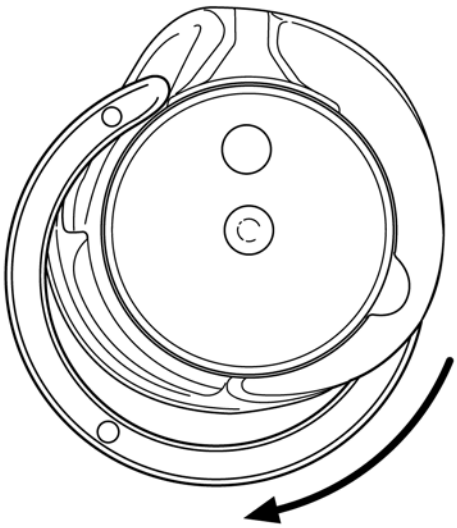

Fig.64

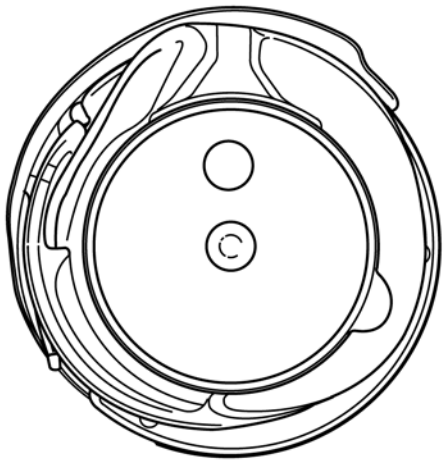

Fig. 65

28. Changing the flat-toothed belt

Removal:

- Remove the housing in accordance with the adjustment and repair instructions.
- Turn the handwheel until the lobe of feed eccentric 5 is positioned at the rear (fig. 66).
- Loosen fastening screw of tensioning roller.
- Tilt the machine to the rear.
- Unscrew and remove fastening screw 98 of clamping plate 99 on the lower right calotte bearing.
- Remove the clamping plate.
- Slip off flat-toothed belt 100 from the upper and lower belt wheels 101 and 102.
- Lift complete hook driving shaft 28 out of the lower right calotte bearing 103 as far as it will go.
- Pull the flat toothed belt between calotte 104 and calotte bearing 103.
- Disconnect tension spring 105 on needle bar frame 106 (fig. 67).
- Remove lockwasher 54 on the needle bar frame.
- Remove circlip 107 on zigzag stepping motor 51.
- Dismantle the complete connecting rod 108.
- Loosen screw 109 on needle bar crank 110.
- Unscrew and remove both clamping plate screws 111.
- Dismantle both clamping plates 112.
- Lift the arm shaft with the crank as far out as possible from calotte bearings 113 and 114.
- Hold the needle bar crank firmly.
- At the same time move arm shaft 115 to the right until both parts are disengaged.
- Dismantle the complete arm shaft.
- Remove the flat-toothed belt from the housing to the top.

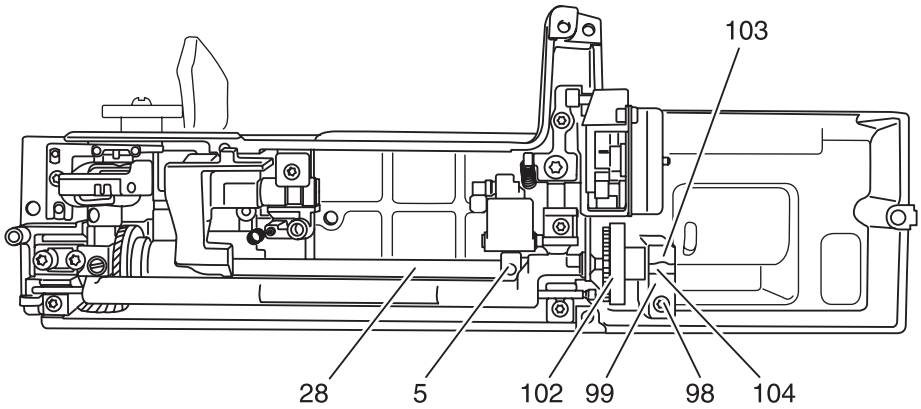
103
28
5
102
99
98
104

Fig. 66

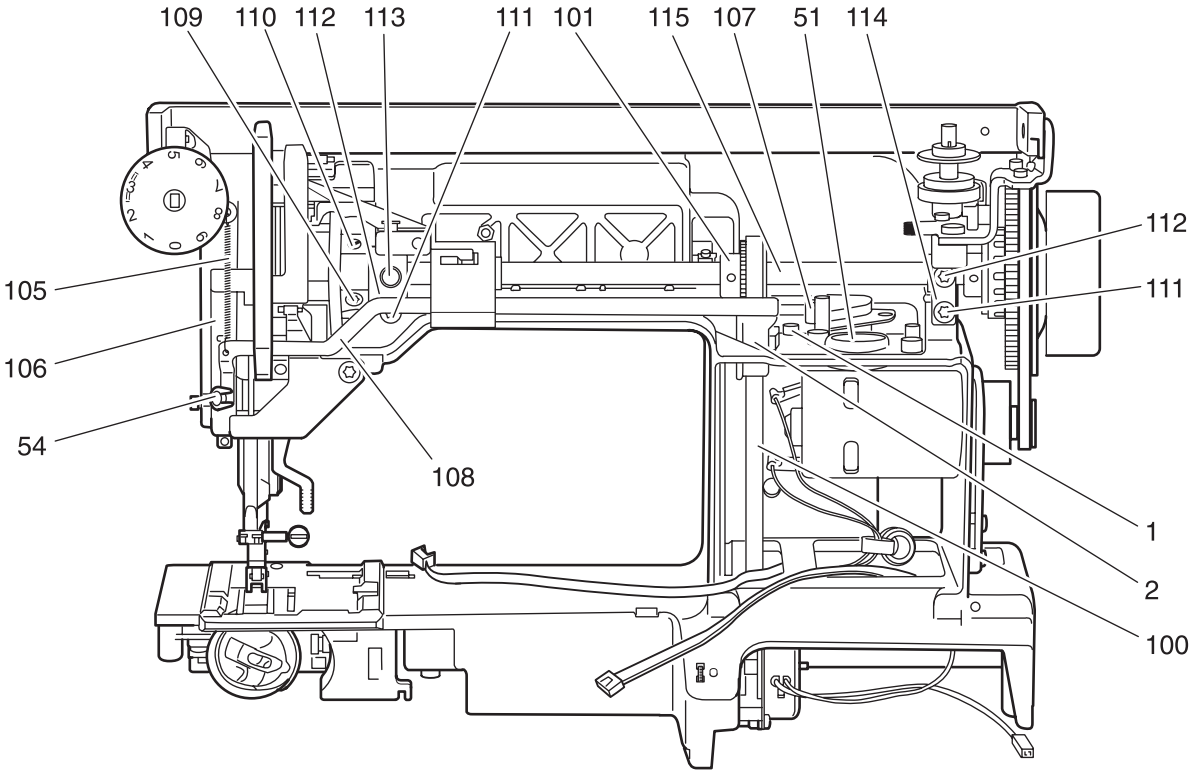
109
110
112
113
111
101
115
107
51
114
105
106
54
108
112
111
1
2
100

Fig. 67

Fitting:

- Lift complete hook driving shaft 28 out of the lower right calotte bearing 103 as far as it will go (fig. 66).
- Pull the flat toothed belt between calotte 104 and calotte bearing 103.
- Place hook driving shaft 28 exactly together with calotte 104 in the lower right calotte bearing 103.
- Fit clamping plate 99 and fasten with screw 98.
- Pull flat-toothed belt 100, which is in the inner housing, upwards (fig. 67).
- Feed arm shaft 115 from the right into the housing.
- Place flat-toothed belt 100 over arm shaft 115.
- Feed arm shaft 115 into needle bar crank 110.
- Insert arm shaft 115 into calotte bearings 113 and 114.
- Fit clamping plates 112 and fasten with screws 111.
- Check for free movement of arm shaft, if necessary establish the free movement.
- Place flat-toothed belt 100 onto the upper and lower sprockets 101 and 102 (fig. 66).
- Set the flat-toothed belt's tension according to section 1.
- Turn the handwheel until the fastening screw of the synchronizer control cam 35 faces downwards (fig. 68).
- At the same time pin 116 on the upper sprocket faces upwards.
- Press needle bar crank 110 against the calotte of the left calotte bearing 113 (fig. 67).
- At the same time tighten screw 109 on needle bar crank 110.
- Check for free movement of the arm shaft, if necessary establish it.
- Attach connecting rod 108.
- Mount lockwasher 54 onto the needle bar frame.
- Attach pull-spring 105.
- Attach circlip 107 to the zigzag stepping motor.
- Mount the front housing shell and fasten with torx screws 23, 24 and 25.
- Mount the rear housing shell and fasten with torx screws 12 and 13.
- Attach connection plugs 14 until 22 to the circuit board on the front housing shell.
- Locate the baseplate, the freearm lid with bobbin thread monitor and the buttonhole sensor to the right next to the machine.
- Attach connection plug 9 to the circuit board on the front housing shell.
- Attach the needle plate.
- Attach connection plugs 4, 5 and 6 to the circuit board on the baseplate.

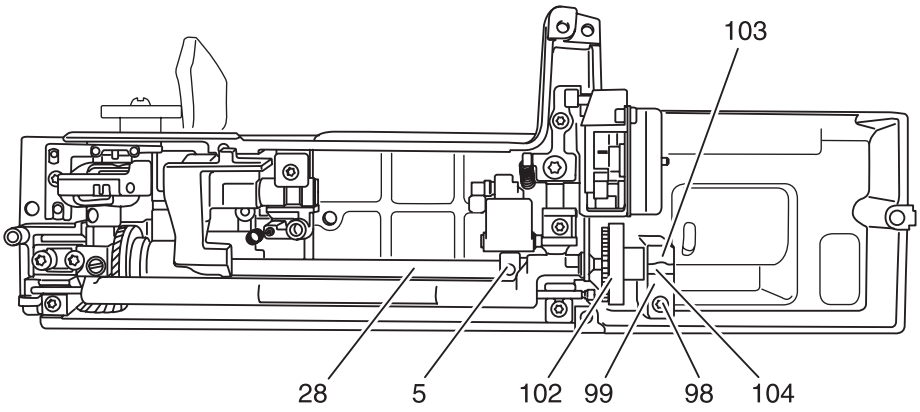

Fig. 66

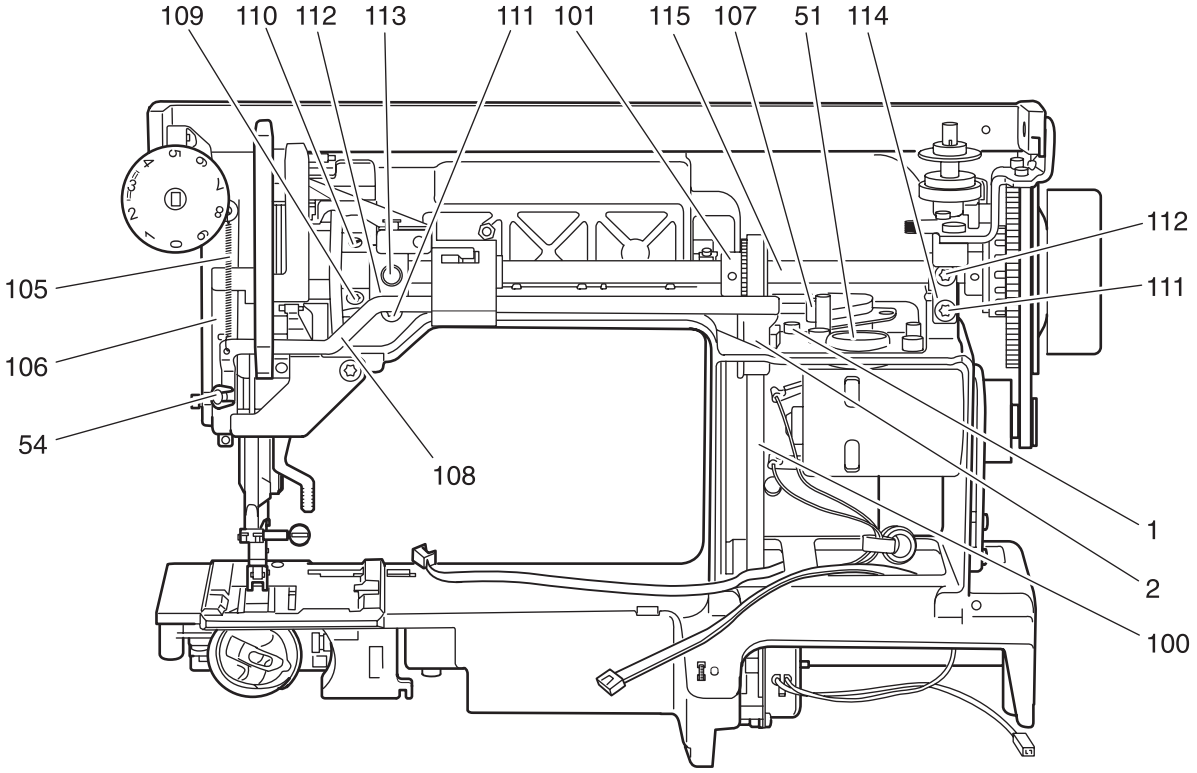
109
110
112
113
111
101
115
107
51
114
112
111
105
106
54
108
1
2
100

Fig. 67

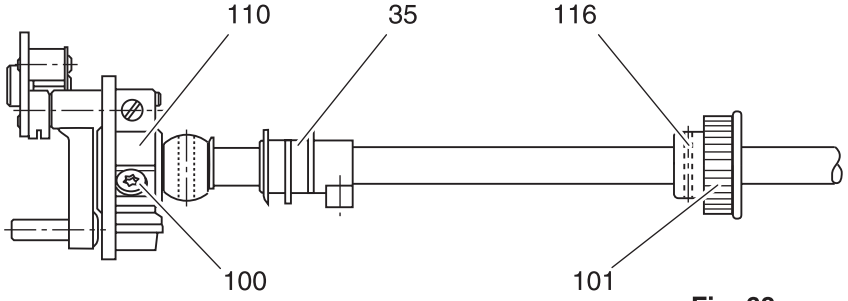
110
35
116
100
101

Fig. 68

Adjusting the machine:

- Tilt the machine towards the rear.
- Disconnect spring 3 (fig. 69).
- Unscrew and remove screw 4.
- Turn the handwheel until the lobe of feed eccentric 5 is at the rear.
- Fold feed regulator 6 downward and remove it with link 7 to the left from feed bar pin.
- Check that the slide block can be moved easily without play or binding into the slotted lever.
- If necessary, adjust according to section 2.
- Fold feed regulator 6 to the rear and then upward over feed eccentric 5.
- Insert screw 4 into clamping plate 21 and tighten just a little.
- Push pin 20 to the side until lever 7 and driving bar 19 still have a little play and move easily.
- Tighten screw 4.
- Attach spring 3.
- Loosen the three screws 29 in the lower flat-toothed belt sprocket 102.
- Bring the needle bar to its lowest position by turning the handwheel.
- Fit spacer (63-102 600-18) on the needle bar and push up against the needle bar frame.
- Push needle rise clamp (61-111 600-35) on the needle bar.
- Push 2 mm feeler gauge (61-111 600-02) with its cutout on the needle bar above the needle rise
- clamp.
- Loosen the needle rise clamp and push the 2 mm feeler gauge upward against the spacer.
- Tighten the milled screw on the needle rise clamp.
- Turn the handwheel back and forth.
- If there is any play at the feeler gauge, repeat this procedure.
- Remove the 2 mm feeler gauge.
- Turn the handwheel in the normal direction until the needle rise clamp rests on the spacer.
- Hold the handwheel at this position.
- Turn hook driving shaft 28 in the normal direction until the pin gauge can be inserted in the hole of feed eccentric 5 and pins 27.
- Insert the pin gauge and tighten one of the screws 29.
- Remove the pin gauge, needle rise clamp and the spacer and tighten all three screws 29.

Note:

On having tightened the screws 29, there must not be any play between the lower flat-toothed belt sprocket 102 and calotte 104.

- Check section 4 „Adjustment of the feed dog height“.
- Carry out section 5 „Adjustment of the synchronizer“.
- Carry out section 14 „Sewing hook timing“.
- Insert the buttonhole sensor.
- Attach the free-arm cover and fasten with both fastening screws 7.
- Bring the feed-dog lowering mechanism to the normal working position.
- Engage both feed regulators.

- Fold the baseplate towards the machine.
- Attach the cable clip.
- Fasten the baseplate on the housing with the three fastening screws.
- Attach the face plate.
- Attach connection plugs 2 and 3 onto the circuit board of the front housing shell.
- Install the sewing lamp cable.
- Mount the facing panel of the front housing panel.
- Insert the housing insert and fasten with the torx screws.
- Attach the top cover.

The following points must be checked and adjusted:

- Section 19 „Adjustment of bobbin thread tension“
- Section 20 „Adjustment of needle thread tension“
- Section 22 „Adjustment of equal forward and reverse stitch length“

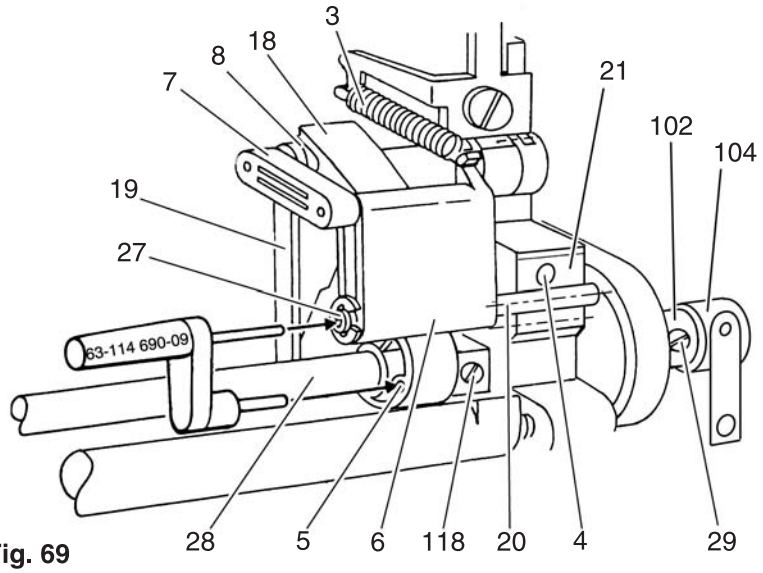

Fig. 69

29. Changing the bevel gears

Note:

Always change bevel gears in pairs.

Removal:

- Remove the mains plug of the machine.
- Remove the detachable work support.
- Unscrew and remove the three fastening screws of the baseplate.
- Remove the three connection plugs 4, 5 and 6 from the circuit board.
- Unscrew and remove both fastening screws 7 on the free-arm cover.
- Bring the feed-dog lowering mechanism to the normal working position.
- Using a small screwdriver, disengage both feed regulators 8.
- Remove the free-arm cover carefully from the housing to the left and place it aside the machine.
- Remove the needle plate.
- Remove the buttonhole sensor and place it aside the machine.
- Dismantle feed-dog lowering mechanism 117 (fig. 70).
- Disconnect both pull-springs 3 and 9.
- Unscrew and remove screw 64 of the bobbin case position finger 65.
- Remove the bobbin case position finger.
- Turn the handwheel until the lobe of feed eccentric 5 is at the rear.
- Unscrew and remove screw 4 and clamping plate 21.
- Fold feed regulator 6 downwards and remove it with link 7 to left from the driving bar pin.
- Loosen the three screw 29 on the lower flat-toothed belt sprocket 102.
- Unscrew and remove screw 118 of feed eccentric 5.
- Unscrew and remove screw 60 of lifting eccentric 119 (fig. 71).
- Move hook driving shaft 28 as far as possible to the right (fig. 70).
- Loosen screw 22 and remove pin 23.
- Unscrew and remove screw 10 of clamping plate 120.
- Remove the left cylindrical pin 12.
- Unscrew and remove both fastening screws 121 of the hook bearing.
- Pull feeding stroke shaft 14 slightly downwards and dismantle the complete sewing hook together with lifting eccentric 119.
- Loosen boths screw 58 of the sewing hook.
- Pull the small hook driving shaft with bevel gear 59 downwards to remove.

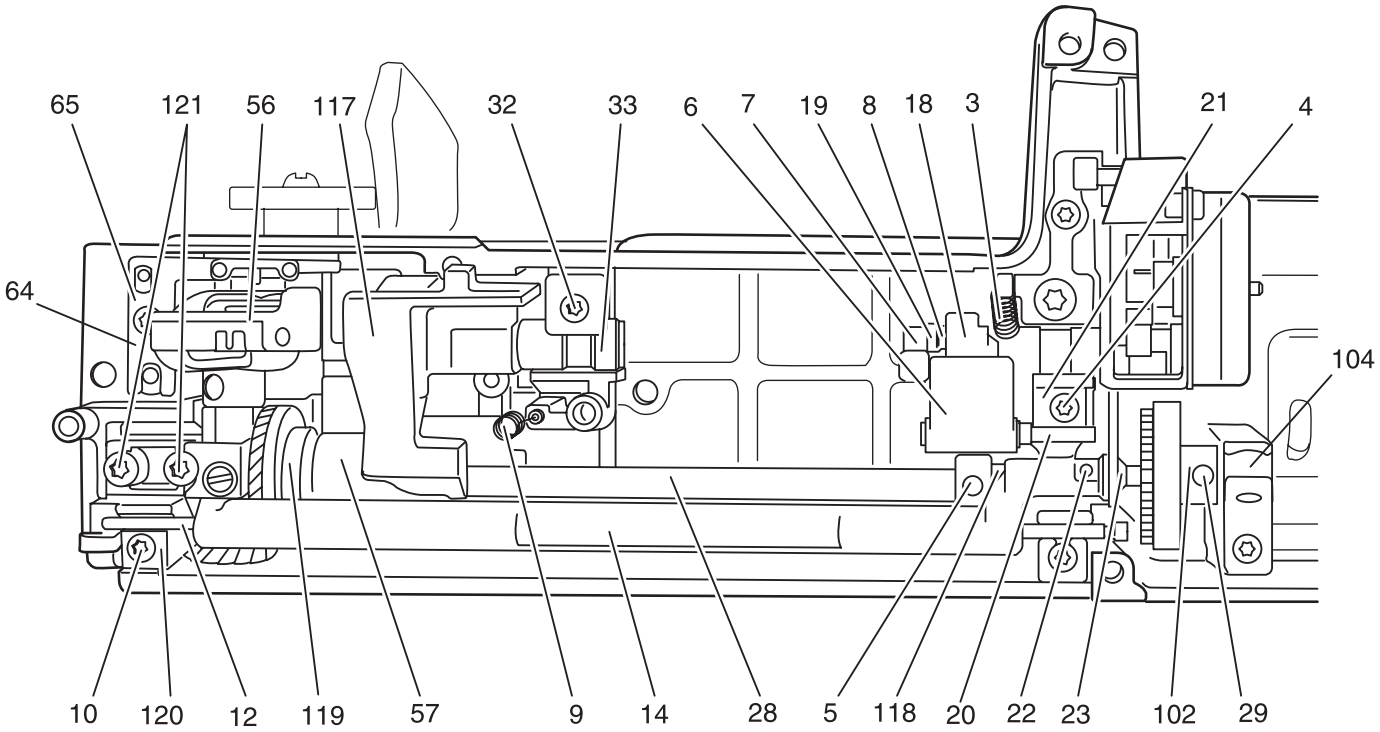
65
121
56
117
32
33
6
7
19
8
18
3
21
4
64
104
10
120
12
119
57
9
14
28
5
118
20
22
23
102
29

Fig. 70

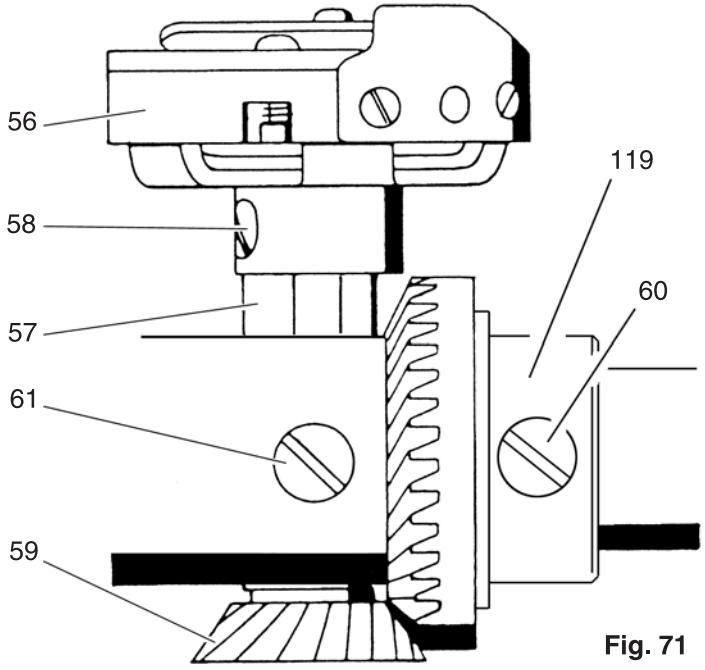
56
58
57
61
59
119
60

Fig. 71

Fitting:

- Insert the new hook driving shaft with bevel gear 59 in the sewing hook bearing (fig. 71).
- Mount sewing hook 56 with the plastic disk on the sewing hook bearing and set it.
- Fasten the sewing hook bearing using both screws 121 (fig. 70).

Note that the sewing hook bearing is fastened parallel to the housing.

- Push the hook driving shaft to the left until circlip rests against the lower right calotte bearing 104.
- Place the hole of lifting eccentric 119 above the surface of hook driving shaft 28.
- Swivel in screw 60 of lifting eccentric 119 and fasten slightly (fig. 71).
- Press lower flat-toothed belt socket 102 to the right against calotte bearing 104 (fig. 70).
- At the same time tighten one of screws 29.
- Check that the hook driving shaft has zero play and moves free of binding.
- Tighten all three screws 29 of the lower flat-toothed belt socket.
- Slightly loosen screw 60 (fig. 71).
- Push the bevel gear and lifting eccentric 119 to the left until it rests on bevel gear 59 without any play (fig. 70 and 71).
- Tighten screw 60 on the surface of hook driving shaft 28.
- Screw in dog-point screw 118 into feed eccentric 5 or the hook driving shaft (fig. 70).

Note:

Dog-point screw 118 must always protrude from feed eccentric 5 on the opposite side of screw 60 in lifting eccentric 119 (fig. 70 and 71).

- Insert cylindrical pin 12 and fasten with the clamping plate (fig. 70).
- Adjust the feed driving shaft according to section 2.
- Fit pin 23 with the washer situated to the left of the pull rod without any play.
- Tighten screw 22.
- Pull the feed dog to the front.

Important:

The complete feed driving shaft with top feed must slide slowly to the rear.

- Fit slide block 8 with the spring on the pin and insert into slide way in the correct curve radius.
- Check that the slide block can be moved easily without play or binding in the slide way.
- Push link 7 complete with feed regulator 6 to the right onto the connecting bar pin.
- Turn feed regulator 6 to the rear and then over feed eccentric 5 from the top.
- Insert screw 4 with clamping plate 21 and tighten slightly.
- Shift stud 20 laterally until link 7 and connecting bar 19 only have a slight play and are freely movable.
- Tighten screw 4.
- Fit spring 3.
- Fit the feed dog lowering mechanism.
- Attach spring 9.
- Set the base plate against the machine.
- Mount the three connection plugs 4, 5 and 6 on the circuit board.

Now the following adjustments are to be carried out:

- Section 3: Timing of the feed motion
- Section 4: Adjustment of feed dog height
- Section 5: Adjustment of synchronizer
- Section 12: Adjustment of hook-to-needle clearance
- Section 14: Hook timing
- Section 15: Adjustment of needle bar height
- Section 16: Adjustment of bobbin case position finger

- Install cable.
- Insert the buttonhole sensor.
- Attach the free-arm cover and secure with both fastening screws 7.
- Bring the feed dog lowering mechanism to its normal working position.
- Engage both feed regulators 8.
- Attach the cable clip.
- Secure the base plate with the three fastening screws to the housing.

Now the following adjustments are to be checked or carried out:

- Section 19: Adjustment of bobbin thread tension
- Section 20: Adjustment of needle thread tension
- Section 22: Adjustment of equal forward and reverse stitch length.

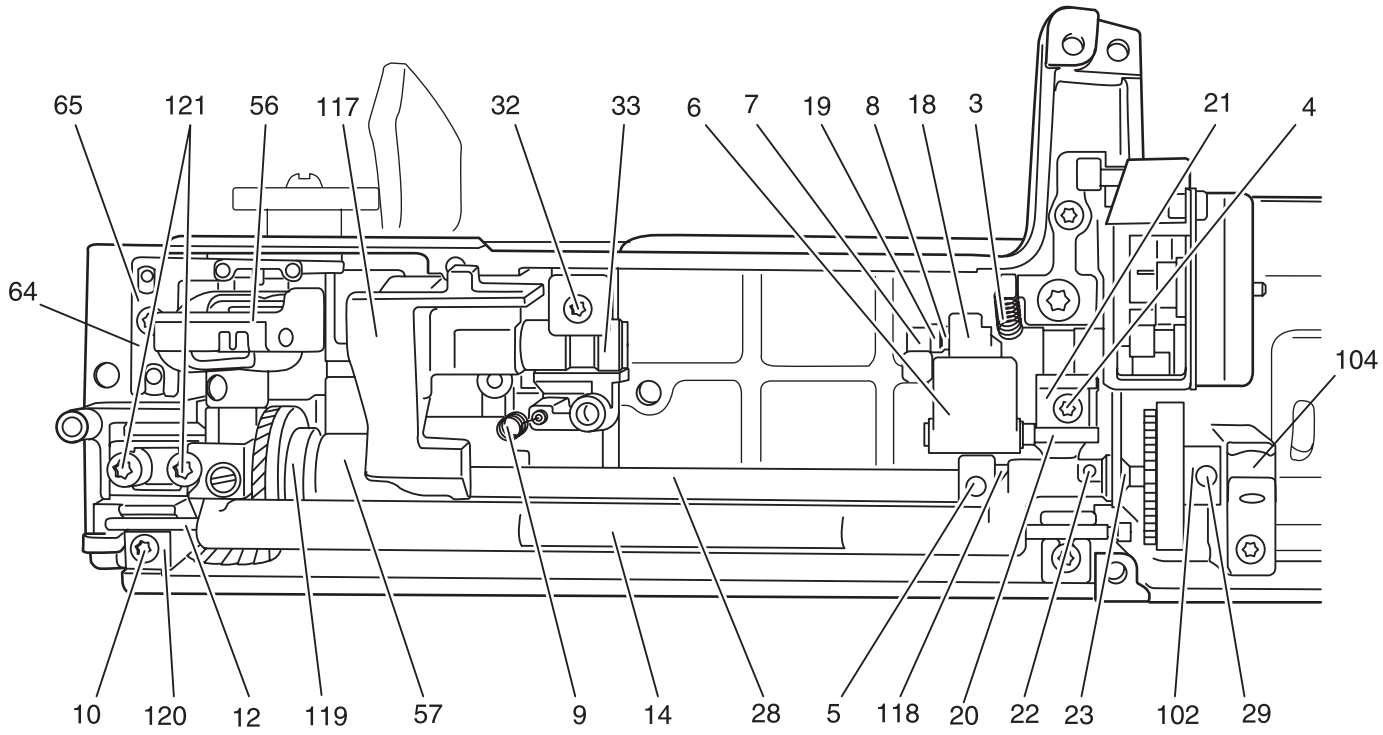

Fig. 70

30. Changing the base circuit board

Note:

The base circuit board is only exchanged as a complete unit.

Removal:

- Remove the mains lead from the mains socket and from the machine.
- Remove the detachable work support.
- Unscrew and remove the three fastening screws on the base plate.
- Tilt the base plate to the front.
- Remove the connection plug of 12-wire flat cable 4, remove 6-wire flat cable 5 and motor cable 6 from the circuit board (fig. 72).

Fitting:

- Set the new base plate complete against the machine.
- Mount three connection plugs 4, 5 and 6 on the circuit board.
- Fold the base plate against the machine and secure it with the three screws.
- After a running-in time of 10 - 15 min. check the adjustment of equal forward and reverse stitch length in accordance with section 22 of the service manual.

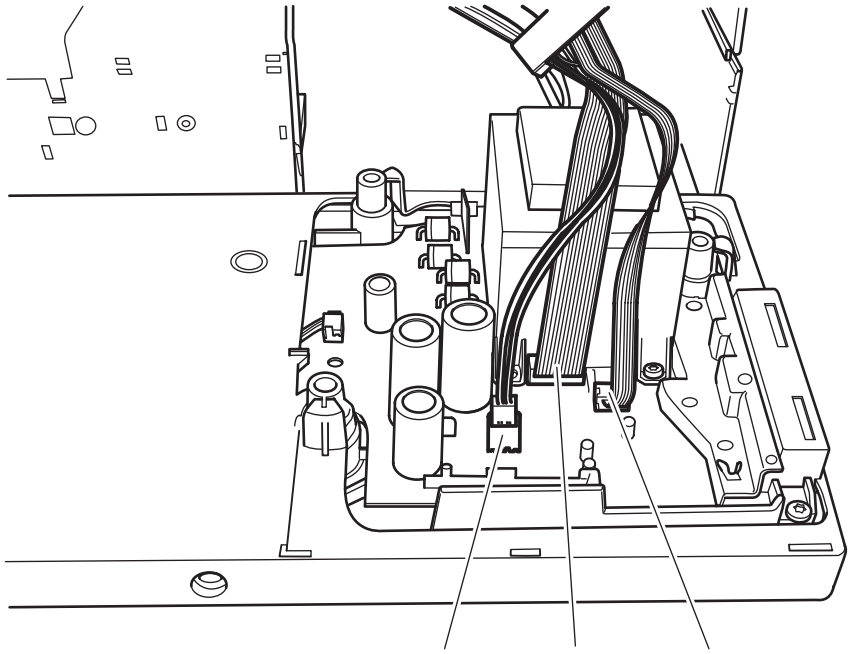

Fig. 72

Notes

31. Changing the upper circuit board

Removal:

- Pull out the mains plug and the socket on the machine.
- Remove the needle and the presser foot shoe.
- Remove the detachable work support.
- Remove the top cover.
- Unscrew and remove the two torx screws of the housing insert.
- Remove the housing insert.
- Slightly raise both lugs 1 and remove the facing panel of the front housing panel by swiveling it downwards (fig. 73).
- Remove connection plug 2 and 3 from the circuit board (fig. 74).
- Remove the green connection plug 9 from the circuit board.
- Remove the connecting plug 14 from presser bar lifter sensor.
- Remove the connecting plug 15 from button hole sensor.
- Remove the connecting plug 122 from ZZ connecting wire.
- Remove the connecting plug 16 from ZZ stepping motor.
- Remove the connecting plug 17 from feeding stepping motor.
- Remove the connecting plug 18 from speed sensor.
- Remove the ESD cable 19.
- Remove the connecting plug 20 from the knee lifter.
- Remove the connecting plug 21 from presser bar stepping motor.
- Remove the connecting plug 22 from PC board for presser bar stepping motor.
- Unscrew and remove screws 123, 124 and 125.
- Remove the complete circuit board.

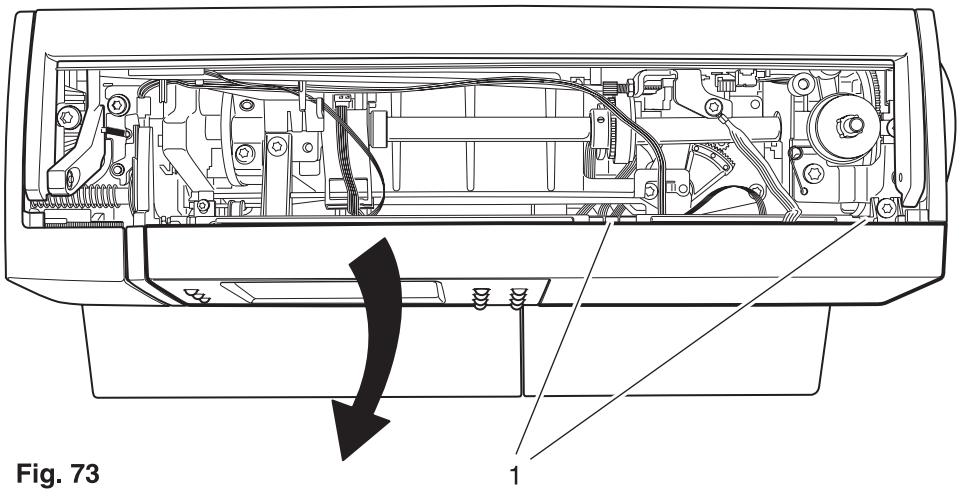

Fig. 73

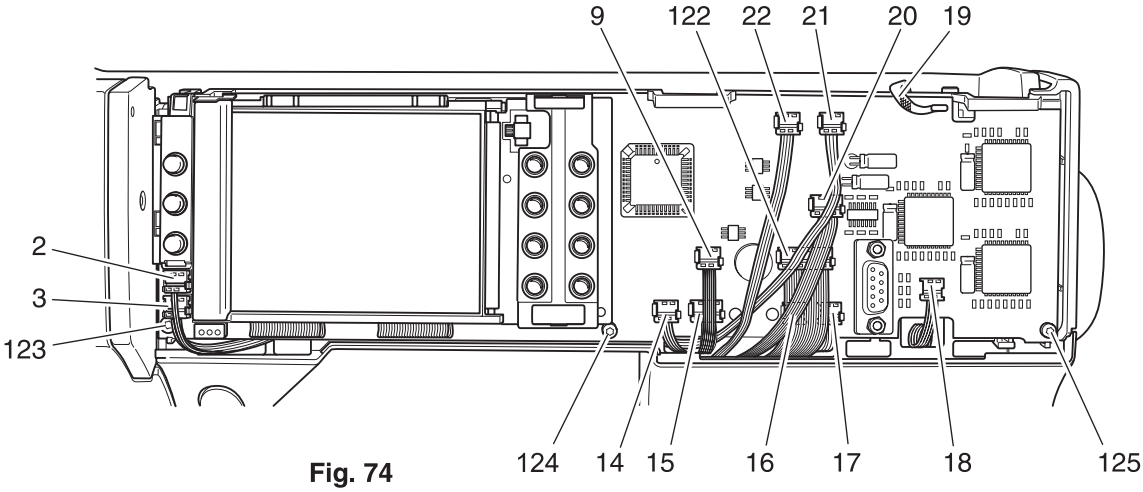

Fig. 74

Fitting:

- Place the circuit board on the front housing panel.
- Secure the circuit board with screws 123, 124 and 125 (fig. 74).
- Mount connection plugs 2, 3, 9, 14, 15, 16, 17, 18, 19, 20, 21, 22, and 122 onto the circuit board.
- Mount the facing panel onto the front housing panel, making sure that both lugs 1 lock into place (fig. 73).
- Attach the housing insert and secure with both torx screws.
- Attach the folding cover.
- After a running-in time of 10 - 15 min. check the adjustment of equal forward and reverse stitch length in accordance with section 21 of the service manual.

32. Changing the keypad

Removal:

- Remove the mains lead from the mains socket and from the machine.
- Remove the detachable work support.
- Remove the folding cover.
- Unscrew and remove both torx screws of the housing insert.
- Remove the housing insert.
- Raise both lugs 1 slightly and remove the facing panel of the front housing panel in the direction of the arrow (fig. 75).
- Raise both lugs 126 and 127 up and down slightly (fig. 76).
- Push the complete keypad 128 slightly up until the keypad can be removed from the circuit board.

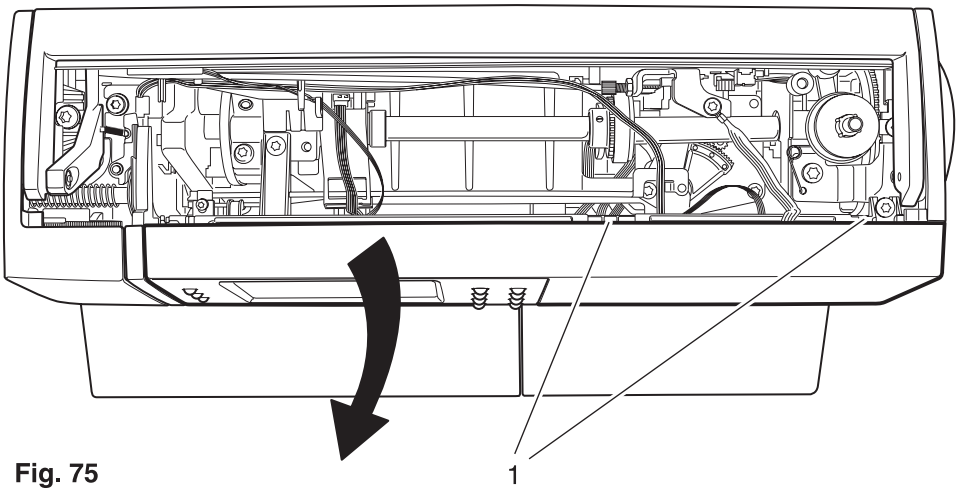

Fig. 75

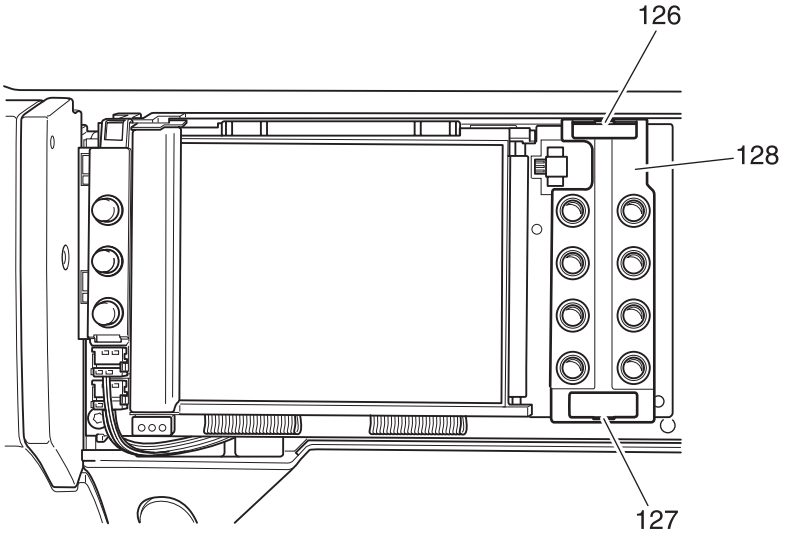

Fig. 76

Fitting:

- Mount the keypad onto the circuit board whilst making sure that the lugs 126 and 127 lock in completely behind the circuit board (fig. 76).
- Mount the facing panel onto the front housing panel and make sure that both lugs 1 lock fully into place (fig. 75).
- Attach the housing insert and secure with both torx screws.
- Attach the folding cover.
- Carry out a functional test for all keys.
- After a running-in time of 10 - 15 min. check the adjustment of equal forward and reverse stitch length according to section 22 of this service manual.

33. Changing the synchronizer circuit board

Removal:

- Remove the mains lead from the mains socket and from the machine.
- Remove the detachable work support.
- Remove the folding cover.
- Unscrew and remove both torx screws of the housing insert.
- Remove the housing insert.
- Raise both lugs 1 slightly and remove the facing panel in the direction of the arrow (fig. 77).
- Remove connection plug 3 from the circuit board on the front housing panel (fig. 78).
- Remove the connecting wire from the cable chanel.
- Unscrew and remove fastening screw 126 on circuit board 36 using the torx offset screwdriver TX 15 (fig. 79).
- Remove the complete circuit board 36.

Fitting:

- Secure circuit board 36 to the housing with fastening screw 126, using the torx offset screwdriver TX 15.
- Make sure that the circuit board is positioned as such, so that the cams of control cam 35 are positioned in the middle of the circuit board guides (fig. 80).
- Insert the connecting wire of circuit board 36 through the cable chanel.
- Mount connection plug 3 onto the circuit board on the front housing panel (fig. 78).
- Mount the facing panel onto the front housing panel and make sure that both lugs 1 lock fully into place (fig. 77).
- Adjust the synchronizer in accordance with section 5.
- Attach the housing insert and secure with both torx screws.
- Attach the folding cover.
- After a running-in time of 10 - 15 min. check the adjustment of equal forward and reverse stitch length according to section 22 of this service manual.

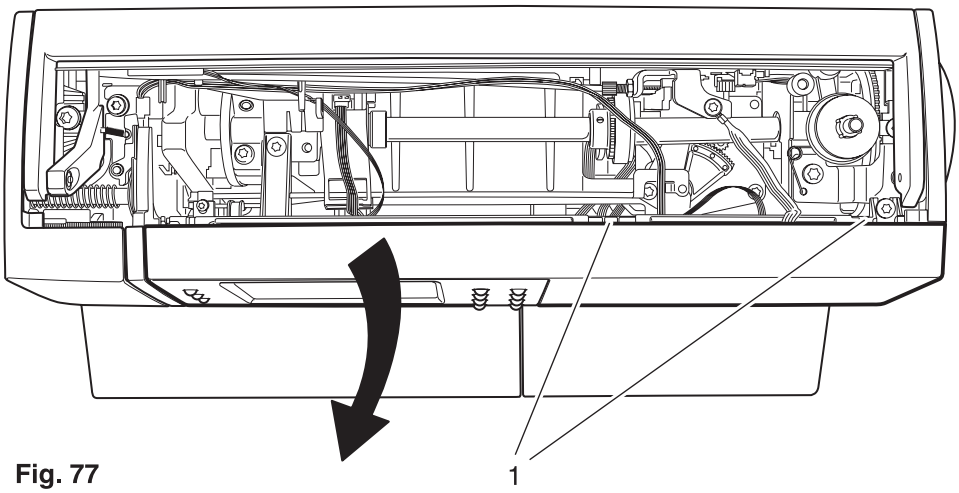

Fig. 77

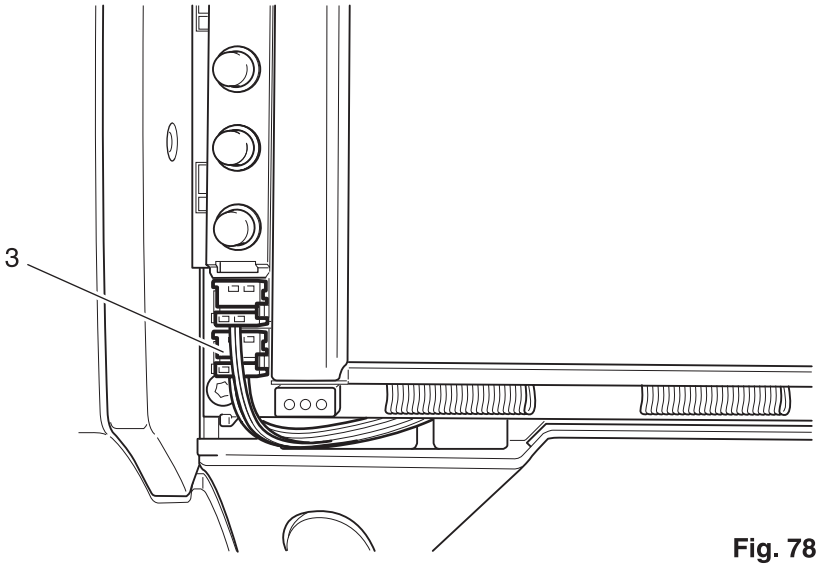

Fig. 78

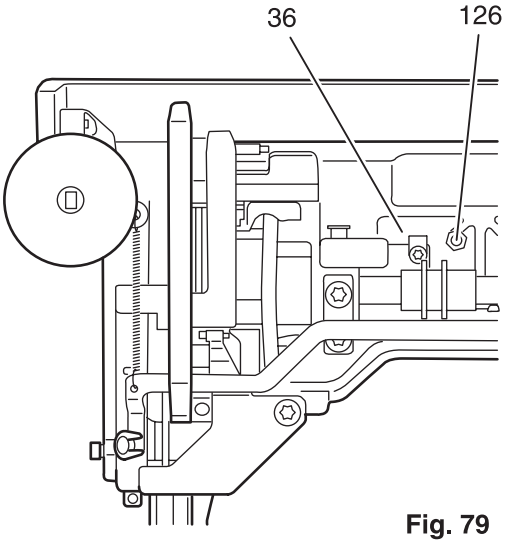

Fig. 79

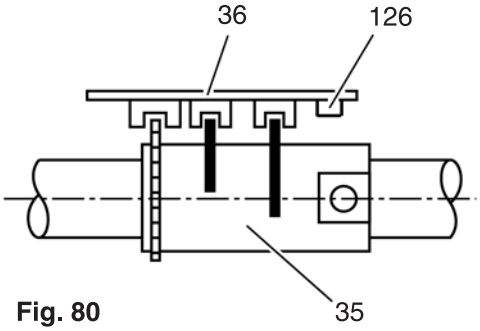

Fig. 80

34. Changing the motor

Note:

The motor is only exchanged complete.

Removal:

- Remove the mains lead from the mains socket and the machine.
- Clap the carrying handle up.
- Loosen fastening screw 11 on the stand cover (fig. 81).
- Remove stand cover.
- Unscrew and remove fastening screw 92 (fig. 82).
- Remove flat-toothed belt 93.
- Remove the motor from the housing to the right.
- Remove both of the motor's power cables (fig. 83).

Fitting:

- Place flat-toothed belt 93 on the handwheel (fig. 82).
- Attach both power cables, paying attention to the plus signs (fig. 83).
- Insert the motor and place the motor pinion in toothed belt 93 (fig. 82).
- Tighten fastening screw 92 slightly.
- Adjust the toothed-belt tension by moving the motor.
- Tighten fastening screw 92.
- Insert the mains lead and trial-run the machine.

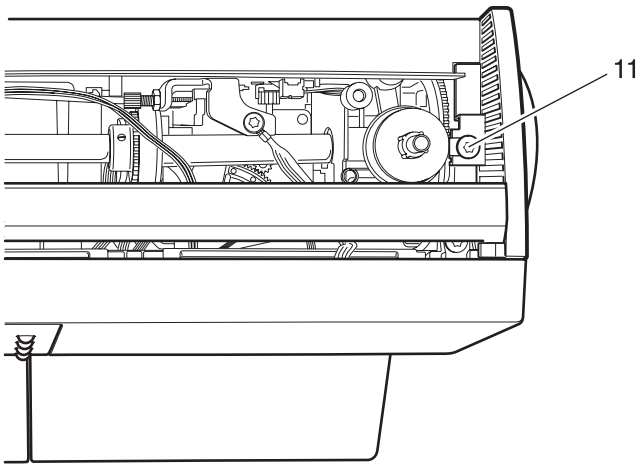

Fig. 81

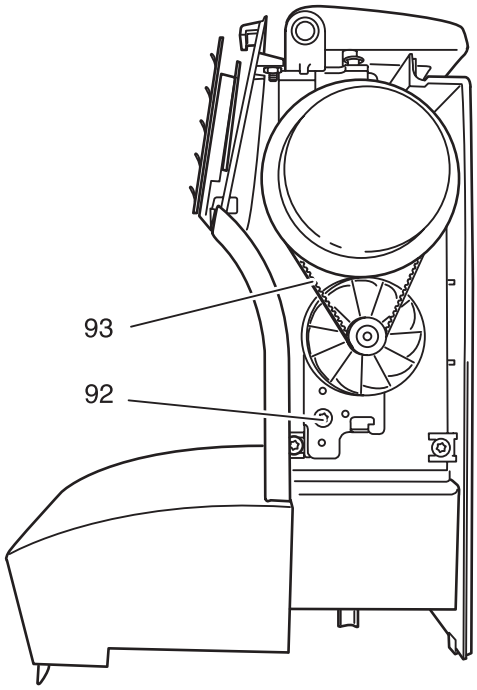

Fig. 82

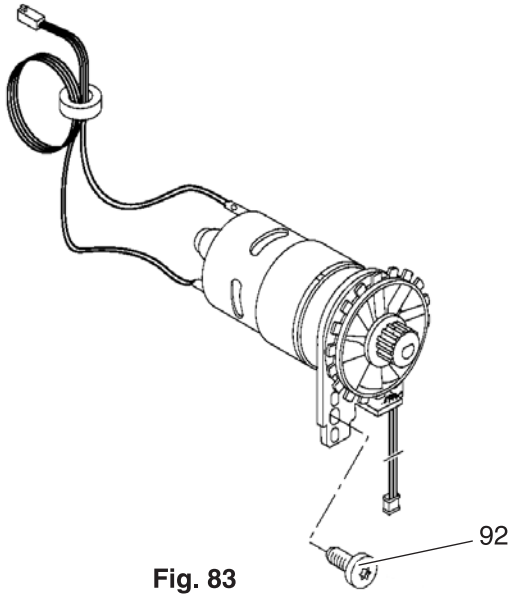

Fig. 83

35. Changing the cable in the foot control

Removal:

- Lift rubber strip 129 and pull it out with its three feet (fig. 84).
- Pull out the two plugs 130.
- Unscrew and remove the four Philips screws 131.
- Remove housing cover 132.
- Remove the rectangular pedal 133 with guide 134 and take out contact spring 135 (fig. 84 and 85).
- Disconnect the right pressure spring 136 (fig. 85).
- Disconnect the right cable 137 with the contact eyelet (fig. 85).
- Press out or pull out demented resistor track 138 (20-K Ohm-potentiometer) upwards with a screwdriver or a pair of pliers.
- Remove cable 139.

Fitting:

- Insert cable 139 in the housing.
- Insert the soldered resistor track 138 fully downwards into the guide and secure it with some adhesive.
- Push the soldered contact eyelet 137 onto the right guide pin.
- Place both cables in the respective guide grooves.
- Place contact spring 135 on the guide pin in the larger right section of pedal 133 (fig. 84 and 85).
- Push pressure spring 136 onto the same guide pin (fig. 85).
- Turn pedal 133 around and push the right spring 136 on the right guide pin of the housing and the left spring 136 on the left guide pin in pedal 133 (fig. 84 and 85).
- First press the pedal a little to the right and then downwards in such a way that contact spring 135 is on the right-hand side of resistor track 138 and not bent (fig. 85).
- Press the pedal further down, as far as it will go; at the same time insert guide 134 in its two open bearings (fig. 84).
- Hold pedal 133 in this position; at the same time replace housing cover 132 and press it firmly on the housing.
- Insert and tighten the four Philips screws 131.
- Insert rubber strip 129 and the two plugs 130.

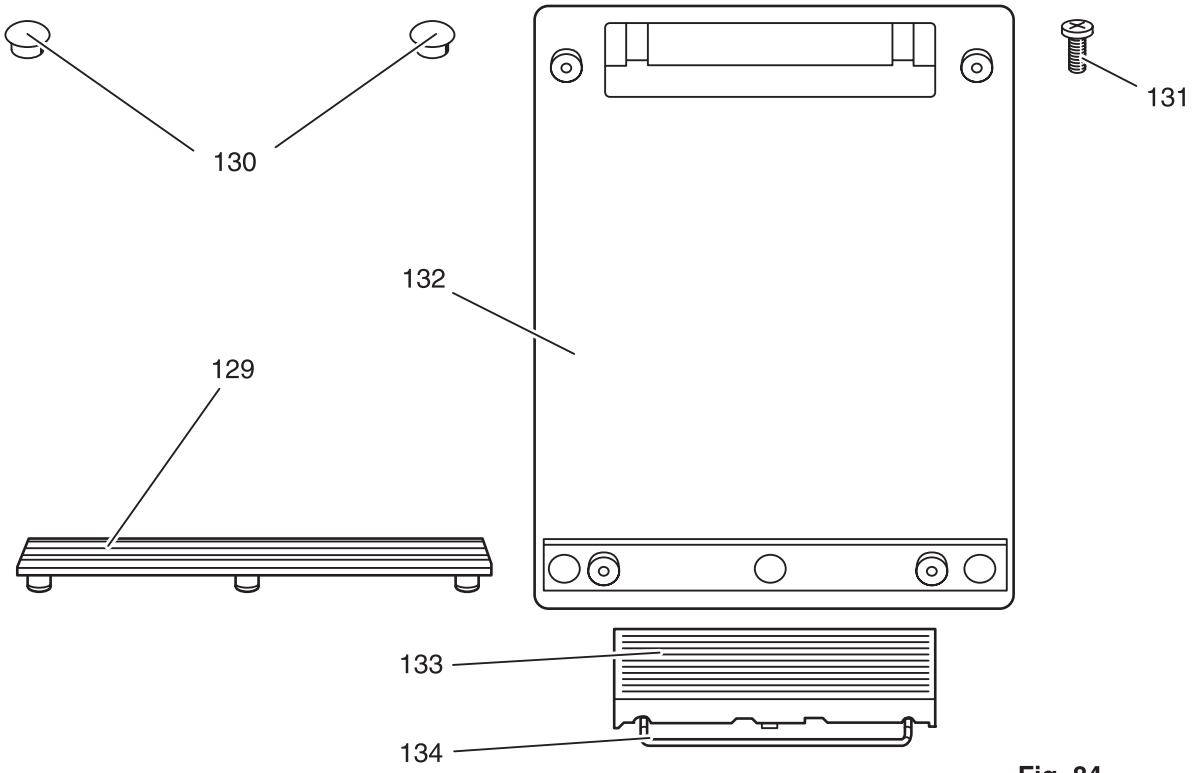

Fig. 84

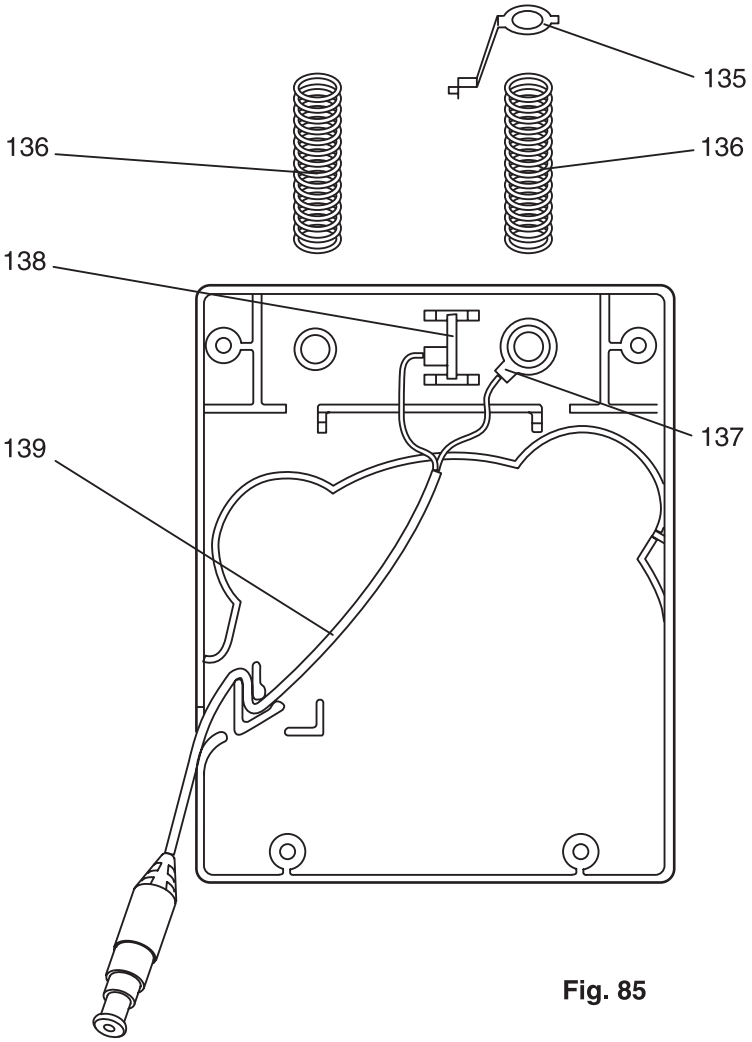

Fig. 85

36. Changing the upper stepping motor

Note:

The stepping motor for sideways needle bar movement must be replaced as a complete unit.

Removal:

- Remove machine's mains plug.
- Remove detachable work support.
- Remove the housing covers as described in this manual.
- Remove retaining washer 140 from bolt 141 (fig. 86).
- Remove the bolt and carrying handle 142.
- Turn out the screws 143 of the SD motor unit (fig. 87a).
- Carefully place the SD motor unit aside.
- Remove circlip 107 on zigzag stepping motor 51 (fig. 87).
- Disengage connecting rod 108 and the toothed segment of zigzag stepping motor 51.
- Unscrew both fastening screws 50.
- Lift zigzag stepping motor 51 upwards out of the retainer in the direction of the arm shaft.
- Remove zigzag stepping motor to the front out of the housing.

Fitting:

- Install zigzag stepping motor 51 in the housing.
- Pull power cable downward.
- Insert and lightly tighten both fastening screws 50.
- Insert the pin of connecting rod 108 in the hole of the toothed segment.
- Attach circlip 107.
- Install the SD-motor unit and place the power cable at the bottom.
- Tighten the fastening screws 143 of the SD-motor unit (fig. 87a).
- Fit carrying handle 142 (fig. 86).
- Insert bolt 141 and attach retaining washer 140.
- Mount the housing covers according to this service manual.

Note:

Having exchanged the zigzag stepping motor for sideways needle movment, the adjustment of the needle in the needle plate hole, section 10 must be repeated.

- Carry out a check of all functions.

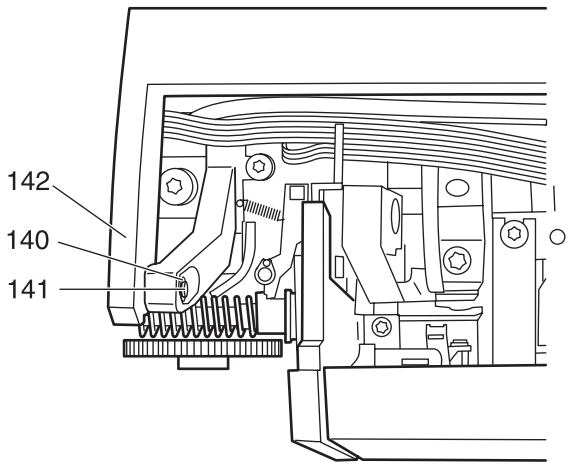

Fig. 86

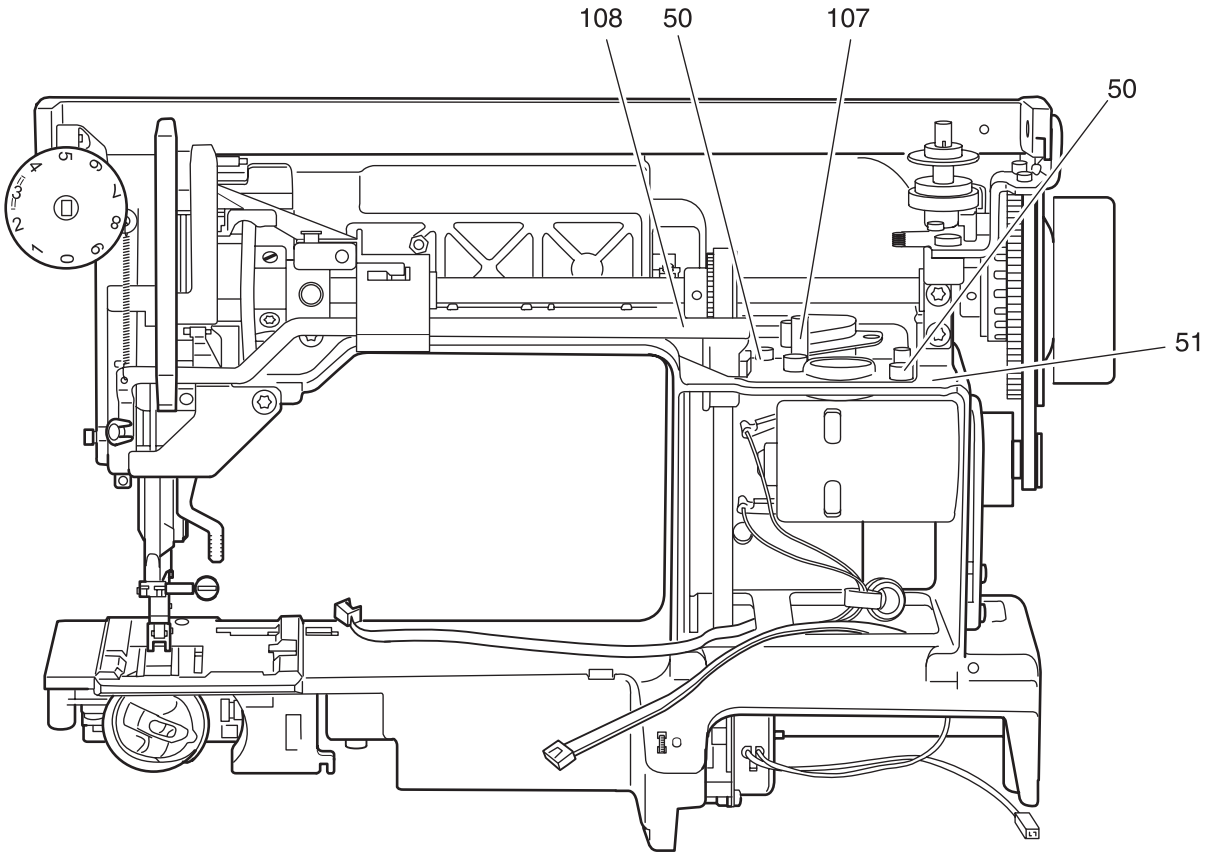

Fig. 87

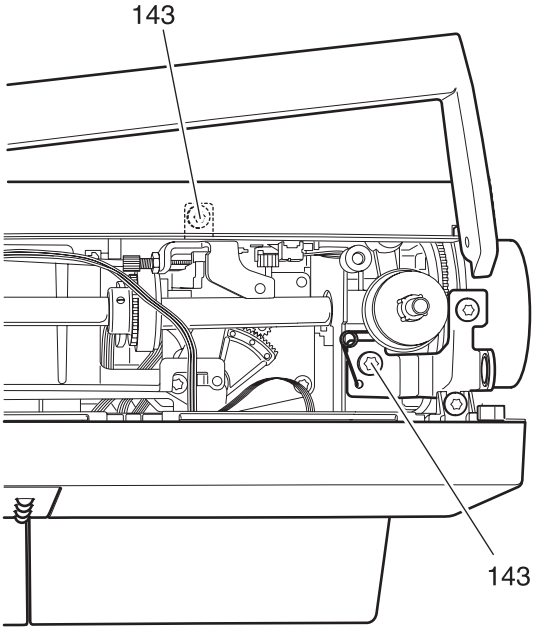

Fig. 87a

37. Changing the lower stepping motor

Note:

The feed stepping motor is only exchanged complete.

Removal:

- Remove the machine's power plug.
- Remove the detachable work support.
- Remove the housing according to the service manual.
- Remove tension spring 3 (fig. 88).
- Unscrew and remove fastening screw 4.
- Remove clamping plate 21.
- Turn the handwheel until the lobe of feed eccentric 5 is positioned at the rear.
- Fold feed regulator 6 downwards and remove this and link 7 from the connecting bar rod to the left.
- Remove slide block 8 with the spring to the right.
- Unscrew and remove both screws 15 of the stepping motor.
- Remove the complete stepping motor 17.

Fitting:

- Insert feed stepping motor 17 complete with the bracket.
- Insert and slightly tighten upper fastening screw 15.
- Insert and slightly tighten clamp spring 144 with the lower screw 15.
- Push slide block 8 with spring onto the bolt and set it in the guide slot in the correct curve radius.
- Check that the slide block moves freely, but without play or binding, in the guide slot.
- Push guide lever 16 complete with stepping motor 17 carefully to the left, until there is a clearance of 0.05 mm between the slide block 8 and the connecting bar 19.
- Tighten screws 15 and check that the slide block moves freely, but without play.
- Push link 7 complete with feed regulator 6 to the right onto the connecting bar pin.
- Insert fastening screw 4 in clamping plate 21 and tighten it a little.
- Shift fulcrum stud 20 laterally so that link 7 and connecting bar 19 still have a slight play and can move freely.
- Tighten screw 4.
- Attach tension spring 3.
- Mount the housing according to the service manual.
- After a running-in time of 10 - 15 min. check the adjustment of equal forward and reverse stitch length according to section 22 of this service manual.

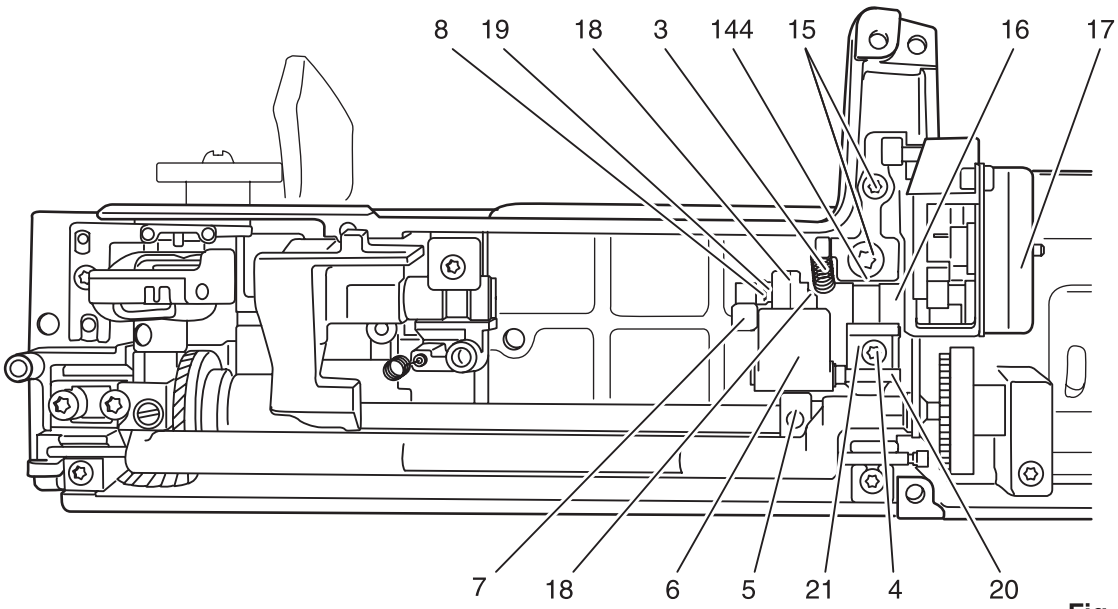

Fig. 88

38. Changing the SD motor unit

Removing:

- Remove the machine's plug from the mains.
- Take off the needle and the presser foot shoe.
- Take off the detachable work support.
- Take off the folding cover.
- Release the screw on the top cover.
- Carefully set down the top cover to one side, complete with sewing light and lead (fig. 89).
- Release screw 145.
- Remove the sewing lamp with lead from the guide.
- Take off the top cover.
- Remove the two torx screws from the housing insert.
- Remove the housing insert.
- Remove screw 11 from the stand lid (fig. 90).
- Raise both lugs 1 slightly and remove the facing panel in the direction of arrows.

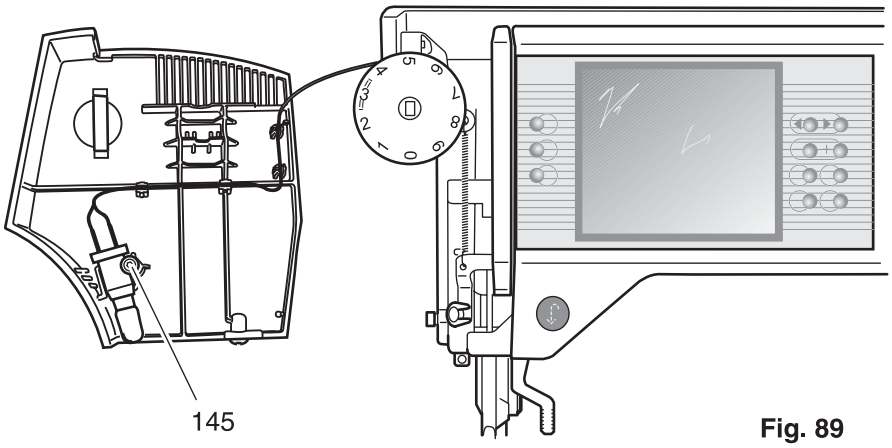

Fig. 89

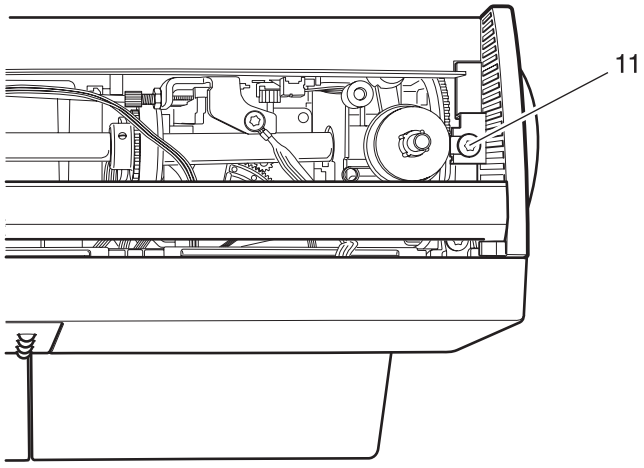

Fig. 90

- Pull the plug 21 from the circuit board (fig. 91).
- Loosen screw 25 (fig. 92).
- Press the rear housing shell back until the rearmost screw 143 is visible.
- Remove the two screws 143.
- Disengage the carrying handle 142.
- Remove screw 146 from the Bowden cable's clamping plate (fig. 93).
- Disengage the Bowden cable at the presser bar guide.
- Remove the bracket 147complete (fig. 92).

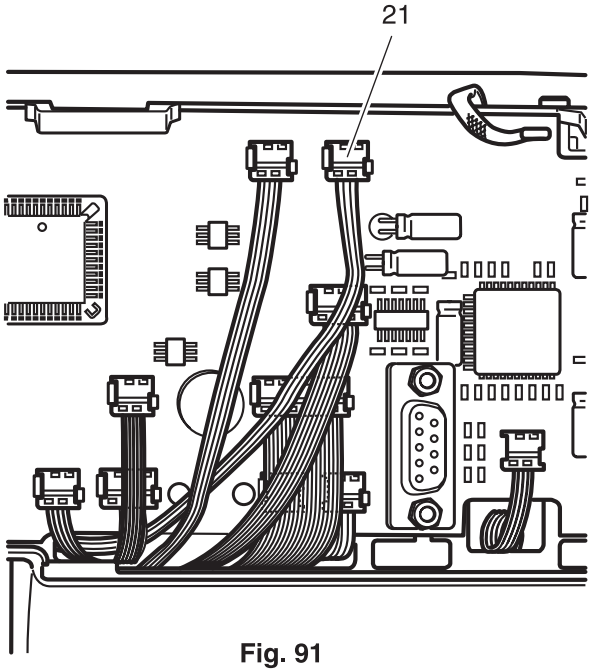

Fig. 91

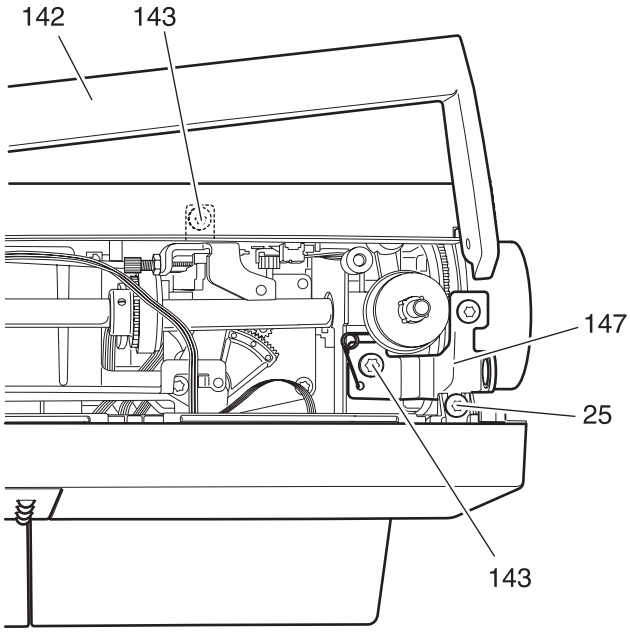

Fig. 92

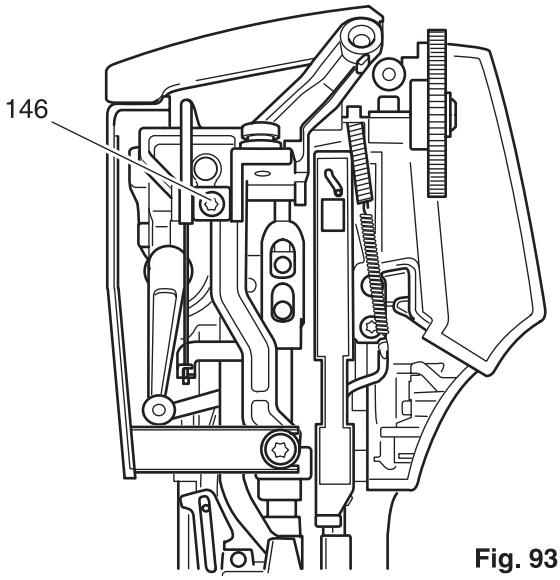

Fig. 93

- Release locking nut 48 (fig. 94).
- Remove the threaded piece 49 from the bracket 147.
- Take off the lock washer 148.
- Take the toothed rocker 149 with magnet off the pin.
- Take the Bowden cable out of toothed rocker 149 and bracket 147.
- Remove the two screws 150 and remove the stepping motor 151.

Installation:

- Insert the Bowden cable in bracket 147 and toothed rocker 149.
- Fit the toothed rocker 149 on the pin.
- Fit the lock washer 148.
- Screw the threaded piece 49 into the bracket 147.

Basic setting of circuit boards:

- Slacken off screw 152 slightly, slide the circuit board until the pin are located at the center of the slot (fig. 95).
- Tighten screw 152.
- Insert the stepping motor 151 and tighten the screws 150 slightly.
- Release the screws 150 and press the stepping motor 151 against the toothed wheel with about 2-3 N.
  In this way, adjust the play between the two toothed wheels.
- Tighten the two screws 150.

- Fit the plug sockets 21 on the circuit board (fig. 91).
- Place the entire bracket 147 on the housing shells (fig. 92).

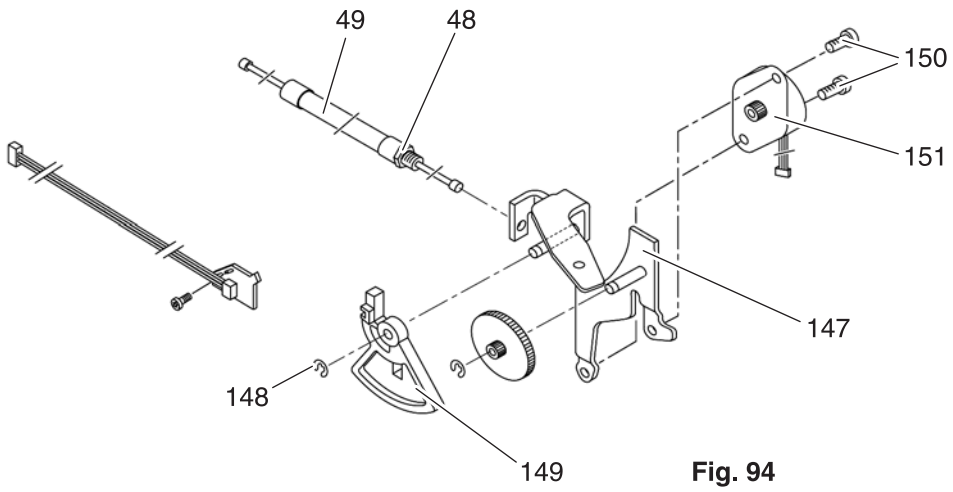

Fig. 94

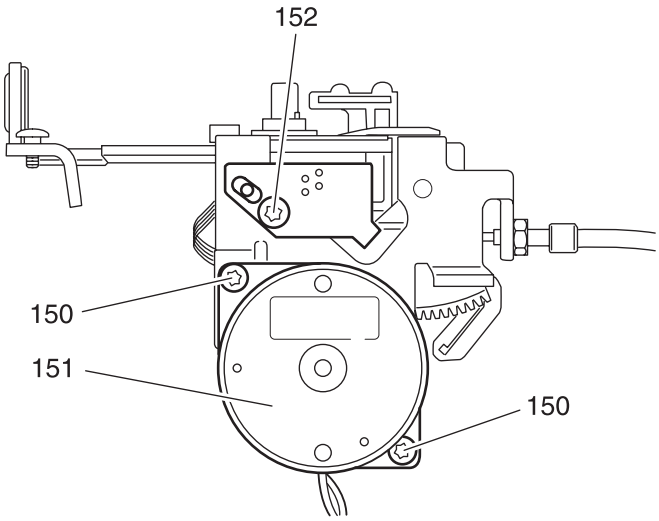

Fig. 95

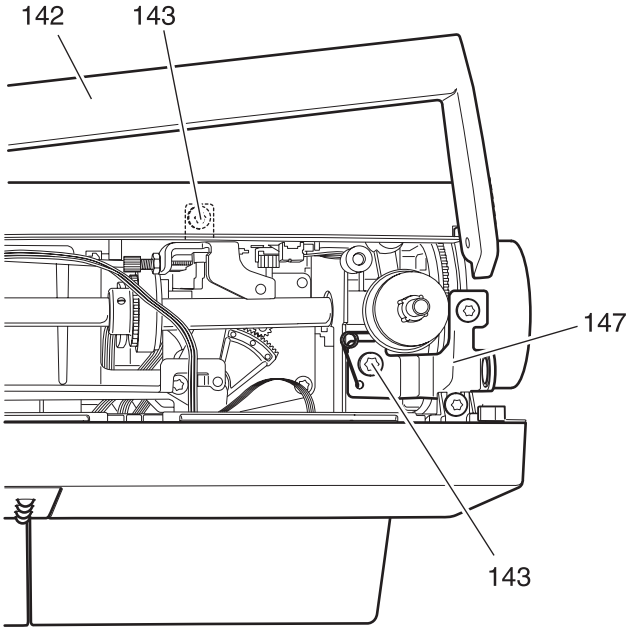

Fig. 92

39. Adjusting the toothed rocker

Note:

Only perform this adjustment if absolutely essential.

Principle:

In the „sewing position“, there must be 0.5 - 0.8 mm clearance between the toothed rocker 149 and the bracket 147 (Fig. 96).

Check:

- Plug the machine’s mains plug into the mains.
- Switch on the machine.
- Press the „Main menu“ key.
- Press the icon for utility stitches.
- Select the straight stitch.
- Press the icon for „More options“.
- Press the icon „Raise presser foot“.
- Confirm the input with the „OK“ key.
- Press and release the foot control.
- Check the clearance of 0.5 – 0.8 mm between the toothed rocker 149 and the bracket 147.

Adjustment:

- Switch off the machine.
- Slacken off screw 152 slightly on the circuit board (Fig. 95).
- Reposition the circuit board slightly and tighten screw 152.
- Monitor by following the procedure described under „Check“.
- Switch off the machine and repeat the adjustment procedure until the clearance is correct.
- Tighten screw 152.

Cross-check:

Proceed as described under „Check“.

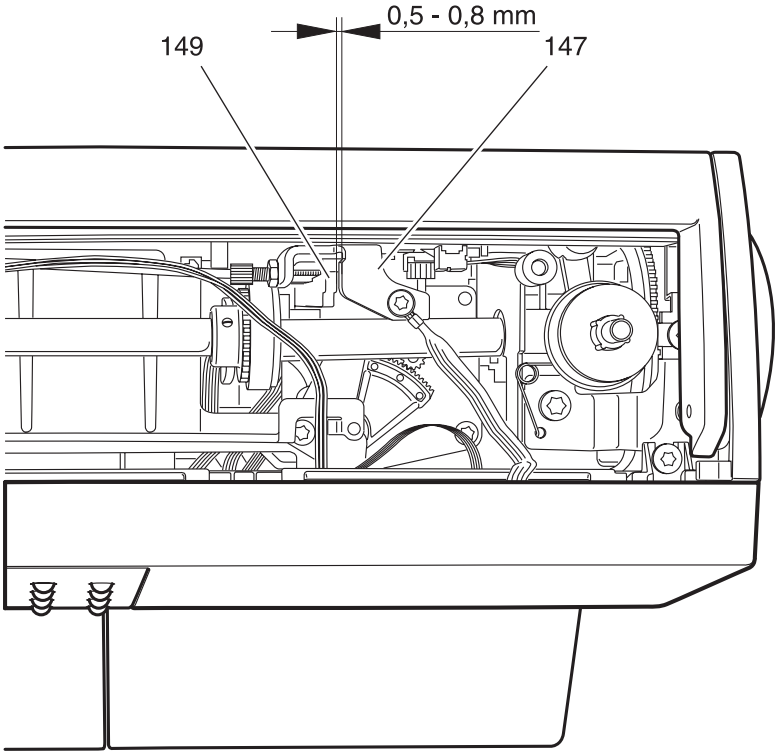

Fig. 96

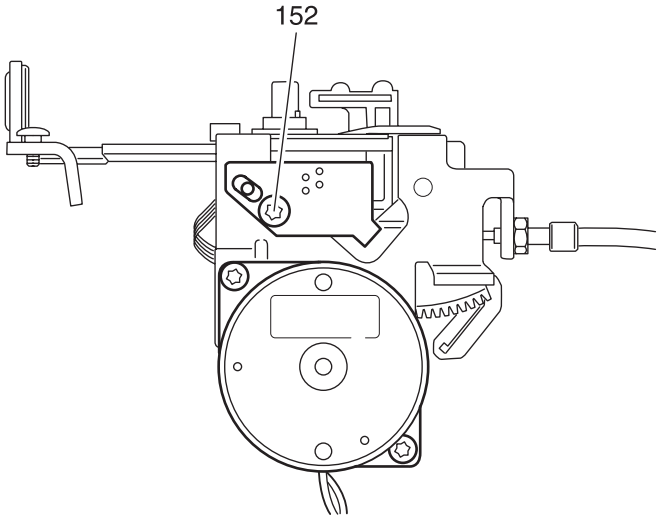

Fig. 95

- Engage the Bowden cable at the presser bar guide.
- Position the Bowden cable's clamping plate and secure with screw 146 (fig. 97).
- Insert the carrying handle 142 in the bracket (fig. 98).
- Fit the complete bracket.
- Tighten the two screws 143.
- Tighten screw 25.
- Position the flat cable correctly in the cable guides.
- Fit the stand cover and secure with screw 11 (fig. 99).
- Adjust the free motion foot height as described in shell 9 of the adjustment and repair manual.
- Mount the facing panel onto the front housing panel and make sure that both lugs 1 lock fully into place.
- Insert the housing insert and secure.
- Fit the complete top lid.
- Check the operation of SD motor unit.

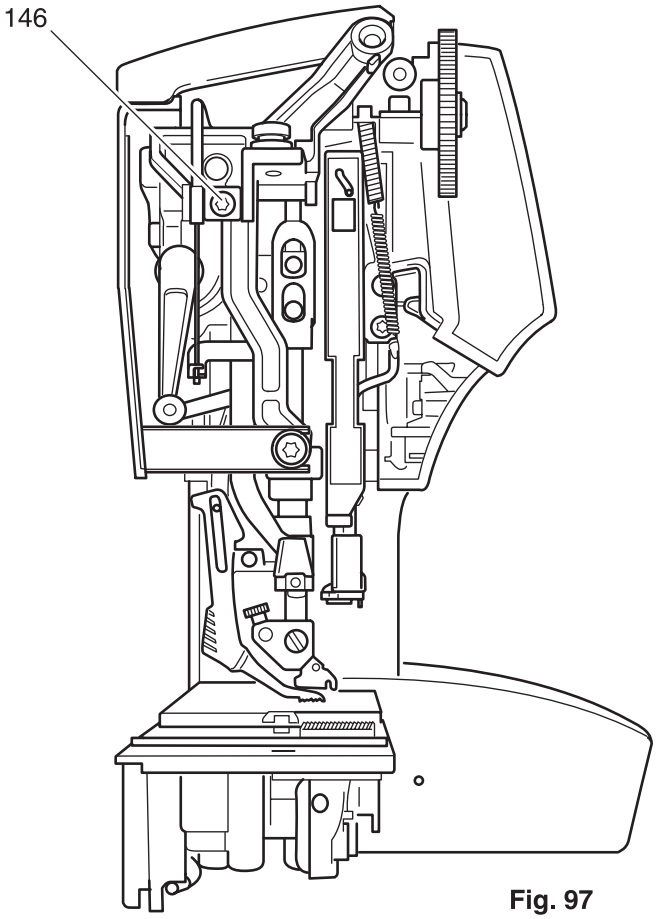

Fig. 97

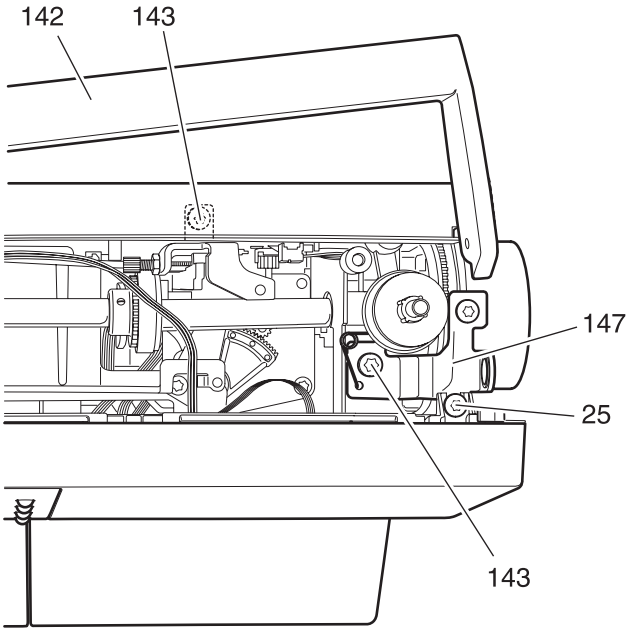

Fig. 98

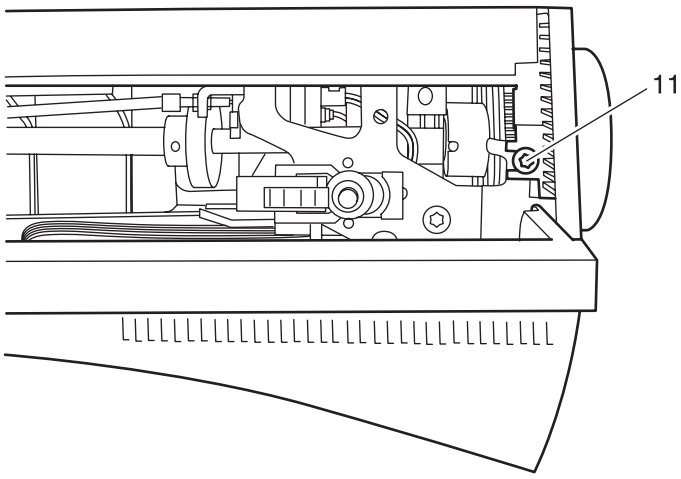

Fig. 99

40. Changing the buttonhole sensor

Note:

The buttonhole sensor must be replaced as a complete unit.

Removal:

- Disconnect the machine lead cord.
- Remove the needle and the presser foot.
- Remove the detachable work support.
- Remove the housing covers as described in this manual.
- Remove the connecting plug 15 from button hole sensor (fig. 74).
- Remove Seeger circlip ring 153 (fig. 100).
- Remove lowering lever 154.
- Cut off cable clip 155 with a knife (fig. 101).
- Remove buttonhole sensor 156 complete with spring (fig. 100).

Refitting:

- Install buttonhole sensor 156 complete with spring.
- Place the flat cable into the housing of the machine.
- Insert cable clip 155 from the top and pull it together fig. 101).
- Cut off the protruding end of cable clip 155.
- Fit lowering lever 154 (fig. 100).
- Mount Seeger circlip ring 153 and seal lowering lever.
- Mount connection plug 15 onto the circuit board (fig. 74).
- Refit the housing covers as described in this manual.
- Carry out a function check.

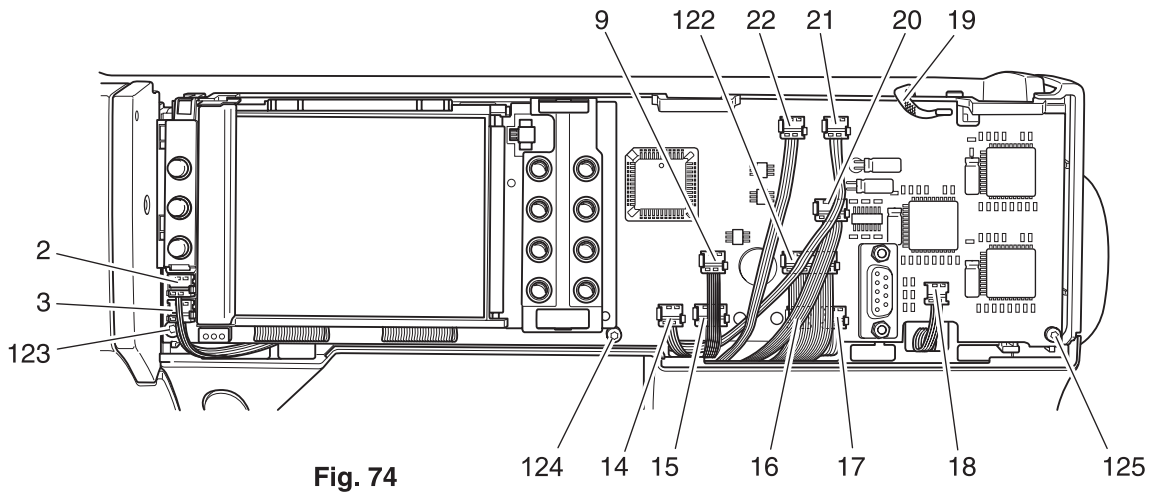

Fig. 74

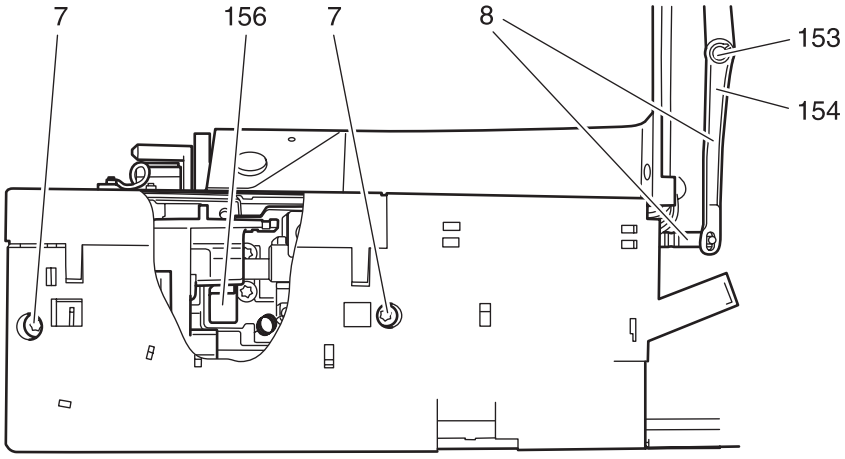

Fig. 100

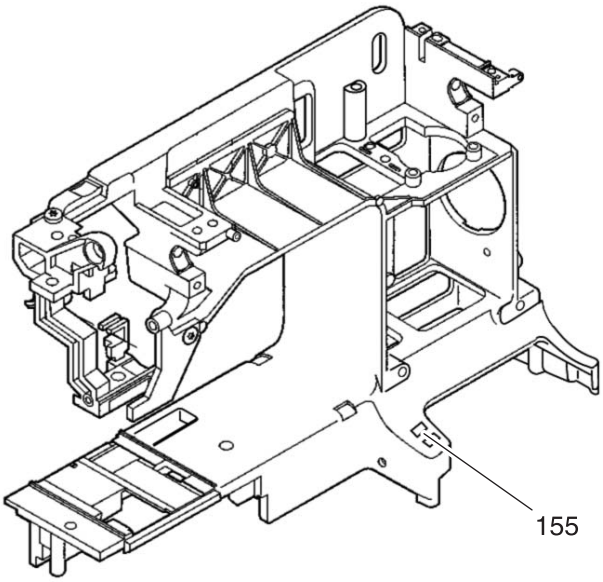

Fig. 101

41. Changing the thread monitor with free-arm cover

Note:

The thread monitor is only exchanged complete with the free-arm cover.

Removal:

- Remove the machine's mains lead.
- Remove the needle and presser foot.
- Remove the folding cover.
- Unscrew and remove both torx screws of the housing insert.
- Remove the housing insert.
- Raise both lugs 1 slightly and remove the facing panel of the front housing panel (fig. 102).
- Place the machine on its back.
- Unscrew and remove the three screws in the base plate.
- Tilt the bast to the front and remove three connection plugs 4, 5 and 6 (fig. 103).
- Unscrew and remove both fastening screws 7 of the free-arm cover (fig. 104).
- Bring the feed-dog lowering mechanism into its normal working position.
- Disengage both feed regulators 8 using a small screwdriver.
- Remove the cable clip.
- Remove connection plug 9 from the circuit board of the front housing panel and pull the cable
- downward (fig. 105).
- Remove the free-arm cover with the thread monitor from the housing to the left.

Fitting:

- Install the new free-arm cover with thread monitor and secure with both fastening screws 7 (fig. 104).
- Bring the feed-dog lowering mechanism into its normal working position.
- Engage both feed regulators 8.
- Place the cable, using a spring hook, between the motor and the housing.
- Mount connection plug 9 onto the circuit board of the front housing panel (fig. 105).
- Attach the cable clip.
- Mount three connection plugs 4, 5 and 6 onto the circuit board of the base plate (fig. 103).
- Fold the base plate to the machine and secure with the three fastening screws.
- Mount the facing panel onto the front housing panel.
- Insert the housing insert and secure with both torx screws.
- Attach the folding cover.
- Attach the mains lead.
- Carry out a test of the thread monitor with an empty and a full bobbin.

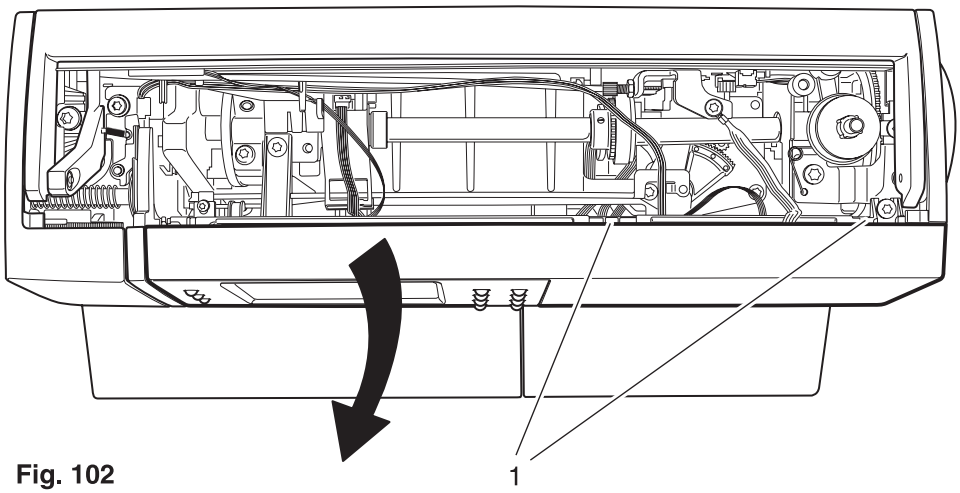

Fig. 102

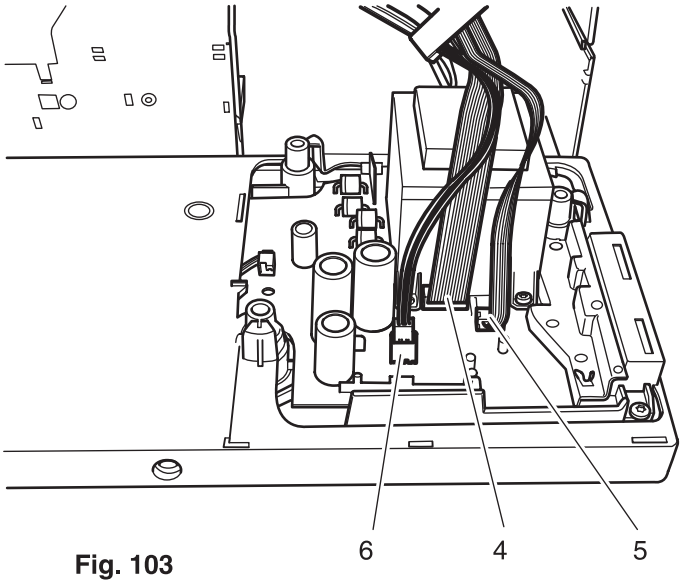

Fig. 103

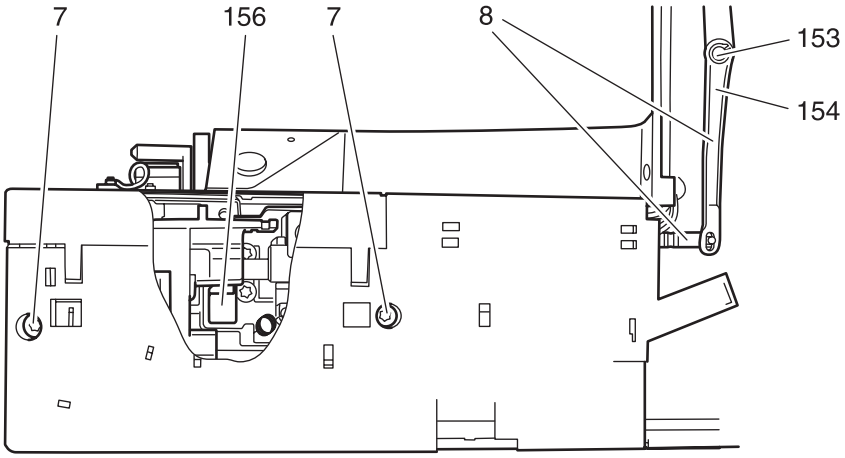

Fig. 104

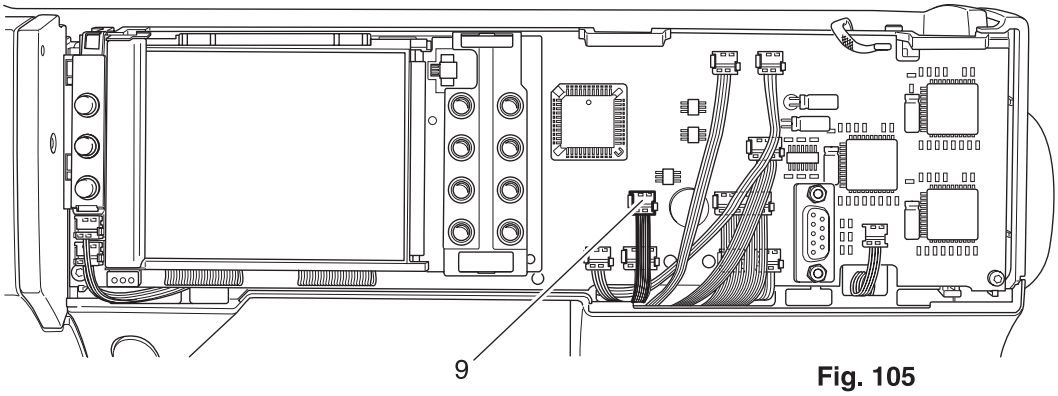

Fig. 105

42. Changing the needle threader

Note:

The needle threader is only exchanged complete with the threader bar frame.

Removal:

- Remove the machine's mains lead.
- Remove the needle and the presser foot.
- Press threader key 67 down completely and keep it pressed (fig. 106).
- Using a small screwdriver, raise bracket 157 of threader bar frame 158 slightly.
- Remove the complete threader bar frame downward from threader bar 159.

Fitting:

- Push the new threader bar frame together with the needle threader onto the threader bar, until bracket 157 clicks back into place.

Cross-check:

- Insert a new needle Nm 70.
- Move the needle threader up and down by pressing threader key 67.
- Carry out a visual check of the position of the needle-threader prong in the needle eye.
- If necessary, readjust the position according to section 17 of the service manual.

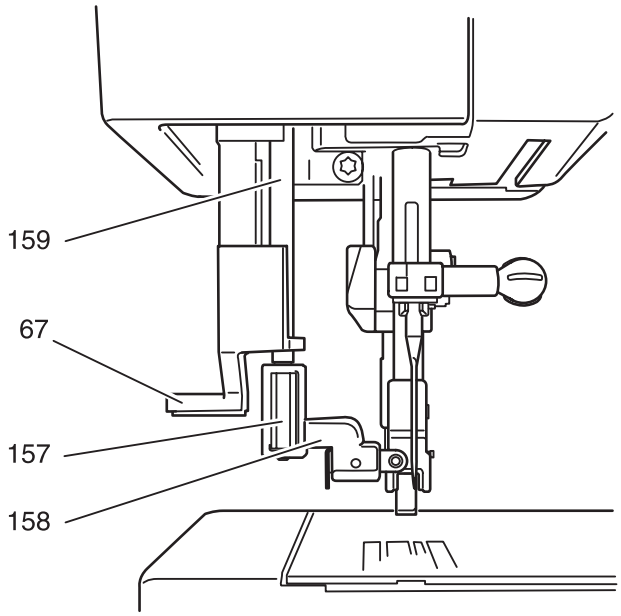

Fig. 106

Upgrade of the performance 2056

The performance 2056 is preset by the manufacturer to the language of the country in which it is sold.

The customer can easily set a different language.

The machine can likewise always be updated to the latest software status.

This ensures that the performance 2056 will never be outdated.

43. Upgrade from a PC via a serial interface on the machine

The machine must be connected to a PC via a suitable cable.
Switch on the machine.
The machine now waits for data from the serial interface.
Start the „Pfaff Firmware Loader 2056.exe“ software on the PC.

Brief instructions for carrying out the upgrade procedure:

1. Connect the sewing machine to the PC.
2. Switch on the machine while pressing the „pattern start“ button at the same time.
   (The machine now waits for data; it can only be retrieved from this status by switching it off.)
3. Start the „Pfaff Firmware Loader 2054.exe“ program on the PC.
4. Click on the item „Select Firmware“ under „File“ and select the desired Firmware file in the appearing menu.
5. In the menu „Settings“ you can select the serial port of the PC and the baud rate (loading speed).
6. Click on „Update sewing machine“ under „File“.
7. The PC now tries to set up a connection with the machine.
   The display on the machine doesn’t change during the upgrade procedure.
   If the connection has been established between the PC program and the machine, a ‚state‘ message is displayed in the „Progress information“ window and the „Count sent“ counter shows the transferred data blocks.
   Progress information:
   If no connection has been established, an error message will appear on the PC after a short time.
8. Wait until the upgrade procedure is complete.
   The sewing machine program starts automatically.
   If the procedure was started and no connection was made, the machine can only be operated again by switching it off.
   If the upgrade procedure was interrupted or disturbed during a serial transfer and the programming aborted, the machine will have no program.
   The boot procedure may be started again after the machine has been prepared again for upgrading.
   Serial booting requires a BIOS version number higher than 01.01.02.

44. Calibrating the Touch panel

Note:

The Touch panel is correctly calibrated by the manufacturer and needs only to be recalibrated if absolutely essential.

Adjustment:

- Press the **„More options“** button and hold it pressed.
- Switch on the machine.
- Dots inside a circle appear in the top left and right corners, as well as in the lower right corner.
- The dot inside the flashing circle must be pressed with the pin until a beep sounds and the next circle starts to flash.
- Once all dots have been confirmed, the screen is closed and these values are transferred to the internal non-volatile memory.

Special features:
Adjustment must be carried out completely (obligatory).
The process can only be interrupted by switching off the machine.
The Calibration function can also be called up via the **„context menu“**.

45. Calibrating the knee lift potentiometer

Note:

The knee lift potentiometer is correctly calibrated by the manufacturer and needs only to be recalibrated if absolutely essential.

Requirement:

The knee lift potentiometer is adjusted to its limit points, which are stored by touching the **„OK“** button.

Adjustment:

- Insert the knee lift in the guide bush of the base plate.
- Switch on the machine.
- Touch the **„Info“** button until the **„Context menu“** appears.
- Press the lower cursor button to browse through the display for the Machine test.
- Touch the **„Machine test“** button.
- Enter the code 254.
- Confirm the input with the **„OK“** button.
- Touch the **„Adjustment aids“** button.
- Touch the **„Presser foot lifter adjustment“** button to enter the calibration program.
- Store the lower value located by touching the **„OK“** button.
- Press the knee lift to the right and hold it in position; simultaneously touch the **„OK“** button to store the upper value likewise.
- Release the knee lift.
- Make a visual test and confirm with the **„OK“** button.
- The values are permanently stored by confirming with the **„save“** button.
  The touch Screen shows now the welcome screen.

Special features:
The settings detected are stored in the machine.
If these adjustment values are not found, default values are used and the height of the presser foot will not correspond to the specifications.

Important special functions of the performance 2056

46. Display's contrast setting

Note:

The Display contrast is correctly adjusted by the manufacturer and needs only to be recalibrated if absolutely essential.

Basic adjustment:

If the **„Info“** button is pressed when the machine is switched on, the contrast adjustment menu is opened.
The contrast of the display can be adjusted by continuous pressing of the **„+“** or **„-“** button.
If the Display contrast is too bright, adjust with the **„+“** / too dark use the **„-“** button.
The setting is stored when the touch panel is touched inside this menu window or if you exit via the **„main menu“** button.

Adjustment from main menu:

- Switch on the machine.
- Touch the **„Info“** button until the **„Context menu“** appears.
- Press the lower cursor button to browse through the contrast.
- Touch the **„contrast“** button.
- Adjust the contrast with the **„+“** or **„-“** button or use the arrows on the touch screen.
- Touch the contrast window outside the arrows to close it and save the adjustment.
- Press the **„More options“** button to go back to the main menu.

Special features:
If you hold the „Info“ button when the machine is switched on, the contrast is automatically set to 12.

47. Version number and status

The version number of the machine software and the BIOS (Basic Input Output System) can be called up via the „Context menu“.

PFAFF
Kl. 2056 - Versions
Firmware: 00.01.06 / 29.06.2004
BIOS: 01.01.02 / 29.11.2002

Note:

Firmware: is the version with date of the machine program that is actually loaded.

BIOS: is the version with date of the machine's basic program in the non-erasable memory.

48. Programmed patterns

This is a selection of special patterns for purposes of adjusting the sewing machine.

49. Options for messages

- Switch on the machine.
- Touch the **„Info“** button until the **„Context menu“** appears.
- Touch the **„Options for messages“** button.
- Select your settings and then press the **„OK“** button.
  The settings are saved.

50. Erasing machine memory

If the **„0-9“** button is pressed when the machine is switched on, the entire internal memory is erased.
This erases all machine settings as well as stored pattern sequences.
Now the machine is set to a factory setting.

51. Demonstration (Pattern flow)

- Switch on the machine.
- Touch the **„Info“** button until the **„Context menu“** appears.
- Press the lower cursor button to browse through the display for the Machine test.
- Touch the **„Machine test“** button.
- Enter the code 254.
- Confirm the input with the **„OK“** button.
- Touch the **„Pattern flow“** button.
  By pressing on the „**Pattern flow**“ button, the machine is switched to the demo mode in which all patterns are automatically selected („display-window demonstration“).
  The demo mode is also active when the machine is restarted.
  This status can only be switched off permanently here.
- To interrupt demo, press the **„Main menu“** button; it is now possible to sew with the machine.

Machine test

The machine test menu is reached via the **„Context menu“** by entering an access code (254).

Only those tests which can be performed by the software or have to be controlled by it are described here.

A test should only be launched if the involved assemblies have already been successfully tested.

<u>For example:</u>

The machine motor must be turning in order to test the amount of thread on the bobbin; the machine motor should therefore be tested before testing the amount of thread on the bobbin.

52. Test program

The following accessories must be available for conducting the test:
Foot control, buttonhole guide, full bobbin case, knee lift.

If a machine check is not possible, the operator is requested to perform a visual check.
The message visual check and the following text are displayed:

OK = button **„+“**
ERROR = button **„-“**
End = **„i“** (also available in the „**Full test**“ mode)

The **„+“** button serves as the **„OK“** button and the **„-“** button serves as **„Error“** button.
The current test can be interrupted with the **„i“** button.

If the „**Full test**“ mode is activated, only the next test will be automatically executed after pressing the **„Ok“** or **„Error“** button.

All test results are recorded.

There are two ways of testing the machine with the aid of a test program:

I. Direct testing of the malfunctioning electronic assemblies.

II. Checking all assemblies in sequence, recording the results and displaying the test results on the screen.

Test start

53. Display

The display memory is first checked.
Irregular patterns are displayed during this check.
Afterward, every 2nd pixel appears alternately on the display.
An evaluation window for visual check is displayed after completion of the test.

<u>Please press now the relevant buttons:</u>

either	button **„+“ = OK (test was successful)**
or	button **„-“** = **ERROR (test was not successful)**
plus	button **„i“** = **End (end of test with possibility to go to the next test)**

The current test can be interrupted with the **„i“** button.

If the „**Full test**“ mode is activated, only the next test will be automatically executed after pressing the **„+“** or **„-“** button.

54. Buttons

The machine buttons are represented on the screen.
They are bright at the start of the test and are shown as black when the buttons (not the push-buttons) are pressed.

The operator is requested to operate the buttons in any chosen order.
Don't press the buttons simultaneously.
The test is completed and the menu will be closed after every button has been pressed.
Press on the display to reject the results of the test.
If the „**Full test**" mode is activated, the next test will be automatically executed after completion of the test.

55. Touch Panel

The indicated positions must be pressed with a blunt object in order to align the target and actual markers.
Don't use a sharp-edged object. It could damage the touch panel.

An evaluation window for visual check is displayed after completion of the test.

Please press now the relevant buttons:

either	button **„+" = OK (test was successful)**
or	button **„-"** = **ERROR (test was not successful)**
plus	button **„i"** = **End (end of test with possibility to go to the next test)**

The current test can be interrupted with the **„i"** button.

If the „**Full test**" mode is activated, only the next test will be automatically executed after pressing the **„+"** or **„-"** button.

56. Signal generator / loudspeakers

All audio outputs must be tested via the „all" button.

The test is completed after all audio outputs have been actuated.
An evaluation window for visual check is displayed after completion of the test.

Please press now the relevant buttons:

either	button **„+" = OK (test was successful)**
or	button **„-"** = **ERROR (test was not successful)**
plus	button **„i"** = **End (end of test with possibility to go to the next test)**

The current test can be interrupted with the **„i"** button.

If the „**Full test**" mode is activated, only the next test will be automatically executed after pressing the **„+"** or „-" button.

57. Foot control

The foot control is a variable resistor whose value is measured by an analogue method.
When not in use, its value is „infinite“.
If the foot control is being pressed, the operator is requested to release it.

Press the push-button **„Start“**.
When the operator is requested, the foot control must be pressed or released.
A number which indicates the analogue measurement appears in the display.
Each of the „off“ (0) and „max.“ (> 140) marks must be reached twice; otherwise no OK will be issued.

Press the button **„i“** = **End** **(end of test with possibility to go to the next test)**

The current test can be interrupted with the **„i“** button.

If the „**Full test**“ mode is activated, the next test will be automatically executed after completion of the test.

58. Stepping motors

The stepping motors are grouped together according to function; each group is tested separately.
The stepping motors for the selected group are normalised in succession and moved at their maximum stroke.
The stepping motors move to the limit positions. The first time they also move to the middle position.
Then they move 2 times at their maximum stroke with max. speed and stop in the middle position.

The individual dialogues are:

Sewing unit:
The zigzag motor and the feed stepping motor don’t have a limit switch.
The operator is requested to carry out a visual check.
Press the push-button **„Start“**.
An evaluation window for visual check is displayed after completion of the test.

Please press now the relevant buttons:

either	button **„+“** = **OK** **(test was successful)**
or	button **„-“** = **ERROR** **(test was not successful)**
plus	button **„i“** = **End** **(end of test with possibility to go to the next test)**

The current test can be interrupted with the **„i“** button.

If the „**Full test**“ mode is activated, only the next test will be automatically executed after pressing the **„+“** or **„-“** button.

Presser foot unit:
Stepping motor units with limit switch (presser foot unit) have to reach the limit (i.e. position 0 = normal position) and leave it during operation. Otherwise an error message will be issued.
The status of the limit switches is displayed.
Press the push-button **„Start“**.
An evaluation window (**OK** or **Error**) is displayed after completion of the test.
Press the button **„i“** = **End** **(end of test with possibility to go to the next test)**

The current test can be interrupted with the **„i“** button.

If the „**Full test**“ mode is activated, the next test will be automatically executed after completion of the test.

Presser foot lift

The machine moves to the corresponding positions when the appropriate buttons are pressed:

- Top position [8 mm above needle plate]
  The limit switch must be reached.
- Center position [5.3 mm above needle plate]
- Lowered position [Foot resting on needle plate]
- Release lifter [10,3 mm above needle plate]
  The manual lifter must be released
- Knee lift [Presser foot follows the knee lift]

The positions can be selected manually.
After pressing the knee lift button, the presser foot must follow the movement of the knee lift (visual check).

Please press now the relevant buttons:

either	button **„+“ = OK (test was successful)**
or	button **„-“ = ERROR (test was not successful)**
plus	button **„i“ = End (end of test with possibility to go to the next test)**

The current test can be interrupted with the **„i“** button.

If the „**Full test**“ mode is activated, the next test will be automatically executed after acknowledgement of the visual check.

59. Buttonhole control

The buttonhole gauge consists of a measuring rail and a dual-track forked light barrier.
The 90° out-of-phase signals generated when the measuring rail is moved are counted by the hardware, with the total running up or down depending on the direction of movement.

The operator is requested to insert the measuring rail to the limit.
The measuring rail must be pulled out by pressing the **„START“** button.
The counter reading is displayed in the form of a number.
If a value of min. 110 is not reached, an error message will be issued.
An evaluation window (**OK** or **Error**) is displayed after completion of the test.
Press the button **„i“ = End (end of test with possibility to go to the next test)**

The current test can be interrupted with the **„i“** button.

If the „**Full test**“ mode is activated, the next test will be automatically executed after completion of the test.

60. Synchronizer

The synchronizer consists of two forked light barriers, which scan two coded discs supplying four different signals per revolution of the machine:
The handwheel must be turned twice by the operator manually, with a connected sewing mechanism.
All possible combinations of the synchronizer sensor must be covered during the process.
The revolutions counter is reduced in the display.
By way of a visual check, a segment consisting of bitmaps appears on the screen to indicate the current position of the sensor.
The current position area is displayed in black (although the following illustration shows all the areas in different colors, only the actual area will be displayed in black during the test, for example: the red area is displayed in black while the other areas are white).

Synchronizer

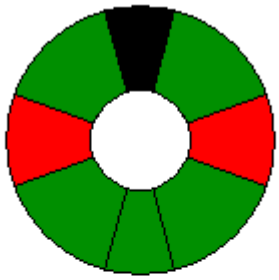

OK

End = key „i“

3 * turns of hand wheel

Black: stop area for „needle raised“
Red: no stepping motor for sewing operation is allowed to move here
Green top: area for the zigzag stepping motor
Green bottom: area for the feed stepping motor

The change-over from red to green is the trigger signal for the corresponding stepping motor.

An evaluation window (**OK** or **Error**) is displayed after completion of the test.
Press the button **„i“** = **End** **(end of test with possibility to go to the next test)**

The current test can be interrupted with the **„i“** button.

If the „**Full test**“ mode is activated, the next test will be automatically executed after completion of the test.

61. Machine motor

If the foot control has already been operated, the operator will be requested to release it again.
The speed indicator consists of a forked light barrier, which scans a toothed wheel located on the motor shaft.
The flanks of this signal are measured as a function of time and counted.
The actual speed and the target speed are displayed in the form of numbers.

„Speed test / Stop needle raised“

The operator is requested to press the foot control right down.
The machine slowly increases the target speed (the speed values are displayed), up to the max. speed.
The machine then halts in the top position.

An evaluation window (**OK** or **Error**) is displayed after completion of the test.

The current test can be interrupted with the **„i“** button.

Press now the push-button **„Continue“**.

Needle stop down

The needle stop positions are combinations of the values from the synchronizer and the speed indicator.

The operator is requested to press the foot control.
The sewing machine slowly performs one revolution and halts in the lower position.

An evaluation window (**OK** or **Error**) is displayed after completion of the test.

The current test can be interrupted with the **„i“** button.

Press now the push-button **„Continue“**.

62. Bobbin thread monitor

The bobbin thread is monitored by a light barrier.
The light only passes though a bobbin when it is almost empty; this generates a signal.
The barrier light is pulsed, because of the great amount of energy required.
The pulse is derived from the speed indicator signal and is approx. 50 usec long.
The synchronous scanning of the light barrier receiver is performed by the hardware.

The operator is requested to fit a full bobbin case, to close the free-arm cover and to press the foot control.
The sewing machine performs one revolution; no bobbin thread signal should be given.
The operator is requested to release the foot control again, to fit an empty bobbin case, to close the free-arm cover.
Press now the push-button **„Continue“**.
Press the foot control.
The sewing machine performs one revolution, and then halts.
The operator is requested to release the foot control.
If now a bobbin thread signal is not given, an error message will be issued.

An evaluation window (**OK** or **Error**) is displayed after completion of the test.

The current test can be interrupted with the **„i“** button.

Press now the push-button **„Continue“**.

63. Overload protection

After pressing the foot control a further time, the overload protection is tested:
The operator is requested to block the handwheel manually for about 10 seconds; this causes the machine motor to shut down for about 4 seconds.

Important:
The operator is only requested to release the foot control after these 4 seconds.
Test end.

All tests

If the function „All tests“ is activated, all above mentioned tests are executed in the indicated order and the results are recorded.
The test results are shown on the screen after pressing the **„Continue“** push-button.

If the test was ok, **„OK“** appears. If the test was skipped in the individual dialogue, this is indicated by „-“.
Otherwise **„ERROR“** appears.

Full test

Display: OK	Keys: OK
Touch panel: OK	Signal generator: OK
Foot control: OK	Sewing unit: OK
Presser foot lift: OK	Buttonhole control: OK
Synchronizer: OK	Machine motor: OK
Overload protection: OK	Bobbin thread monitor: OK

End = „i“ key

Touch the „**Main menu**“ button to return to the sewing program.

PFAFF

PFAFF GmbH
Amalienbadstraße 36
D-76227 Karlsruhe
Telefon + 49 (0)721/4001-0
Telefax + 49 (0)721/4001-513

E-Mail: info@pfaff.com
http://www.pfaff.de

Druckerei Gablenz GmbH
Stettiner Straße 17
76356 Weingarten

Printed in Germany
Technische Änderungen vorbehalten
Subject to alterations in design

Sous toute réserve de modifications techniques

Salvo modificaciones técniche
Con riserva di modifiche tecniche
Nr. 00125 English
C 2004 Copyright VSM Group AB
All rights reserved