# PARTS CATALOGUE FOR

# COMPUTERIZED SEWING MACHINE

# NX200

4. 2003.

# CONTENTS

(1) PRINCIPAL PARTS ..... 2

(2) UPPER SHAFT MECHANISM ..... 4

(3) NEEDLE BAR, PRESSER / FEED, ROTARY HOOK MECHANISM ..... 6

(4) ROTARY HOOK DRIVE / BOBBIN WINDER MECHANISM ..... 8

(5) THREAD GUIDE MECHANISM ..... 10

(6) ELECTRONIC PARTS / MOTOR UNIT ..... 12

(7) ATTACHMENTS / PRINTED MATTER / PACKING MATERIALS ..... 14

NEEDLE-PRESSER MODULE ..... 16

FEED MODULE ..... 20

# (1) PRINCIPAL PARTS

| No. | CODE | NAME | REMARKS |
|---|---|---|---|
| 1 | XC4617152 | REAR COVER | CHG |
| 2 | 060400816 | SCREW, BIND M4 × 8 | |
| 3 | XC2306052 | FACE PLATE | |
| 4 | X80321001 | NT LOWER THREAD CUTTER | |
| 5 | 138384051 | RETAINING RING,CS5 | |
| 6 | XC2747051 | NEEDLE THREAD LEVER KNOB | |
| 7 | XA5825051 | NEEDLE THREAD LEVER SHAFT | |
| 8 | XC3039051 | NEEDLE THREAD LEVER | |
| 9 | 138260051 | THREAD THROUGH LEVER SPRING | |
| 10 | XA6320050 | SHAFT PRESSER PLATE | |
| 11 | XA5525051 | WASHER,PLAIN | |
| 12 | 138433051 | TAPTITE,PAN B M3 × 6 | |
| 13 | XC0508050 | RUBBER WASHER | |
| 14 | X59629051 | TAPTITE,BIND B M3 × 10 | |
| 15 | 052401406 | SCREW PAN (S/P WASHER) M4 × 14 | |
| 16 | XC3156253 | FRONT COVER | CHG |
| 17 | XC2312053 | SS-BUTTON | |
| 18 | XC2313051 | REVERSE BUTTON | |
| 19 | XC2315051 | SV KEYTOP | |
| 20 | XC2316050 | SV JOINT PLATE | |
| 21 | XC3089051 | PCB ASSY:SS-VR F1 | |
| 22 | XC2323151 | VR KEYTOP | |
| 23 | XC2324051 | VR KEYTOP COVER | |
| 24 | XC4818051 | RUBBER KEY F0 | |
| 25 | XC4792051 | PCB ASSY:OPERATION F0 | |
| 26 | XC4816051 | OPERATION PCB HOLDER | |
| 27 | XA1786053 | SPOOL PIN | |
| 28 | XC2337051 | SPOOL PIN HOLDER ASSY | |
| 29 | XC2339051 | PCB UNIT:LED LAMP-FR | |
| 30 | XC2345051 | LED LAMP HOLDER R SUPPORTER | |
| 31 | XZ0150051 | TAPTITE,PAN B M2.6 × 10 | |
| 32 | XC2346051 | THREAD BOBBIN COVER | |
| 33 | 136681051 | TAPTITE, BIND B M3 × 8 | |
| 34 | 087311015 | TAPTITE, CUP B M3 × 10 | |
| 35 | XC2620051 | BOBBIN WINDER GUIDE ASSY | |
| 36 | XA8390051 | SCREW | |
| 37 | XZ0143050 | SSVR INSULATION SHEET | |
| 38 | 085411416 | TAPTITE, BIND B M4 × 14 | CHG |
| 39 | XA3337052 | TAPTITE,CUP P M4 × 20 | |
| 40 | XC2348051 | HANDLE | |
| 41 | XC2349051 | HANDLE HOLDER | |
| 42 | XC2350051 | HANDLE SHAFT | |
| 43 | 048040346 | RETAINING RING, E4 | |
| 44 | 137713050 | POLYESTER SLIDER | |

| No. | CODE | NAME | REMARKS |
|---|---|---|---|
| 45 | XC2353051 | BASE PLATE | |
| 46 | XA1805051 | BASE RUBBER A | |
| 47 | XA4687051 | REGULATOR ADJUSTING SCREW ASSY | |
| 48 | XC2354051 | BASE PLATE COVER | |
| 49 | 060300516 | SCREW, BIND M3 × 5 | |
| 50 | X57908051 | TAPTITE,BIND S M4 × 10 | |
| 51 | XC2358151 | ACCESSORY TABLE | |
| 52 | XC2359052 | ACCESSORY TABLE DOOR | |
| 53 | XC2360152 | CASE ASSEMBLY | |
| 54 | 125440050 | CASE FELT | |
| 55 | XC2702150 | HEAD SUPPORT SF-L | |
| 56 | XC2703050 | HEAD SUPPORT SF-R | |
| 57 | XZ0161051 | BLIND PLATE | |
| 58 | XC2365051 | NEEDLE PLATE B | |
| 59 | XC2366151 | SLIDE BUTTON | CHG |
| 60 | XC2367051 | CUTTER COVER | |
| 61 | XC2368051 | SPRING PLATE | |
| 62 | X80321001 | NT LOWER THREAD CUTTER | |
| 63 | XC2369051 | NEEDLE PLATE COVER | |
| 64 | XC2304063 | TOP COVER (U.S.A., CANADA) | |
| | XC2304064 | TOP COVER | |
| 65 | XC5167051 | INDICATION PLATE ASSY F0 | |
| 66 | XC4433051 | SCREW,PAN(T WASHER)M3 × 6 | |

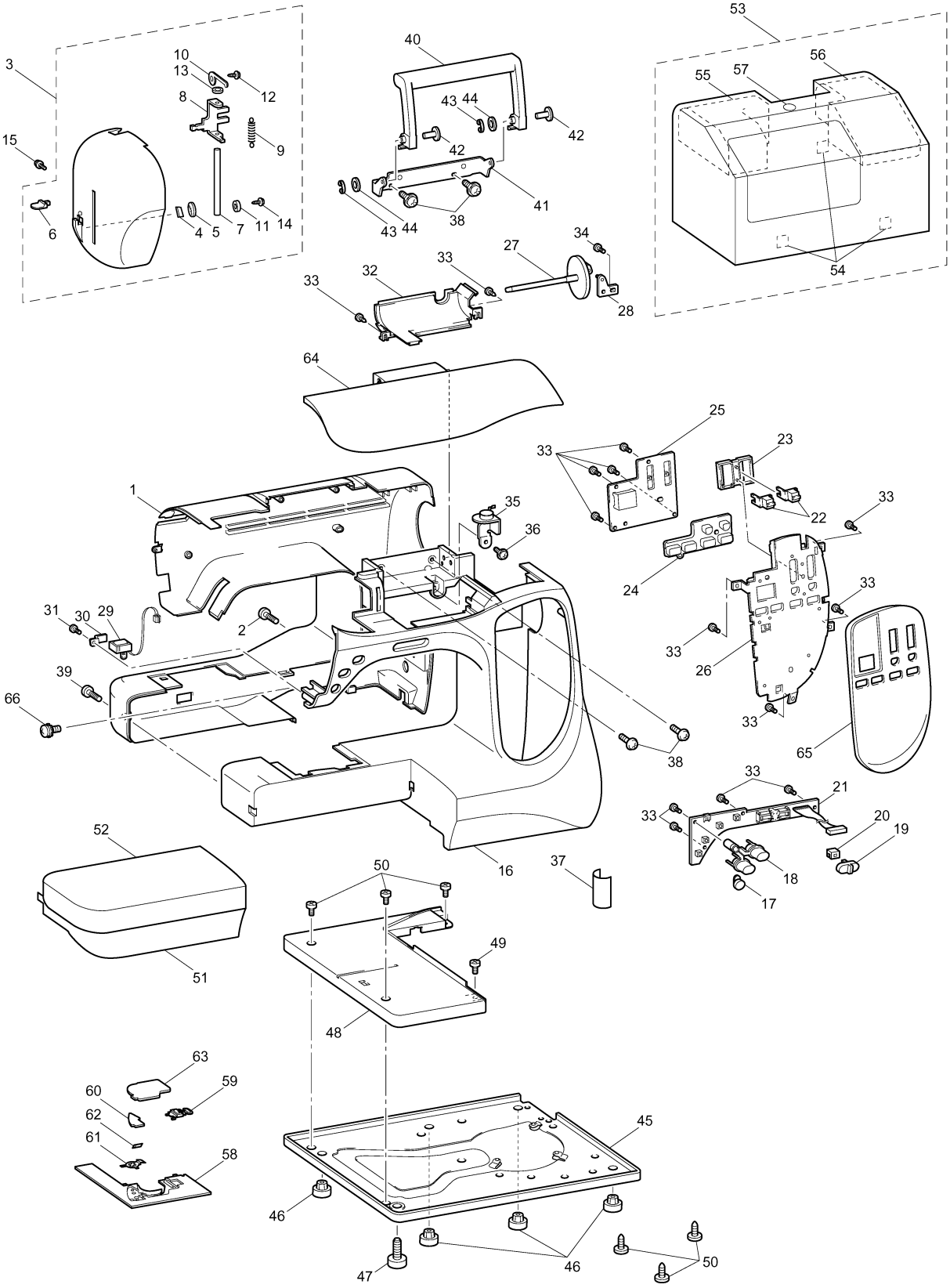
3
10
13
12
8
9
15
6
4
5
7
11
14
40
43
44
42
42
41
43
44
38
53
55
57
56
54
34
27
33
32
33
28
64
25
33
23
1
35
36
22
33
24
33
31
30
29
2
33
26
39
66
33
38
65
33
21
33
20
19
52
16
37
18
17
50
49
51
48
63
59
60
62
61
58
45
46
47
46
50

# (2) UPPER SHAFT MECHANISM

| No. | CODE | NAME | REMARKS |
|---|---|---|---|
| 1 | XC3246051 | UPPER SHAFT ASSY | |
| 2 | XC2375051 | PULLEY | |
| 3 | 048060346 | RETAINING RING, E6 | |
| 4 | XC2380050 | UPPER SHAFT PULLEY | |
| 5 | XC2383051 | FIXED JOINT | |
| 6 | 012500532 | SET SCREW, SOCKET (FT) M5 × 5 | |
| 7 | 132421051 | BUSHING PRESSER | |
| 8 | X57908051 | TAPTITE,BIND S M4 × 10 | |
| 9 | XC2384051 | TIMING BELT 420-5GT-6 | |
| 10 | XC2385051 | TENSION PULLEY ASSEMBLY | |
| 11 | 138172051 | SCREW,PAN(S/P WASHER)M4 × 10 | |
| 12 | XC2387051 | PCB ASSY:NP-F2 | |
| 13 | 136681051 | TAPTITE, BIND B M3 × 8 | |
| 14 | XC2390051 | PCB HOLDER | |
| 15 | 060400816 | SCREW, BIND M4 × 8 | |
| 16 | XC3028051 | INSULATION SHEET | |
| 17 | 014400432 | SET SCREW, SOCKET (CP) M4 × 4 | |

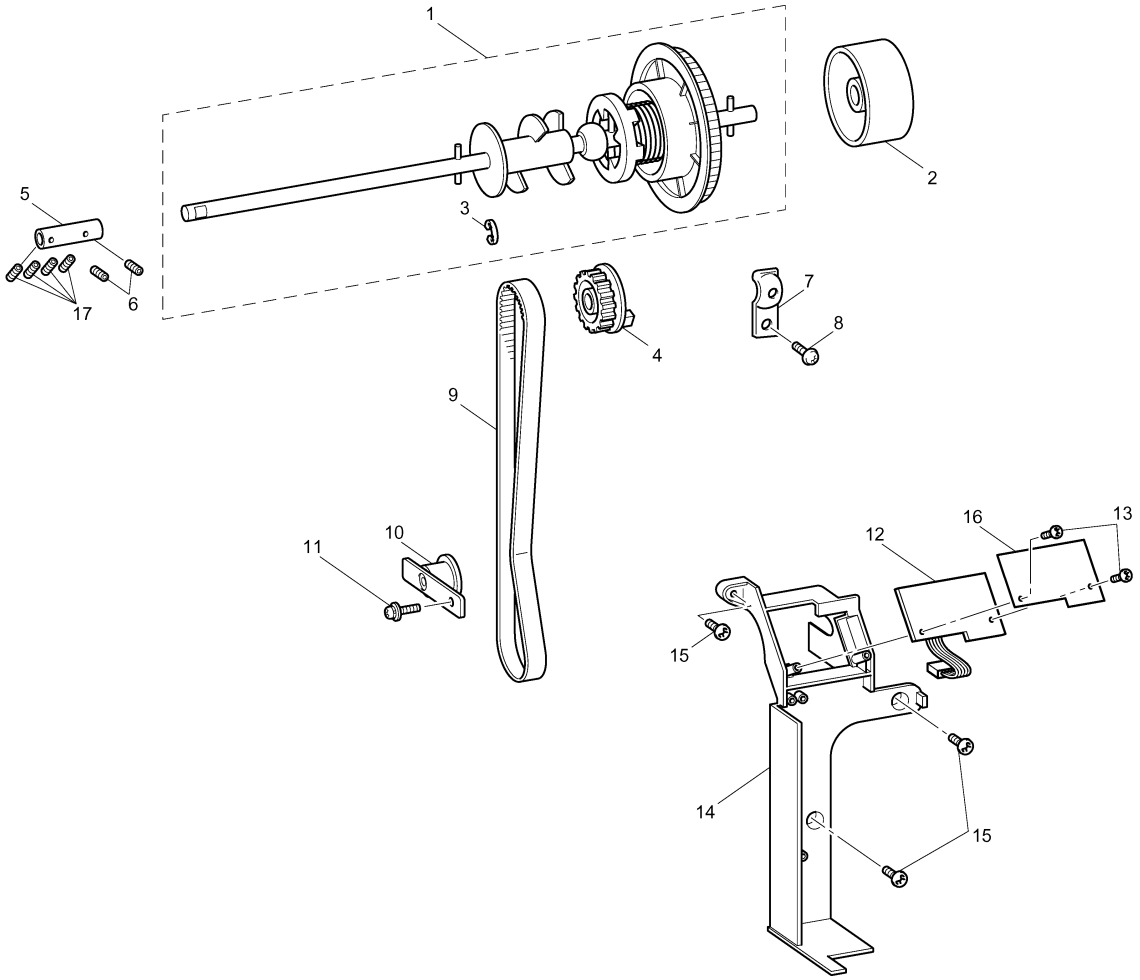
1
2
3
4
5
6
7
8
9
10
11
12
13
14
15
15
16
17

# (3) NEEDLE BAR, PRESSER / FEED, ROTARY HOOK MECHANISM

| No. | CODE | NAME | REMARKS |
|---|---|---|---|
| NEEDLE BAR, PRESSER MECHANISM | | | |
| 1 | XC2503051 | SHAFT | |
| 2 | XC2297051 | PRESSER PLATE A | |
| 3 | XC2298051 | PRESSER PLATE B | |
| 4 | X57908051 | TAPTITE,BIND S M4 × 10 | |
| 5 | XC2504050 | ADJUSTING SCREW | |
| 6 | 0A1301606 | SCREW,PAN(P WASHER)M3 × 16 | |
| 7 | XC2505050 | PLATE SPRING | |
| 8 | 060400516 | SCREW, BIND M4 × 5 | |
| 9 | XC4532051 | PCB UNIT:LED LAMP-FL | |
| 10 | XZ0149051 | TAPTITE,PAN B 4 × 12 | |
| 11 | 048050346 | RETAINING RING, E5 | |
| FEED / ROTARY HOOK MECHANISM | | | |
| 12 | XC3153051 | INNER ROTARY HOOK ASSY | |
| 13 | X52800150 | BOBBIN | |
| 14 | XC3096051 | SCREW M4 | |
| 15 | XC4033051 | GUIDE PLATE | |
| 16 | 060400516 | SCREW, BIND M4 × 5 | |
| 17 | 060300516 | SCREW, BIND M3 × 5 | |
| 18 | XZ0160051 | SHEET | |

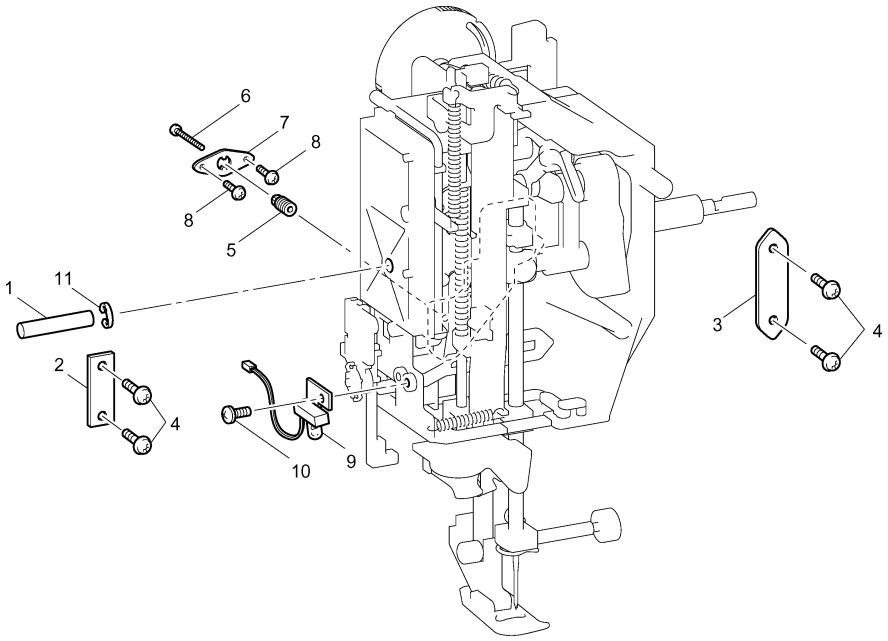
6
7
8
8
5
1
11
2
4
10
9
3
4

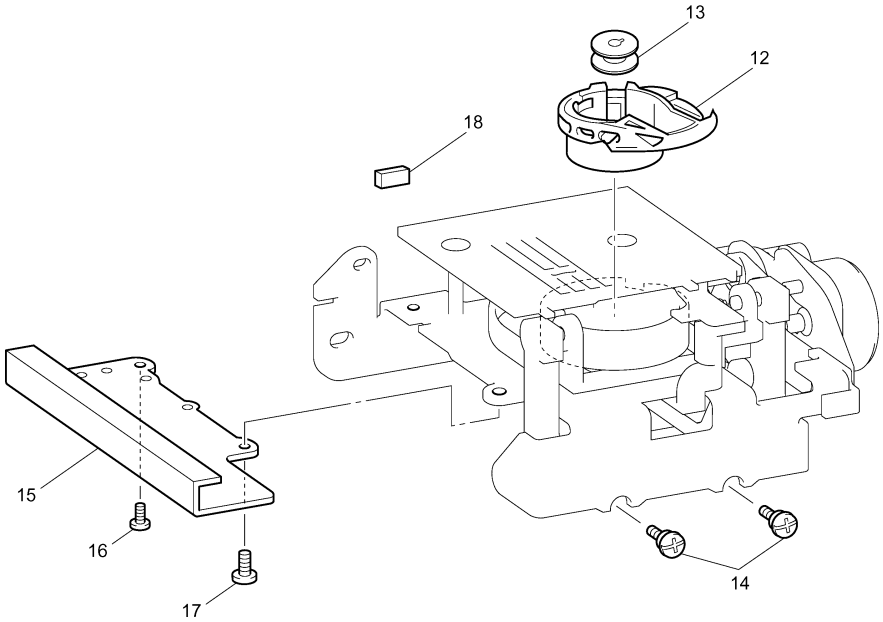
13
12
18
15
16
17
14

# (4) ROTARY HOOK DRIVE / BOBBIN WINDER MECHANISM

| No. | CODE | NAME | REMARKS |
|---|---|---|---|
| | | ROTARY HOOK DRIVE MECHANISM | |
| 1 | XC2600050 | LOWER SHAFT A | |
| 2 | XC2601051 | TIMING PULLEY D | |
| 3 | 014500532 | SET SCREW, SOCKET (CP) M5 × 5 | |
| 4 | X52664050 | LOWER SHAFT BUSHING | |
| 5 | X51383050 | WASHER,THRUST | |
| 6 | 048060346 | RETAINING RING, E6 | |
| 7 | 137768151 | SET SCREW COLLAR | |
| 8 | 014400432 | SET SCREW, SOCKET (CP) M4 × 4 | |
| 9 | XC2602051 | JOINT | |
| 10 | 012500532 | SET SCREW, SOCKET (FT) M5 × 5 | |
| 11 | XC2602051 | JOINT | |
| 12 | 012500532 | SET SCREW, SOCKET (FT) M5 × 5 | |
| 13 | 132421051 | BUSHING PRESSER | |
| 14 | X57908051 | TAPTITE,BIND S M4 × 10 | |
| 15 | XC2603050 | DISK | |
| | | BOBBIN WINDER MECHANISM | |
| 16 | XC2605051 | BOBBIN WINDER ASSEMBLY HOLDER | |
| 17 | XC2606051 | BW SHAFT HOLDER ASSEMBLY | |
| 18 | X55238051 | RUBBER RING | |
| 19 | 125928050 | BOBBIN WINDER SHAFT SPRING | |
| 20 | XA2862051 | BOBBIN WINDER SHAFT STOPPER | |
| 21 | XZ0070051 | BOBBIN WINDER SPRING | |
| 22 | XC2614051 | SW ADJUST PLATE | |
| 23 | 060300616 | SCREW, BIND M3 × 6 | |
| 24 | XC2612051 | SW ASSY:BW-F | |
| 25 | XC4672051 | BOBBIN BASE ASSY | |
| 26 | XC2616051 | BOBBIN BASE | |
| 27 | XA5877051 | BOBBIN THREAD CUTTER HOLDER | |
| 28 | X80321001 | NT LOWER THREAD CUTTER | |
| 29 | XC2618051 | BOBBIN WINDER COVER | |
| 30 | XA8390051 | SCREW | |
| 31 | XC4517051 | BOBBIN PRESSER | |
| 32 | 0A4302006 | SCREW | |
| 33 | 021300106 | NUT, 1 M3 | |
| 34 | XC2615051 | BW HOLDER SUPPORTER | |
| 35 | X57908051 | TAPTITE,BIND S M4 × 10 | |
| 36 | 060400816 | SCREW, BIND M4 × 8 | |
| | | | |
| | | | |
| | | | |
| | | | |
| | | | |
| | | | |

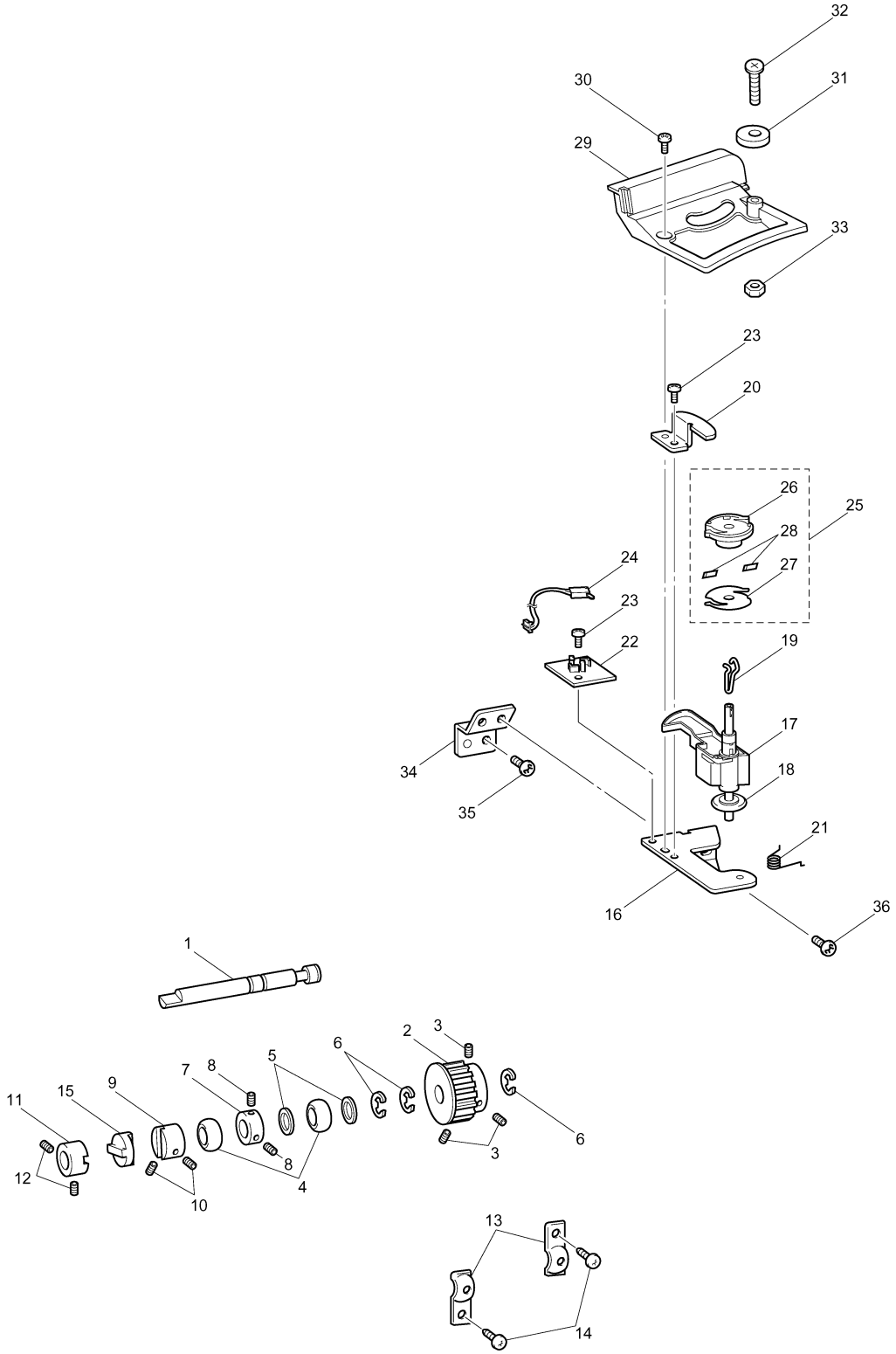
32
30
31
29
33
23
20
26
25
28
24
27
23
22
19
17
34
18
35
21
16
36
1
2
3
6
5
7
8
9
15
11
6
3
8
12
4
10
13
14

# (5) THREAD GUIDE MECHANISM

| No. | CODE | NAME | REMARKS |
|---|---|---|---|
| 1 | XC2624151 | THREAD GUARD ASSEMBLY | |
| 2 | XA0083051 | TENSION DISC A | |
| 3 | XC2626051 | TENSION DISC B | |
| 4 | XC3437051 | TENSION ADJUSTING SCREW | |
| 5 | XA1388051 | TENSION DISC WASHER | |
| 6 | XC2627051 | TENSION RELEASE PLATE ASSY | |
| 7 | XA9900051 | THREAD TENSIONSPRING | |
| 8 | 109763053 | WASHER | |
| 9 | XC2629051 | TENSION PLATE ASSY F2 | |
| 10 | XC2630054 | THREAD TENSION DIAL | |
| 11 | 137999050 | POLYESTER SLIDER | |
| 12 | 048030346 | RETAINING RING, E3 | |
| 13 | XC2633051 | SPRING PLATE | |
| 14 | 060300416 | SCREW, BIND M3 × 4 | |
| 15 | XA9935050 | SPRING TAPE | |
| 16 | XC2635051 | TENSION RELEASE HOLDER ASSY | |
| 17 | XA9571051 | TENSION RELEASERLINK | |
| 18 | 048030346 | RETAINING RING, E3 | |
| 19 | XC2638051 | TENSION PRESSURE ASSY | |
| 20 | XA9575051 | TENSION PLATE | |
| 21 | XA9576051 | SPACER | |
| 22 | XA9577051 | SPRING | |
| 23 | XC2640051 | TENSION RELEASE CAM | |
| 24 | 012300432 | SET SCREW, SOCKET (FT) M3 × 4 | |
| 25 | X57363051 | POWER LOCK 2 × 3 | |
| 26 | X57605051 | SPRING | |
| 27 | 048020346 | RETAINING RING, E2 | |
| 28 | XC2644051 | PLATE ASSEMBLY | |
| 29 | XC2647051 | THREAD GUIDE SHUTTER | |
| 30 | XC2749051 | THREAD GUIDE | |
| 31 | XZ0145051 | THREAD TAKE UP SPRING | |
| 32 | XC2648051 | THREAD CATCHING SPRING CASE | |
| 33 | 0A4301806 | SCREW, PAN S/P WASHER M3 × 18 | |
| 34 | XC2649050 | THREAD GUIDE SHUTTER LINK | |
| 35 | 048030346 | RETAINING RING, E3 | |
| 36 | XC2650051 | SPRING | |
| 37 | XC2651050 | THREAD GUIDE WIRE | |
| 38 | XA9996051 | WASHER,PLAIN | |
| 39 | 052300606 | SCREW, PAN (S/P WASHER) M3 × 6 | |
| 40 | 060300416 | SCREW, BIND M3 × 4 | |
| 41 | XC2641051 | PRESSER SWITCH HOLDER | |
| 42 | XC2642051 | SW ASSY:PF-F | |
| 43 | X55260153 | SPOOL PRESSER C | |
| 44 | XA9787051 | SPRING | |
| 45 | 085411015 | TAPTITE, BIND B M4 × 10 | |
| 46 | XC2652152 | THREAD GUIDE COVER | |
| 47 | XC2655053 | FRONT THREAD GUARD COVER | |
| 48 | XC4203251 | THREAD GUIDE ASSY | CHG |
| 49 | 060300416 | SCREW, BIND M3 × 4 | |
| 50 | XC2659052 | THREAD GUIDE COVER | |
| 51 | 085310615 | TAPTITE, BIND B M3 × 6 | |
| 52 | 052300606 | SCREW, PAN (S/P WASHER) M3 × 6 | |

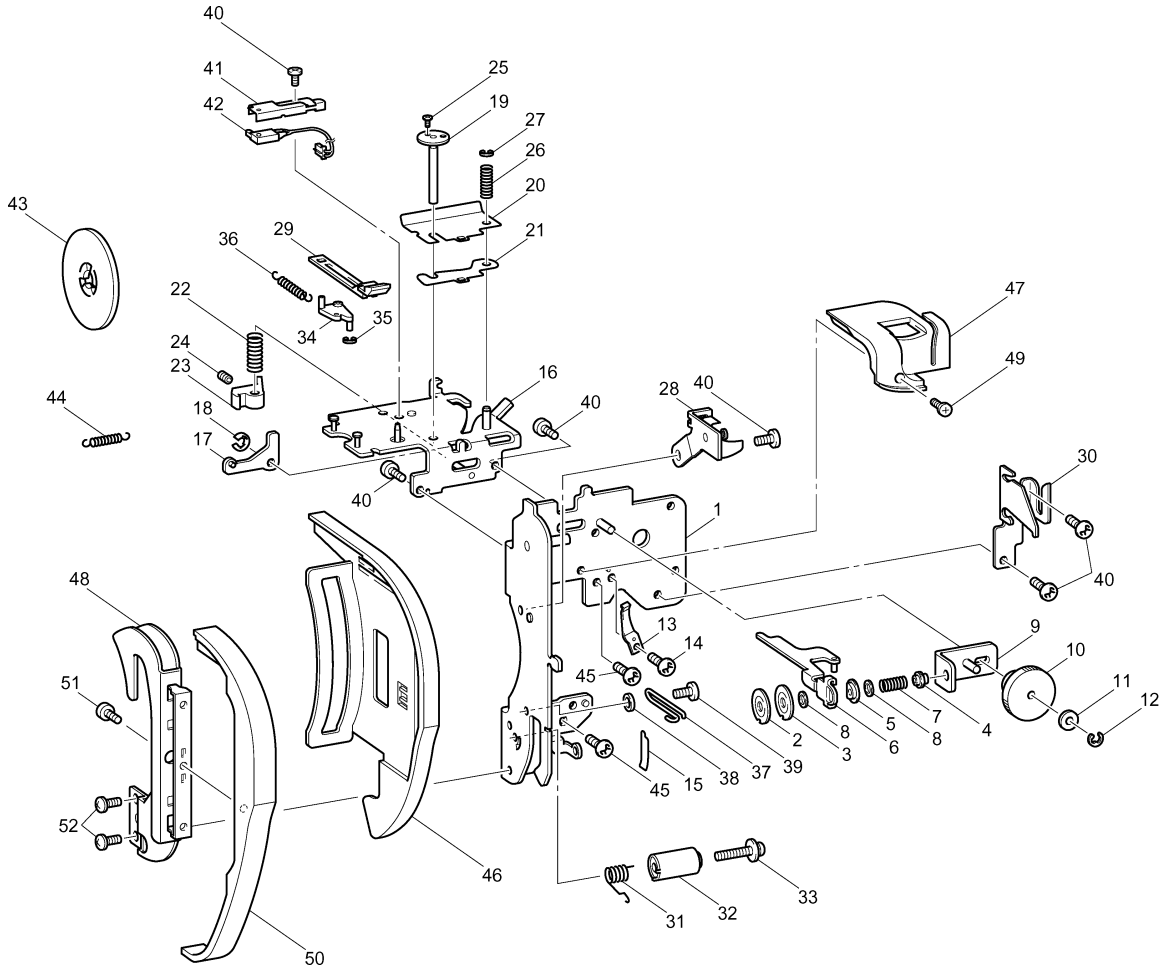
40
41
42
25
19
27
26
20
21
43
36
29
22
35
34
24
23
16
44
18
17
40
28
40
47
49
30
40
1
48
13
14
9
10
11
12
51
45
2
8
3
5
6
7
8
4
39
37
38
15
45
52
46
33
32
31
50

# (6) ELECTRONIC PARTS / MOTOR UNIT

| No. | CODE | NAME | REMARKS |
|---|---|---|---|
| | | ELECTRONIC PARTS | |
| 1 | XC4791051 | PCB ASSY:MAIN F0-B | |
| 2 | 136681051 | TAPTITE, BIND B M3 × 8 | |
| 3 | 060400816 | SCREW, BIND M4 × 8 | |
| 4 | XC2672051 | LEAD ASSY:BH CABLE-F | |
| 5 | XA0286051 | WIRE CLIP | |
| 6 | X57908051 | TAPTITE,BIND S M4 × 10 | |
| 7 | X53169050 | BAND | |
| 8 | XC2675252 | POWER SUPPLY UNIT,F (U.S.A., CANADA) | |
| | XC2675251 | POWER SUPPLY UNIT,F | |
| 9 | XC4488051 | FC JACK-F SUPPLY ASSY | CHG |
| 10 | X51271001 | NUT | |
| 11 | 136681051 | TAPTITE, BIND B M3 × 8 | |
| 12 | 052401406 | SCREW PAN (S/P WASHER) M4 × 14 | |
| 13 | XC4412051 | INLET ASSY:F1D-US (U.S.A., CANADA) | |
| | XC4417051 | INLET ASSY:F1D-EU (EUROPE) | |
| 14 | 060400616 | SCREW, BIND M4 × 6 | |
| 15 | XC6052051 | POWER SUPLY CORD:UL CSA-LF (U.S.A., CANADA) | CHG |
| | XA0070151 | POWER SUPPLY CORD (EUROPE) | |
| | X59354051 | POWER SUPPLY CORD (U.K.) | |
| | X59328151 | POWER SUPPLY CORD (AUSTRALIA) | |
| | | MOTOR UNIT | |
| 16 | XC2685051 | T BELT494-2GT-6 | |
| 17 | XC2687051 | ASSY:MAIN MOTOR-F | |
| 18 | XC2690051 | MOTOR HOLDER | |
| 19 | XA9649050 | FENDER RUBBER | |
| 20 | XA9650051 | MOTOR SPACER PRESSER | |
| 21 | XC3027051 | SPACER 4 × 6 | |
| 22 | 052401406 | SCREW PAN (S/P WASHER) M4 × 14 | |
| 23 | XA8474051 | UPSET 4 × 12 DB | |
| 24 | XA9652150 | MOTOR FAN | |
| 25 | XC6651051 | FOOT CONTOROLLER:FC-313-61-LF | CHG |

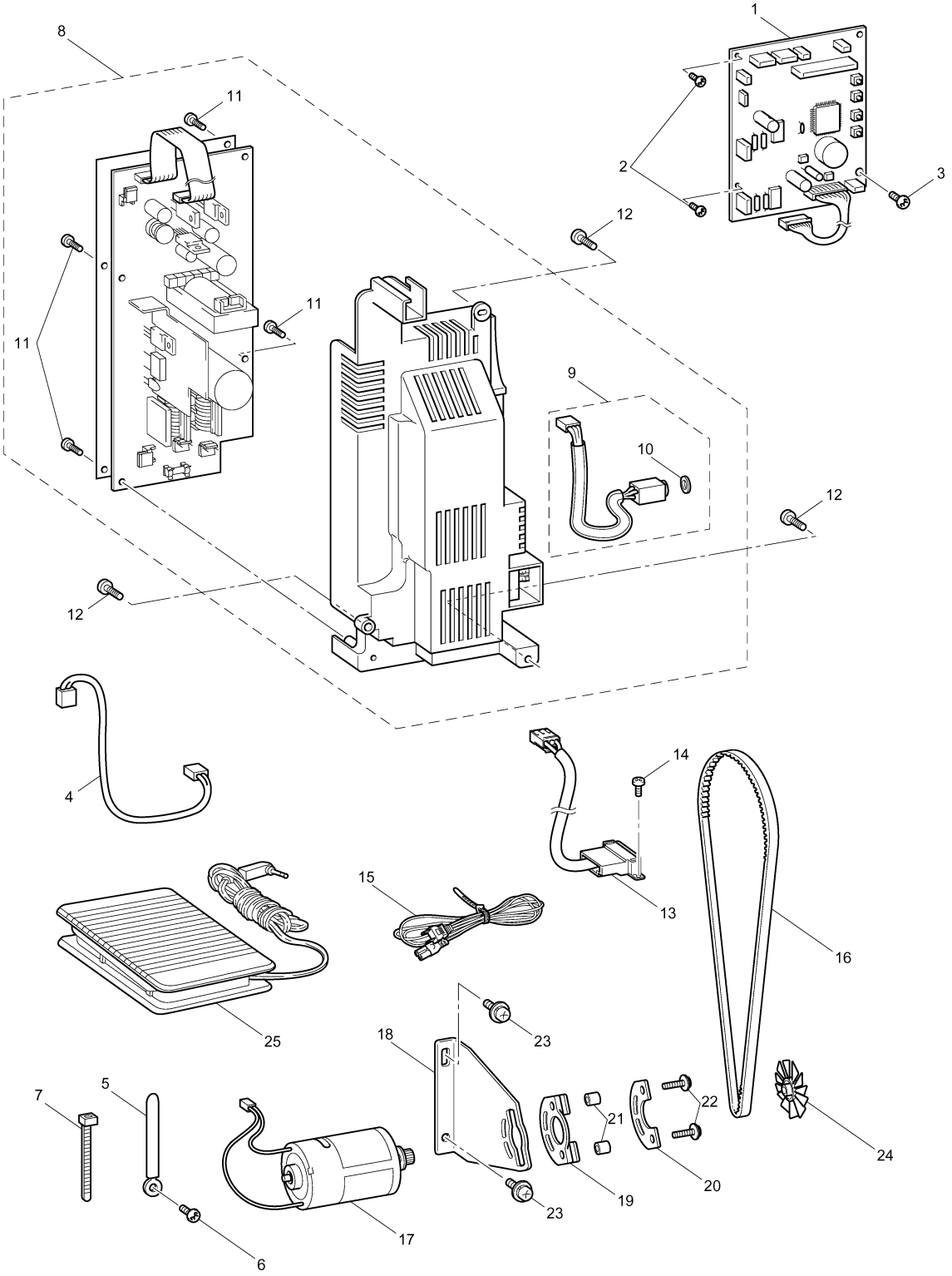
1
2
3
4
5
6
7
8
9
10
11
11
11
12
12
12
13
14
15
16
17
18
19
20
21
22
23
23
24
25

# (7) ATTACHMENTS / PRINTED MATTER / PACKING MATERIALS

| No. | CODE | NAME | REMARKS |
|---|---|---|---|
| | | ATTACHMENTS | |
| 1 | XC4487051 | ACCESSORY BAG | |
| 2 | XC2691051 | BH PRESSER FOOT ASSY | |
| 3 | X54243001 | SEAM RIPPER | |
| 4 | X58358051 | Z NEEDLE ASSY | |
| 5 | X52800150 | BOBBIN | |
| 6 | X59476051 | CLEANING BRUSH | |
| 7 | XC3098051 | OVERCASTING STITCH FOOT ASSY | |
| 8 | 130012054 | SPOOL PRESSER A | |
| 9 | X56409051 | BLIND STITCH FOOT ASSY | |
| 10 | X59370051 | ZIPPER FOOT | |
| 11 | 130013154 | SPOOL PRESSER B | |
| 12 | XA5523050 | NET | |
| 13 | X55467051 | SCREW DRIVER | |
| 14 | X55468051 | SCREW DRIVER S | |
| 15 | 135793001 | PUNCH | CHG |
| 16 | X53840351 | TRANSPARENCY PRESSER FOOT | |
| 17 | 130489001 | BUTT0NING F00T | |
| 18 | XC4654051 | EXTRA SPOOL PIN ASSY | |
| 19 | X55260153 | SPOOL PRESSER C | |
| 20 | X57367051 | BAG,135 × 150 | |
| 21 | X59296151 | TWIN NEEDLE (1PC) | |
| 22 | XC4489051 | ACCESSORY TRAY | |
| 23 | XC4490050 | SPONGE | |
| 24 | XA0188050 | BAG | |
| | | PRINTED MATTER | |
| 25 | XC4665051 | INSTRUCTION BOOK (English) | |
| | XC4666051 | INSTRUCTION BOOK (French) | |
| | XC4667051 | INSTRUCTION BOOK (German) | |
| | XC4668051 | INSTRUCTION BOOK (Dutch) | |
| | XC4669051 | INSTRUCTION BOOK (Spanish) | |
| | XC4670051 | INSTRUCTION BOOK (Italian) | |
| 26 | XC0378051 | WARRANTY CARD (U.S.A.) | |
| | UH3851001 | WARRANTY CARD EUR (EUROPE) | |
| | XA6351151 | WARRANTY CARD (ITALY) | |
| | XC6402051 | WARRANTY CARD (U.K.) | ADD |
| 27 | 181401137 | INSERTION WARRANTY COUPON (U.K.) | |
| | 181401172 | INSERTION WARRANTY COUPON (CANADA) | |
| 28 | XC4546151 | QUICK REFERENCE GUIDE | CHG |
| 29 | XC4545051 | CAUTION SHEET | |
| 30 | 130800051 | BAG,220 × 310 | |
| | | PACKING MATERIALS | |
| 31 | XC2704150 | BODY SUPPORT SF | |

| No. | CODE | NAME | REMARKS |
|---|---|---|---|
| 32 | XC2705050 | CASE SUPPORT | |
| 33 | XC2706050 | CASE SUPPORT SF-R | |
| 34 | X60439151 | BAG,630 × 630T | |
| 35 | XC4623054 | CARTON | |
| | XC4623053 | CARTON (U.S.A., CANADA) | |
| 36 | XC4515050 | BAG, BUBBLE PACK 250 × 250 | |
| 37 | X57847051 | PLUG LABEL (U.K.) | |
| 38 | XC4762050 | THREADER SUPPORT SF | |
| 39 | X61319051 | BAG,750 × 600H | |

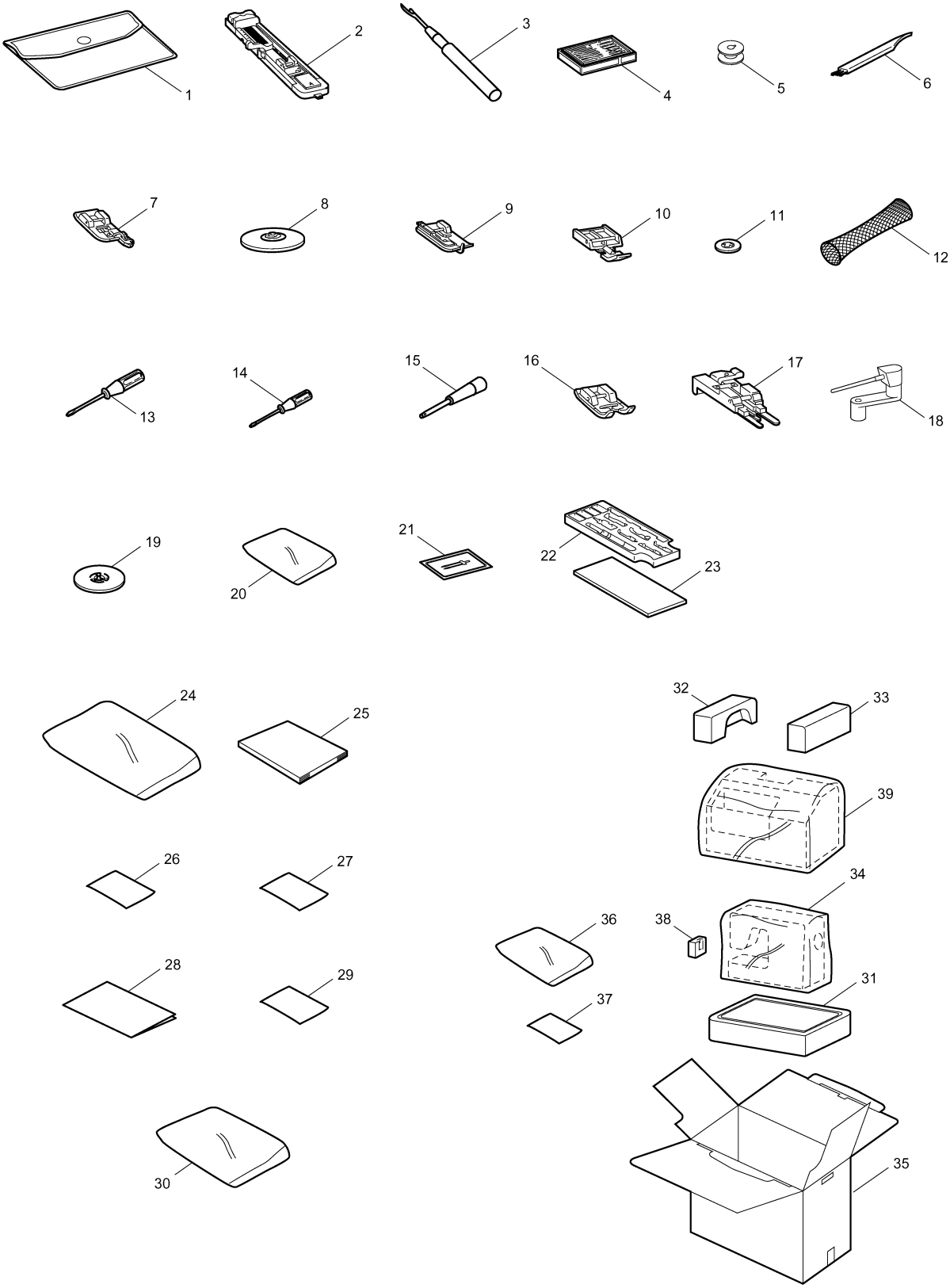
1
2
3
4
5
6
7
8
9
10
11
12
13
14
15
16
17
18
19
20
21
22
23
24
25
26
27
28
29
30
31
32
33
34
35
36
37
38
39

# NEEDLE-PRESSER MODULE

| No. | CODE | NAME | REMARKS |
|---|---|---|---|
| 1 | XC2394121 | UPPER UNIT HOLDER | |
| 2 | XZ0177021 | SHAFT BUSHING ASSEMBLY | CHG |
| 3 | 0A5401405 | SCREW,PAN(S/P WASHER)M4 × 14DB | |
| 4 | XC2398020 | SHAFT BUSHING A | |
| 5 | XC2399021 | PRESSER BAR BUSHING | |
| 6 | 085310815 | TAPTITE, BIND B M3 × 8 | |
| 7 | XC5362020 | PLATE SPRING | |
| 8 | XC2400021 | THREAD TAKE-UP COUNTER WEIGHT | |
| 9 | 012500532 | SET SCREW, SOCKET (FT) M5 × 5 | |
| 10 | XC2401021 | UNIT SHAFT | |
| 11 | 132434050 | WASHER | |
| 12 | 048060346 | RETAINING RING, E6 | |
| 13 | XC2402052 | NEEDLE BAR SUPPORTER ASSY | CHG |
| 14 | XC2418020 | HOOK RELEASE PLATE | |
| 15 | 060260516 | SCREW, BIND M2.6 × 5 | |
| 16 | XC3032051 | THREADER HOOK ASSY | |
| 17 | XA3565021 | LINK A ASSY | |
| 18 | XA3569021 | LINK B | |
| 19 | XC2415021 | THREAD GUIDE ASSY | |
| 20 | XC2419021 | SHAFT | |
| 21 | 000020415 | SCREW,BIND M2 × 4 | |
| 22 | XC2420020 | SHAFT | |
| 23 | XC2421121 | PLATE | CHG |
| 24 | 060300516 | SCREW, BIND M3 × 5 | |
| 25 | XC2423021 | NEEDLE BAR | CHG |
| 26 | XC2424021 | NEEDLE BAR THREAD GUIDE | |
| 27 | X53053052 | SCREW SM2.38 | |
| 28 | XC2426020 | NEEDLE THREAD PLATE | |
| 29 | XC2427051 | NEEDLE BROCK | |
| 30 | XC2428021 | NEEDLE CLAMP SCREW | |
| 31 | 014401232 | SET SCREW, SOCKET (FT) M4 × 12 | |
| 32 | X56851051 | LOCK NUT | |
| 33 | XC2429021 | SPRING | |
| 34 | XZ0152051 | NEEDLE BAR CRANK ROD ASSY | |
| 35 | 132051052 | SCREW, FLAT SM3.57-40 × 7 L | |
| 36 | 012500532 | SET SCREW, SOCKET (FT) M5 × 5 | |
| 37 | 014400432 | SET SCREW, SOCKET (CP) M4 × 4 | DEL |
| 38 | XC2434021 | NEEDLE THREAD BLOCK | |
| 39 | 012400432 | SET SCREW, SOCKET (FT) M4 × 4 | |
| 40 | XC2435020 | ZIGZAG ADJUSTING NUT | |
| 41 | 018301032 | BOLT,SOCKET M3 × 10 | |
| 42 | XC2748021 | SPRING-Z | |
| 43 | XC2436021 | NEEDLE HOLDER BROCK | |
| 44 | XC2437021 | SHAFT ASSY | |

| No. | CODE | NAME | REMARKS |
|---|---|---|---|
| 45 | XC2440021 | SHAFT | |
| 46 | 014300532 | SET SCREW, SOCKET (CP) M3 × 5 | |
| 47 | XC2441021 | SPRING | |
| 48 | XC2442151 | THREAD TAKE-UP LEVER | CHG |
| 49 | XC2443020 | THREAD TAKE-UP LEVER LINK | |
| 50 | XC2444021 | PRESSER BAR | |
| 51 | XC2445021 | PRESSER BAR CLAMP ASSY | |
| 52 | 014501032 | SET SCREW,SOCKET(CP)M5 × 10 | |
| 53 | XC4457051 | SPRING | |
| 54 | XC4458050 | PRESSER SPRING SUPPORTER | |
| 55 | XC3015051 | PRESSER FEED HOLDER ASSY | |
| 56 | XA4813051 | SCREW | |
| 57 | XC3021051 | Z FOOT | |
| 58 | XC2451021 | PRESSER FOOT LIFTER | |
| 59 | XC2452021 | PRESSER LIFT SHAFT | |
| 60 | XA1860150 | WASHER | |
| 61 | 048040346 | RETAINING RING, E4 | |
| 62 | XC2453021 | LEVER GUIDE SHAFT | |
| 63 | XC2455021 | LEVER A ASSY | |
| 64 | XC2458021 | LEVER B | |
| 65 | XC2459020 | CAP | |
| 66 | XC2460021 | TORSION SPRING | |
| 67 | 048030346 | RETAINING RING, E3 | |
| 68 | XC2461021 | SPRING | |
| 69 | XC2462021 | LEVER PRESSER PLATE | |
| 70 | 085310615 | TAPTITE, BIND B M3 × 6 | |
| 71 | XC2463121 | BH SWITCH ASSY | |
| 72 | XZ0149051 | TAPTITE,PAN B 4 × 12 | |
| 73 | XC2474020 | Z ZIGZAG CAM | |
| 74 | XC2476021 | Z ZIGZAG LEVER ASSY | |
| 75 | XC2480020 | Z LEVER CUP | |
| 76 | XC2481021 | MOTOR,PULSE:Z SMJ35-4840-A | |
| 77 | 085311015 | SCREW, BIND B TITE 3 × 10 | |
| 78 | XC2483020 | T CAM | |
| 79 | XC2491021 | THREAD RELEASER ASSY | |
| 80 | XC2494021 | THREAD RELEASE LEVER ASSY | |
| 81 | XC2498021 | ADJUSTING PLATE ASSY | |
| 82 | XC2501121 | TENSION RELEASER C | |
| 83 | 048030346 | RETAINING RING, E3 | |
| 84 | 085411015 | TAPTITE, BIND B M4 × 10 | |
| 85 | XC3037021 | SCREW3 × 10 | |
| 86 | XC2475021 | SHAFT | |
| 87 | 048020346 | RETAINING RING, E2 | |
| 88 | XC3034020 | THREAD GUIDE PLATE | |

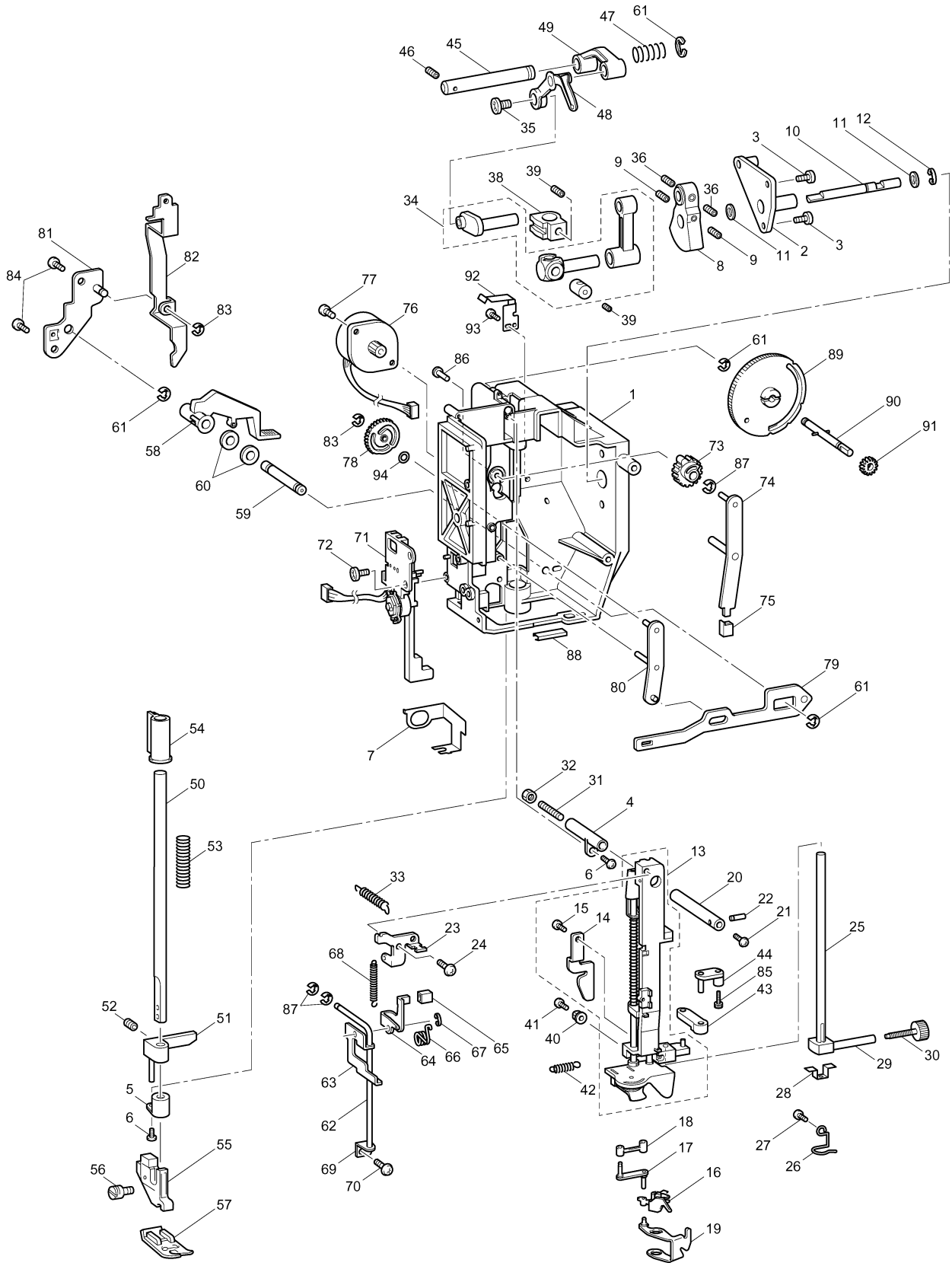

61
47
49
45
46
48
35
3
10
11
12
9
36
38
39
34
36
81
82
84
83
77
76
92
93
39
8
9
11
2
3
61
89
86
1
90
91
61
58
83
78
94
73
87
74
60
59
72
71
75
88
80
79
61
54
7
50
32
31
4
53
6
13
33
20
22
21
15
14
23
24
25
68
44
85
43
87
52
51
41
40
64
66
67
65
63
42
29
30
28
5
6
62
18
27
55
17
26
56
69
70
16
57
19

# NEEDLE-PRESSER MODULE

| No. | CODE | NAME | REMARKS |
|---|---|---|---|
| 89 | XC4468051 | PRESSER DIAL | |
| 90 | XC4522051 | PRESSER DIAL SHAFT ASSY | |
| 91 | XC4471050 | PRESSER DIAL GEAR | |
| 92 | XC4472051 | PLATE SPRING | |
| 93 | 085310815 | TAPTITE, BIND B M3 × 8 | |
| 94 | XZ0155051 | POLYESTER SLIDER | ADD |
| | | | |
| | | NEEDLE-PRESSER MODULE F3 | |

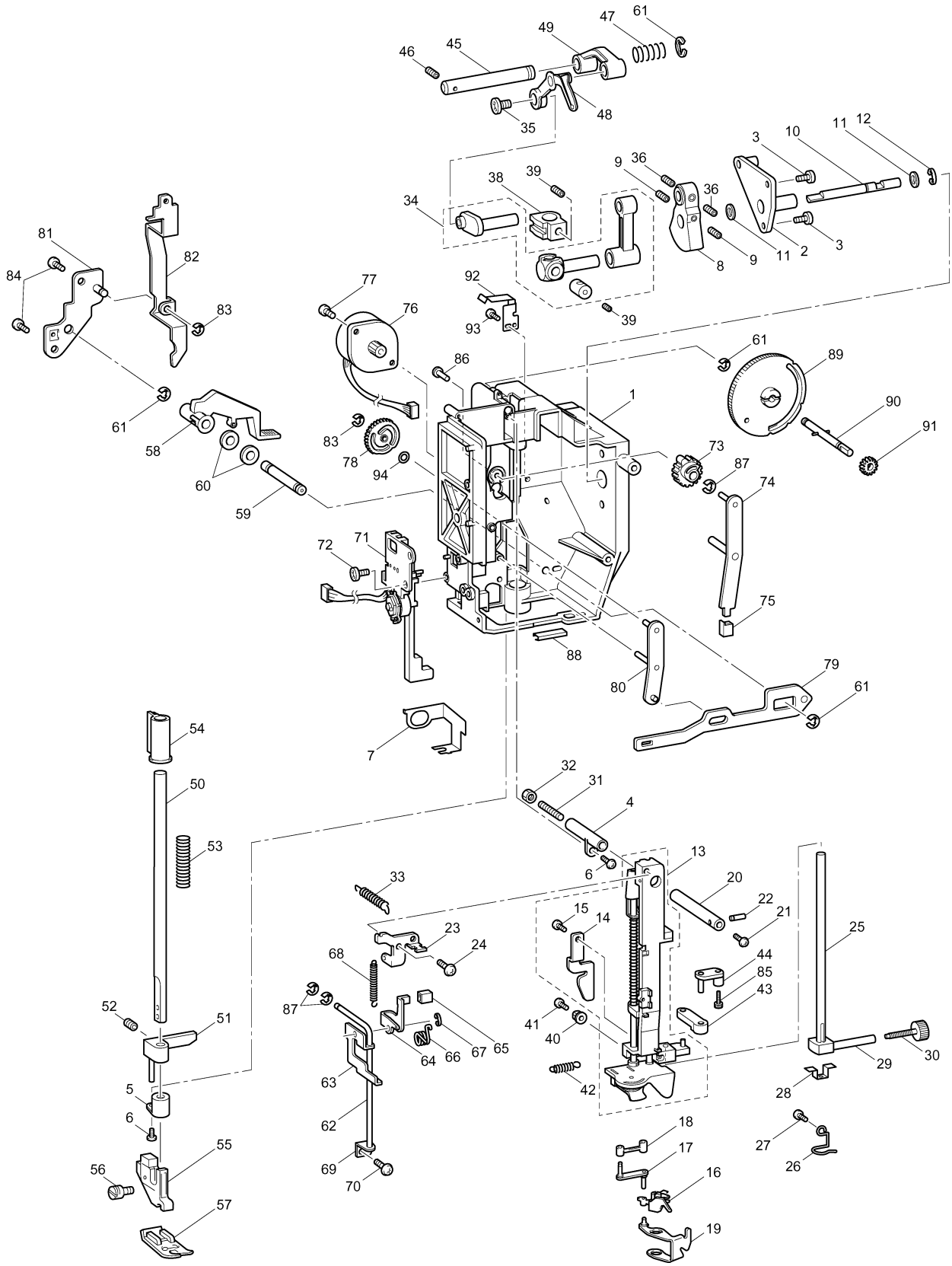

61
47
49
45
46
48
35
3
10
11
12
9
36
38
39
34
36
81
82
84
83
77
76
92
93
39
8
9
11
2
3
61
89
86
1
90
91
61
58
83
78
94
73
87
74
60
59
72
71
75
88
80
79
61
54
7
50
32
31
4
53
6
13
33
20
22
21
15
14
23
24
25
68
44
85
43
87
52
51
41
40
64
66
67
65
63
42
29
30
28
5
6
62
18
27
55
17
26
56
69
70
16
57
19

# FEED MODULE

| No. | CODE | NAME | REMARKS |
|---|---|---|---|
| 1 | XC3356051 | FEED BASE | |
| 2 | XC2510021 | FEED BAR | |
| 3 | XC2511021 | FEED DOG | |
| 4 | XC2512021 | FEED BAR SHAFT A | |
| 5 | XC2513021 | FEED BAR SHAFT B | |
| 6 | XC2514021 | FEED BAR SPACER | |
| 7 | 048020346 | RETAINING RING, E2 | |
| 8 | XC2516021 | FEED ARM A | |
| 9 | XC2517021 | FEED ARM B ASSY | |
| 10 | XC2521021 | FEED SUPPORTING PLATE ASSY | |
| 11 | 048020346 | RETAINING RING, E2 | |
| 12 | 048030346 | RETAINING RING, E3 | |
| 13 | 137999050 | POLYESTER SLIDER | |
| 14 | XZ0174021 | SPRING | |
| 15 | XC2525021 | HORIZONTAL FEED SHAFT | |
| 16 | 048050346 | RETAINING RING, E5 | |
| 17 | X50546050 | WASHER,THRUST | |
| 18 | XC2527021 | FEED ADJUSTER | |
| 19 | XC2529020 | F GEAR | |
| 20 | XC2530021 | SPRING | |
| 21 | 137713050 | POLYESTER SLIDER | |
| 22 | XC2531021 | SPRING | |
| 23 | XC2532021 | FPM HOLDER ASSY | |
| 24 | XC2534021 | MOTOR,PULSE:F SMJ35-4840-C | |
| 25 | XC2587050 | RUBBER | |
| 26 | 060300516 | SCREW, BIND M3 × 5 | |
| 27 | XC3338021 | SCREW3 × 8 | |
| 28 | 018402532 | BOLT,SOCKET M4 × 25 | |
| 29 | XC2537021 | SPRING | |
| 30 | XC2538021 | SPRING | |
| 31 | XC2539021 | BUSHING SUPPORTER ASSY | |
| 32 | 060400616 | SCREW, BIND M4 × 6 | |
| 33 | XC2542021 | BUSHING PRESSER B | |
| 34 | 060300516 | SCREW, BIND M3 × 5 | |
| 35 | XC3941051 | VERTICAL ADJUSTER SCREW ASSY | |
| 36 | XC2546021 | M5 NUT | |
| 37 | XC2547021 | SPRING | |
| 38 | XC2549021 | VERTICAL FEED SHAFT | |
| 39 | XC2550021 | SPRING | |
| 40 | XC2551020 | VERTICAL LEVER | |
| 41 | XC2552021 | SET SCREW COLLAR | |
| 42 | 014400432 | SET SCREW, SOCKET (CP) M4 × 4 | |
| 43 | 048030346 | RETAINING RING, E3 | |
| 44 | XC2553020 | VERTICAL SUPPURTING PLATE | |

| No. | CODE | NAME | REMARKS |
|---|---|---|---|
| 45 | 137713050 | POLYESTER SLIDER | |
| 46 | XC2210051 | OUTER ROTALY HOOK ASSY | |
| 47 | XC2230051 | OUTER ROTARY HOOK SHAFT | |
| 48 | 137805052 | SPACER | |
| 49 | 137976051 | WASHER 6 | |
| 50 | 014400632 | SET SCREW, SOCKET (CP) M4 × 6 | |
| 51 | XC2555021 | INNER ROTARY HOOK BRACKET ASSY | |
| 52 | XZ0181021 | STOPPER PLATE BLOCK ASSY | CHG |
| 53 | 060400516 | SCREW, BIND M4 × 5 | |
| 54 | 060300816 | SCREW, BIND M3 × 8 | |
| 55 | XC2562121 | LOWER SHAFT B ASSY | CHG |
| 56 | X52664050 | LOWER SHAFT BUSHING | |
| 57 | X51383050 | WASHER,THRUST | |
| 58 | 048060346 | RETAINING RING, E6 | |
| 59 | 137768151 | SET SCREW COLLAR | |
| 60 | 014400432 | SET SCREW, SOCKET (CP) M4 × 4 | |
| 61 | XC2566021 | BUSHING SUPPORTER A | |
| 62 | XC2567021 | BUSHING PRESSER A | |
| 63 | 060401616 | SCREW, BIND M4 × 16 | |
| 64 | XC2569051 | NEEDLE PLATE A | |
| 65 | XC2570021 | STOPPER PLATE | |
| 66 | XC2571021 | F GEAR STOPPER PLATE | |
| 67 | 060260316 | SCREW, BIND M2.6 × 3 | |
| 68 | X50487051 | SCREW M4 | |
| 69 | XC2572021 | DROP KNOB | |
| 70 | XC2573021 | SLIDE SHAFT B | |
| 71 | XC2574021 | SPRING PLATE | |
| 72 | X53169050 | BAND | |
| 73 | 060300416 | SCREW, BIND M3 × 4 | |
| | | | |
| | | FEED MODULE | |

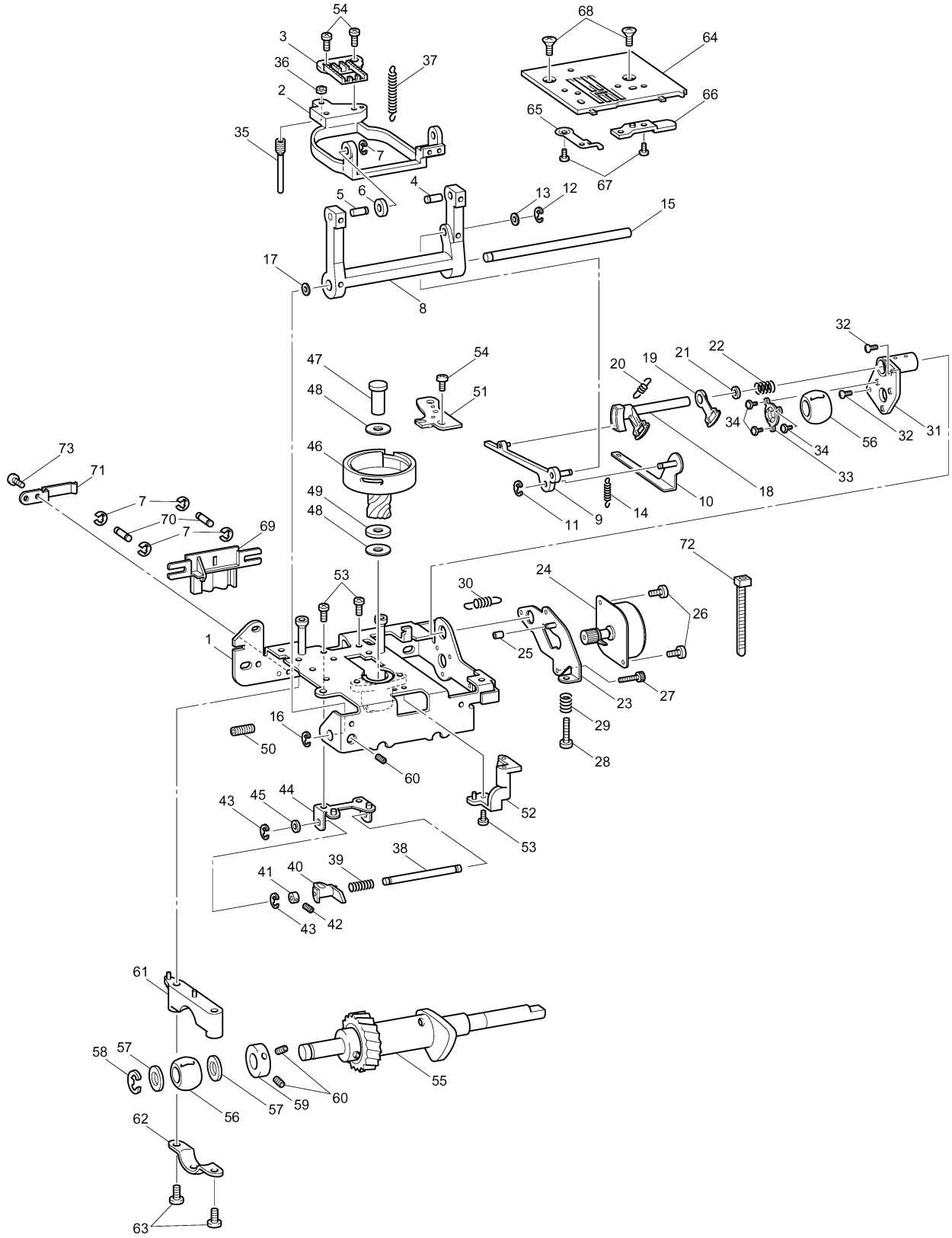
54
3
36
2
35
37
7
6
5
4
68
64
66
65
67
13
12
15
17
8
32
22
21
19
20
47
48
54
51
34
56
32
31
34
33
18
10
14
9
11
46
49
48
73
71
7
70
7
69
72
53
30
24
26
1
25
23
27
29
28
16
50
60
52
53
43
45
44
38
39
40
41
42
43
61
58
57
56
57
59
60
55
62
63

NX200
14C03HF882S60