# SERVICE MANUAL FOR

# XL2120
# XL2121
# XL2130
# XL2140

# XL2220
# XL2230
# XL2240
# XL2250

7.2003.

# CONTENTS


## Disassembly Procedure

Disassembly Procedure ..... 2 - 1
Needle Bar-Presser Unit Assembly ..... 2 - 5
Lower Shaft Unit Assembly ..... 2 - 7
Thread Tension Assembly ..... 2 - 8

## Assembly Procedure

Assembly Procedure ..... 2 - 9
Front Cover ..... 2 - 9
Rear Cover ..... 2 - 10
Thread Tension Assembly ..... 2 - 14
Needle Bar-Presser Unit Assembly ..... 2 - 15
Lower Shaft Unit Assembly ..... 2 - 17

## Adjustment

Adjustment of the Timing Belt Tension ..... 3 - 1
Adjustment of the Motor Belt Tension ..... 3 - 2
Adjustment of the Needle Bar Stopper ..... 3 - 3
Adjustment of the Needle Sidewise Movement (Needle Swing Timing) ..... 3 - 4
Adjustment of the Left/Right Position of Zigzag Needle Down ..... 3 - 5
Left and Right Balance of the Needle Clearance ..... 3 - 6
Adjustment of the BH Left Over Edging (Zero Feed Adjustment) ..... 3 - 7
Adjustment of the zigzag width for BH Right Over Edging ..... 3 - 8
Adjustment of the Feeding for BH Right Over Edging
(Adjustment of Satin Feeding) ..... 3 - 9
Forward/Reverse Adjustment of the Super Stitch Feeding ..... 3 - 10
Adjustment of Forward/Back Position of Needle Against the Needle Hole
in the Presser Foot ..... 3 - 11
Adjustment of the Amount of Needle Bar Rise ..... 3 - 12
Adjustment of the Needle Bar Height ..... 3 - 13
Adjustment of the Needle Clearance ..... 3 - 14
Adjustment of the Presser Bar Height ..... 3 - 15
Adjustment of the Feed Dog Height ..... 3 - 16
Forward/Back and Left/Right Position Adjustment of the Feed Dog ..... 3 - 17
Adjustment of the Position of the Inner Rotary Hook Rotation Prevention
Bracket ..... 3 - 18
Adjustment of the Upper Thread Tension ..... 3 - 19
Adjustment of the Inner Rotary Hook (Lower Thread) Tension ..... 3 - 20
Adjustment of the Thread Winding
(Uneven Bobbin Winding and Amount of Thread Winding) ..... 3 - 21

## Disassembly Procedure

1. Remove the needle plate B and take out the inner rotary hook.
2. Remove the one screw securing the face plate and then remove the face plate to the front.
3. Pull out the selection dial on the front face of the front cover.
4. Remove the screws fastening the front cover, one in the front (giza tite 5 × 16) and six in the back (five giza tite M 5 × 16, and one giza tite M 3 × 32), to remove the front cover.
5. Remove the two screws (taptite, bind B M 4 × 12) to remove the thread tension dial assembly.
6. Remove the one screw (taptite, bind B M 4 × 12) to remove the thread conductor B assembly.
7. Pull out the reverse stitching knob.

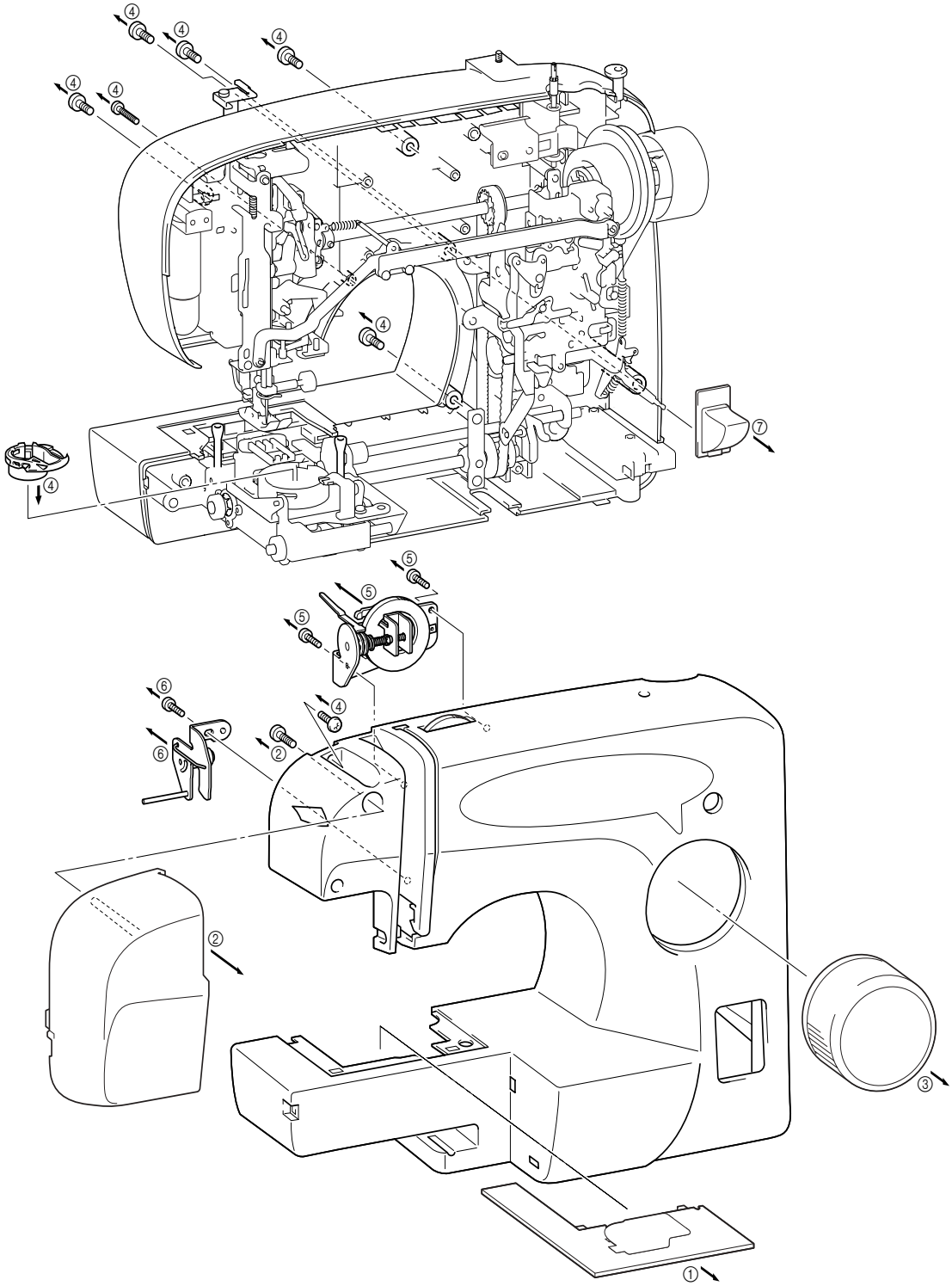

8. Remove the pull spring of the Z linkage. (Ø6 × 22 mm)
9. Remove the retaining ring E3 that links the Z linkage and the selection unit and E5 that links the Z linkage and the needle bar supporter and then remove the Z linkage.
10. Remove the feed transmission spring that fastens the selection unit. (Ø5 × 21 mm)
11. Remove the four screws (three giza tite 5 × 16, and one step screw) that fasten the selection unit and remove the selection unit.
12. Remove the two screws (giza tite 5 × 16) securing the lower shaft metal retainer to remove it.
13. Remove the one screw (giza tite 5 × 16) for the feed transmission holder.
14. Remove the two screws (giza tite 5 × 16) holding the base plate assembly and remove the feed module.
15. Remove the screw holding the lamp and remove the lamp unit. (3 × 20)

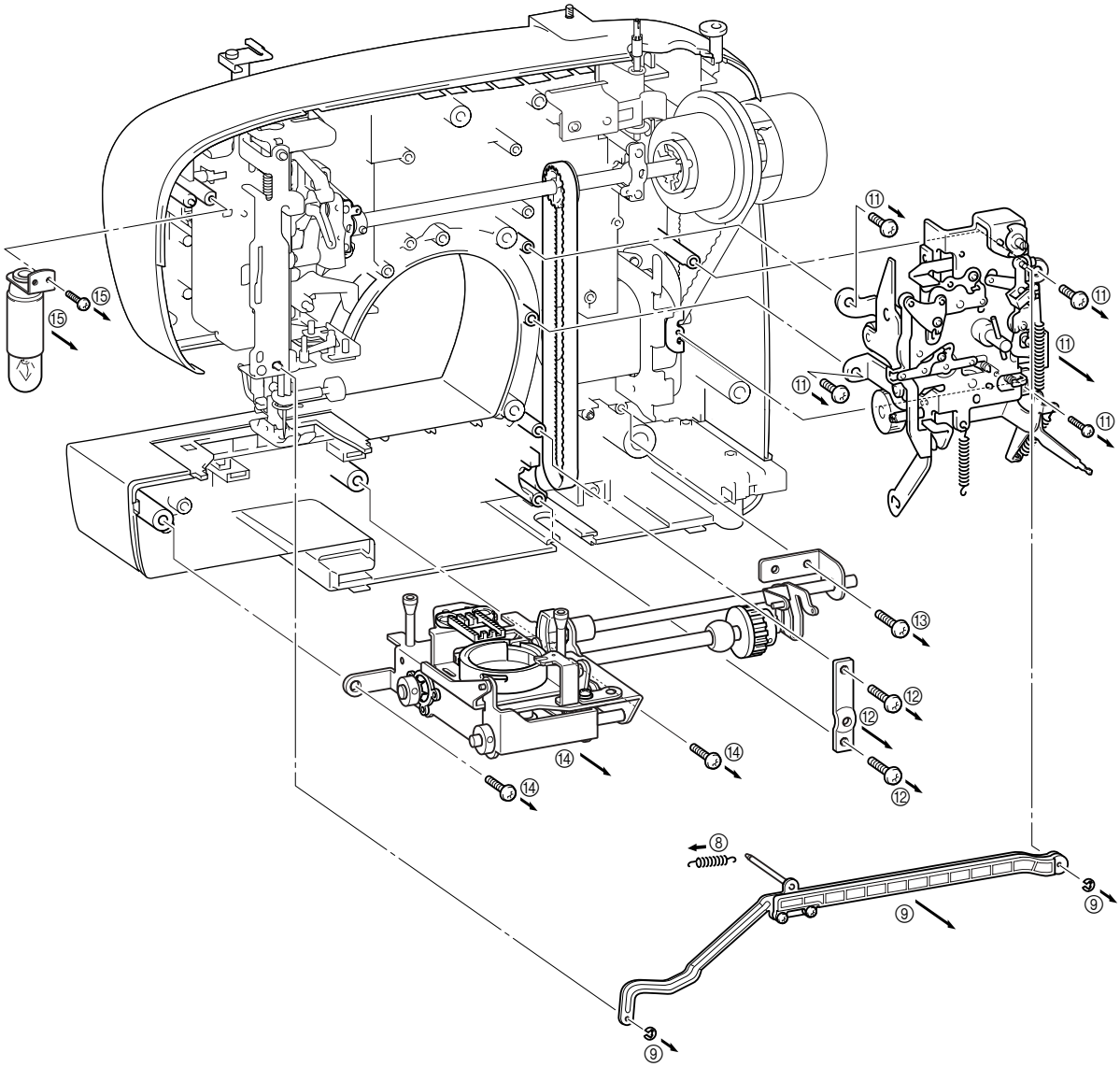

16. Remove the screw for needle clearance adjustment. (2.5 × 25 mm)
17. Remove the four screws (giza tite 5 × 16) securing the upper shaft metal retainer to remove it.
18. Remove the two screws (giza tite 5 × 16) securing the needle bar-presser unit assembly and then remove the upper shaft assembly and the needle bar-presser unit assembly.
19. Remove the tension belt and the motor belt from the needle bar-presser unit assembly.
20. Loosen the screw (set screw, socket (FT) M 5 × 5) for the thread take-up lever crank and separate the upper shaft assembly from the needle bar-presser unit assembly.

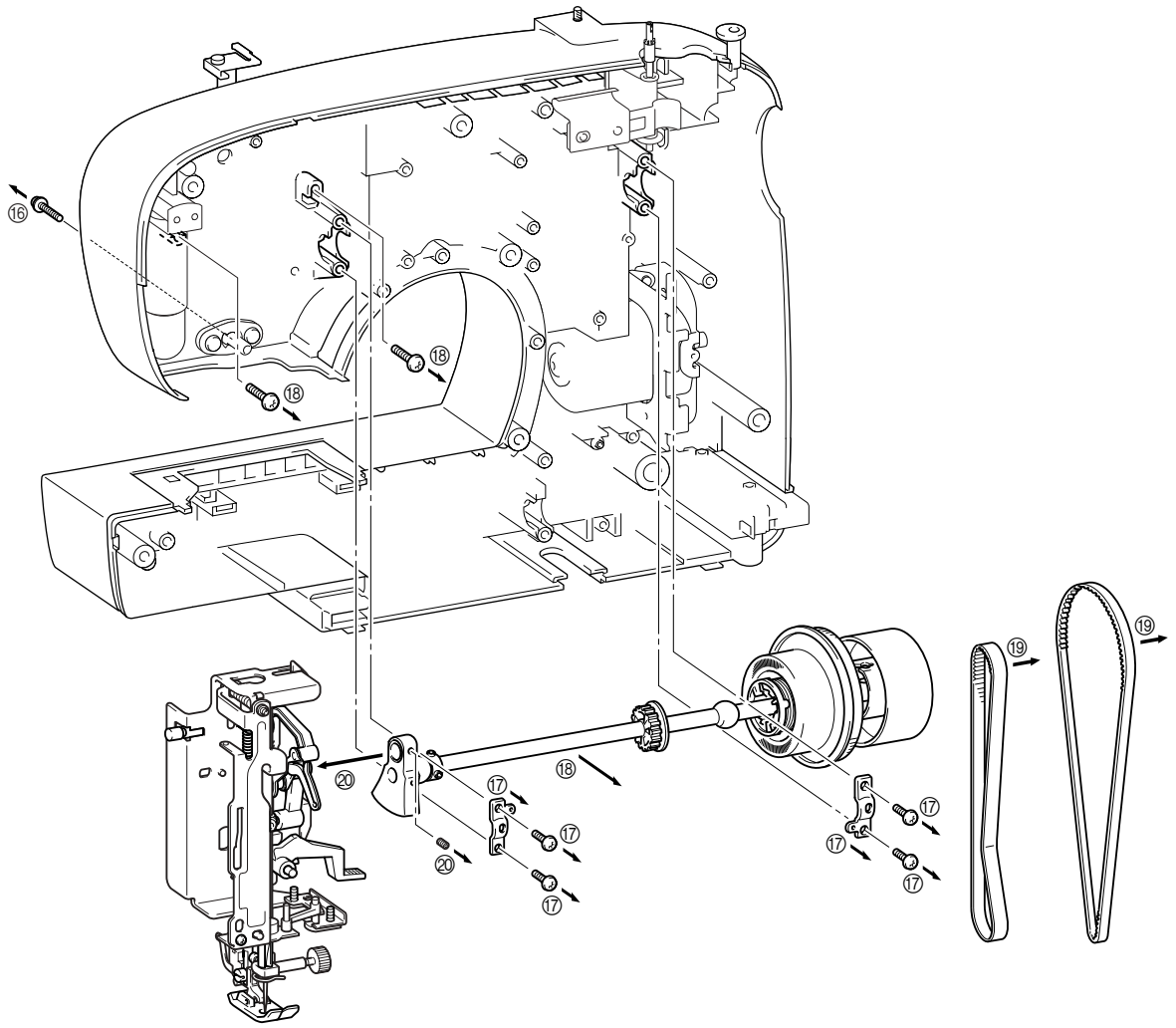

21. Remove the one screw (giza tite 5 × 16) and remove the cord retainer and the thread winding retainer.
22. Remove the two screws (giza tite 5 × 16) to remove the bobbin assembly.
23. Remove the one screw (taptite, bind B M 4 × 10) to remove the shield wire clip.
24. Remove the two screws (giza tite 5 × 16) to remove the motor.
25. Remove the two screws (screws, pan (S/P washer) M 3 × 20) to remove the three pole lamp socket.
26. Remove the two screws (taptite, bind B M 4 × 10) to remove the Plate apring, the adjusting plate, and the adjusting screw.
27. Remove the spool pin spring and remove the spool pin.
28. Remove the one screw (giza tite 5 × 16) to remove the lower thread guide assembly.
29. Remove the two screws (giza tite 4 × 14) to remove the bobbin retainer.

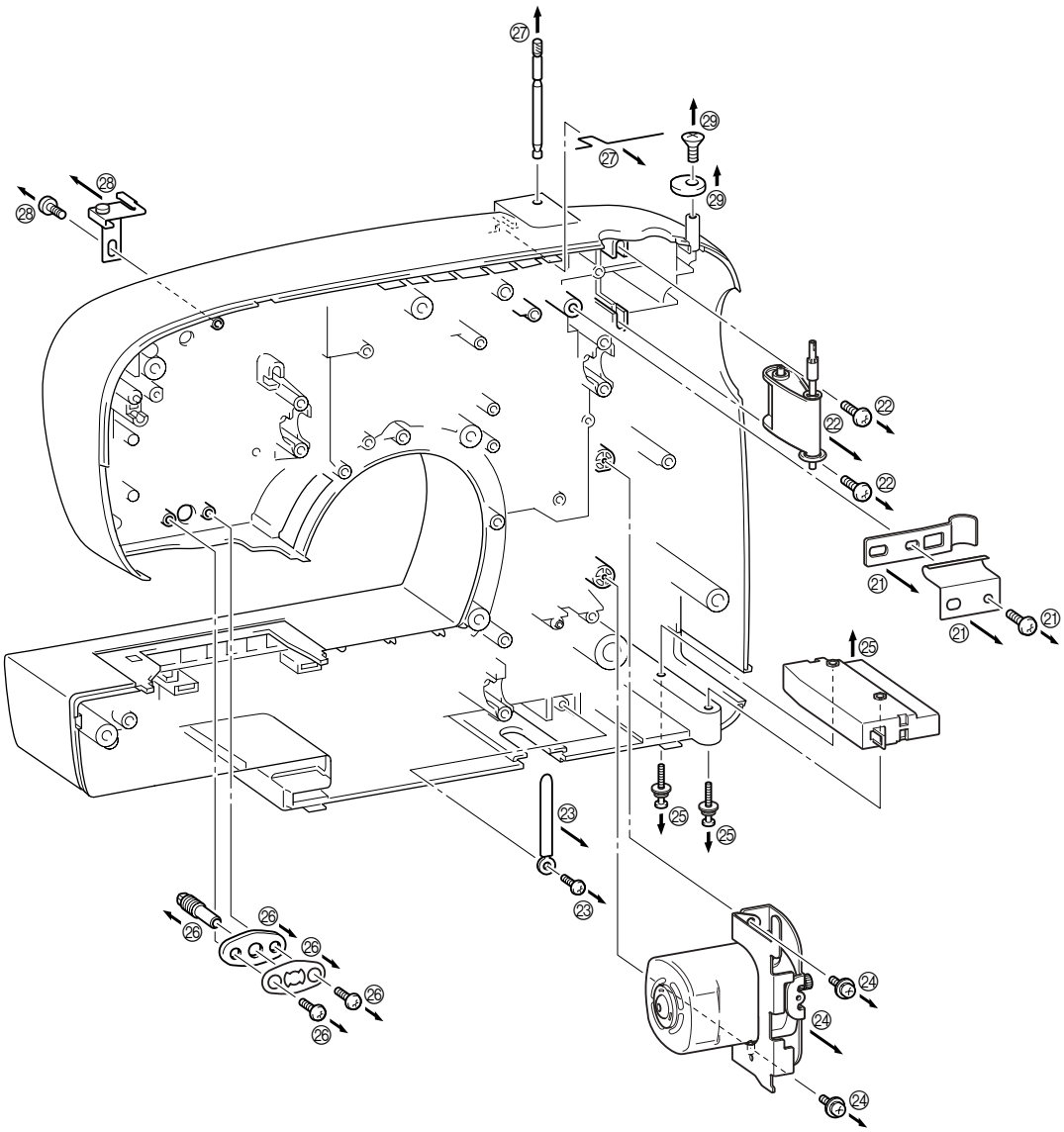

## Needle Bar-Presser Unit Assembly

1. Remove the needle bar crank rod.
2. Remove the screw (screws pan (S/P washer) M 3 × 8DB) of the stud for thread take-up lever supporter by pulling it out to the right, and them remove the thread take-up lever supporter and the dome spring washer.
3. Remove the thread take-up lever body and the needle bar crank from the thread take-up lever supporter.
4. Remove the screw and the spring at the top of the needle bar supporter and remove the needle bar supporter from the base holder assembly.

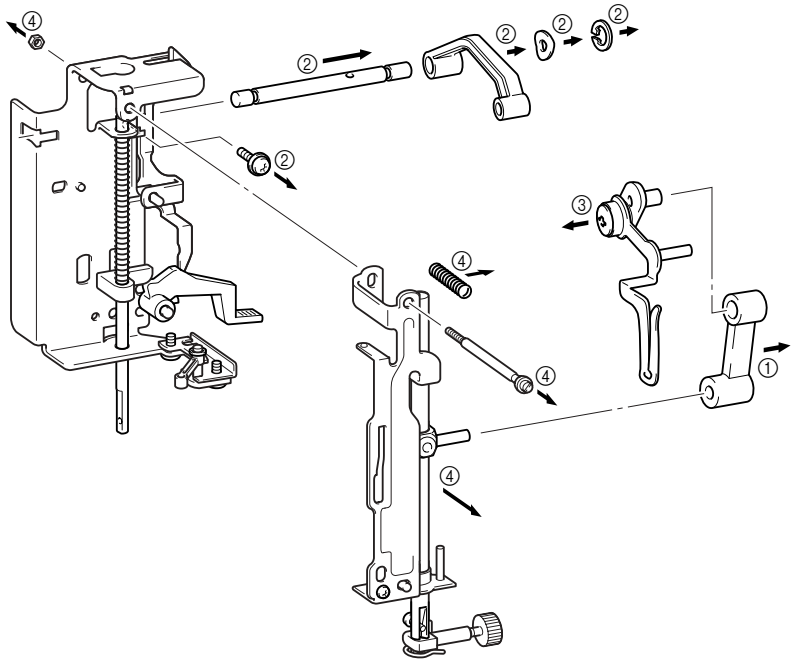

5. Loosen the one screw (set screw, socket (FT) M 4 × 4) securing the needle bar clamp to remove the needle bar assembly.
6. Remove the one screw (size 2.38) of the needle bar and remove the needle clamp, the needle bar thread guard, and the needle set screw.
7. Remove the one screw (screws pan (S/P washer) M 3 × 8DA) at the bottom of the needle bar supporter and remove the Z fine adjusting plate from the needle bar supporter.
8. Remove the screw (3.57L) to remove the thread take-up lever supporter and the stud for thread take-up lever supporter.
9. Loosen the screw (set screw, socket, (CP) M 5 × 8) securing the presser bar clamp to remove the presser bar.
10. Remove the one screw (bolt, socket M 3 × 6) for the stopper to remove the stopper.
11. Remove the one screw (bolt, socket M 3 × 6) for the needle bar supporter stud holder to remove the needle bar supporter stud holder assembly.
12. Remove the retaining ring E5 and remove the presser lifter.
13. Remove the retaining ring E3 and remove the thread loosening lever.
14. Remove the one screw (screw, bind M 4 × 6) for the lamp holder to remove the lamp holder.

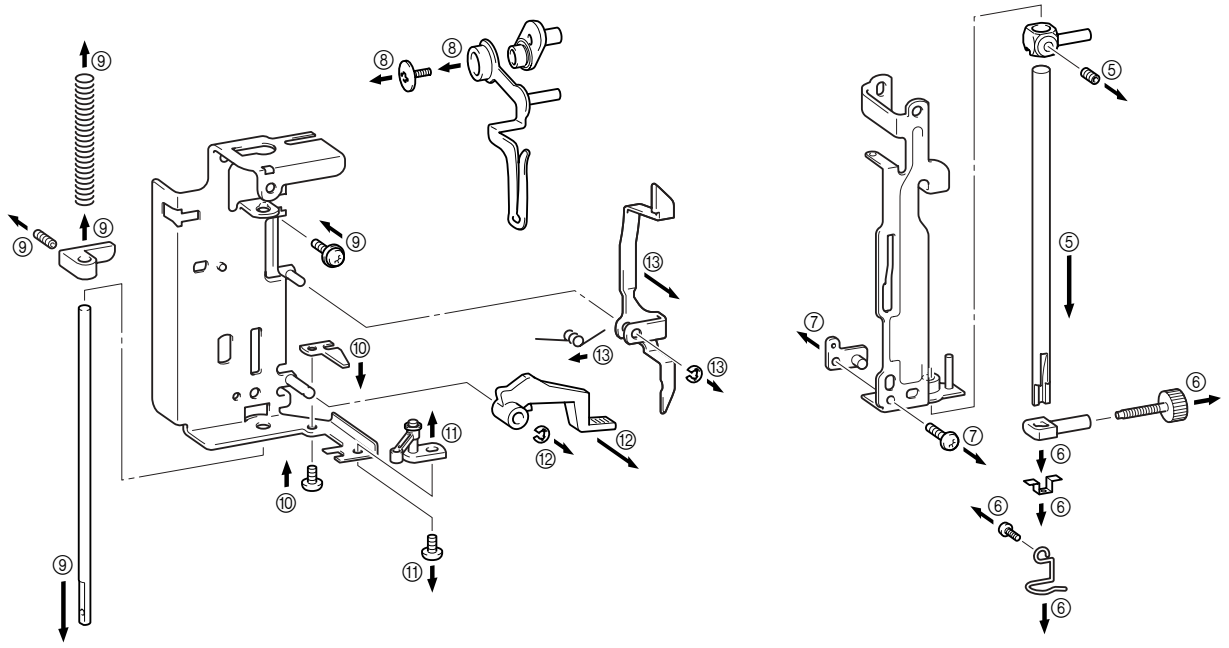

## Lower Shaft Unit Assembly

1. Remove the retainer ring E4 and loosen the screw (screw, bind M 4 × 14) to remove the feed transmission lever.
3. Remove the two screws (M4) to remove the needle plate A.
4. Remove the one screw (screws pan (S/P washer) M 3 × 6) and remove the inner rotary hook rotation prevention bracket assembly.
5. Remove the two screws (screw, bind M 3 × 6) to remove the feed dog.
6. Loosen the screw (set screw, socket (CP) M 4 × 4) for the rotary hook shaft receptacle and remove the rotary hook assembly.
7. Remove the three retainer rings E3 from the vertical feed shaft and then remove the vertical feed shaft and the feed adjuster.
8. Loosen the two screws (set screw, socket (CP) M 4 × 4) on the lower shaft set collar and then remove the set collar.
9. Remove the one screw (screw, bind M 3 × 4) and remove the feed auxiliary plate.
10. Remove the three screws (screw, bind M 3 × 6) to remove the metal retainer B.
11. Remove the metal.
12. Remove the retainer ring E6 from the timing pulley side of the lower shaft, loosen the screw (set screw, socket (CP) M 4 × 4), and then remove the timing pulley.
13. Remove the lower shaft assembly.
14. Remove the retainer ring E5 from the horizontal feed shaft and then remove the horizontal feed shaft.
15. Remove the feed base tension spring (Ø3 × 10.5 mm).
16. Remove the two screws (screw, bind M 4 × 20) to remove the rotary hook shaft receptacle.
17. Remove the retainer ring shaft CS and then remove the feed arms A and B from the feed base assembly.
18. Remove the retainer ring shaft CS and the feed arm B.
19. Remove the feed arm receptacle.
20. Remove the feed adjuster shaft assembly.

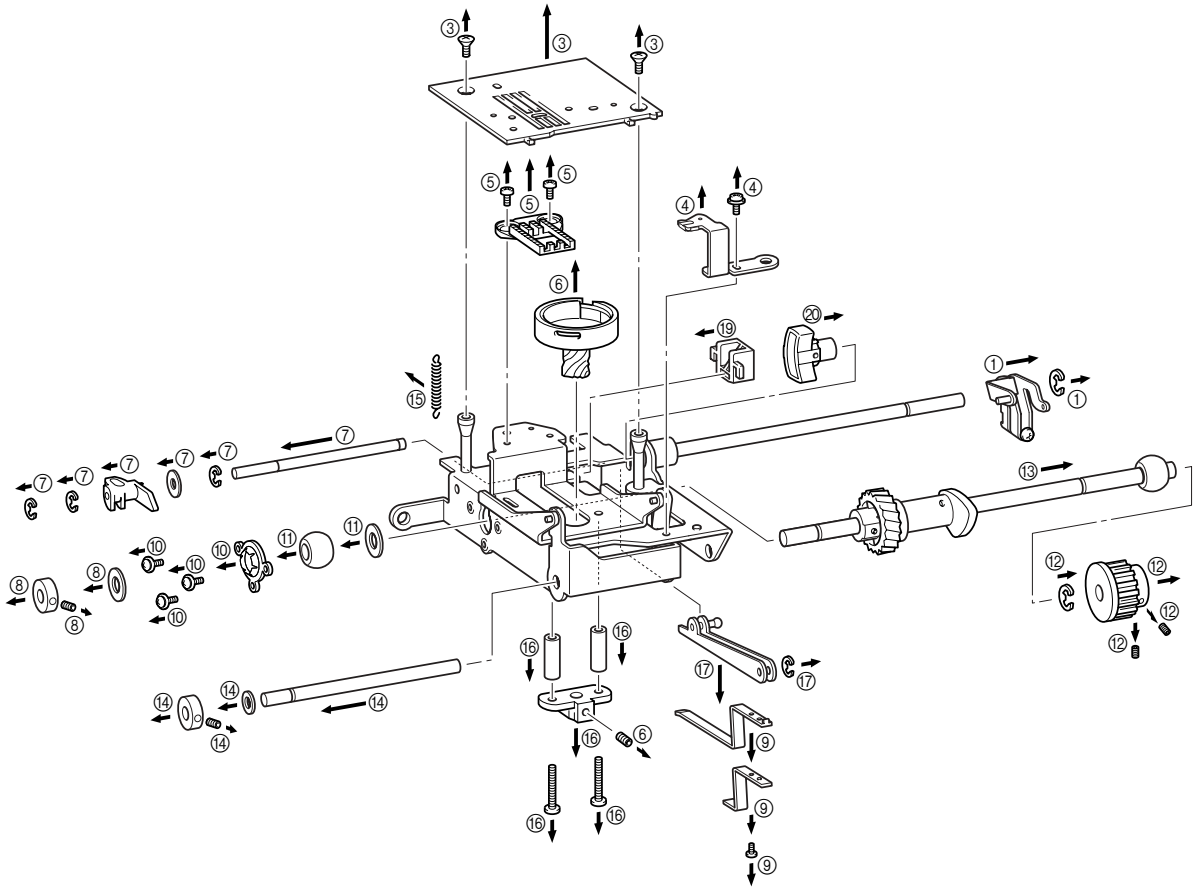

## Thread Tension Assembly

1. Remove the holding screw (screw, pan M 3 × 4) to remove the notch spring.
2. Set the thread tension dial to 9 and remove the thread tension dial shaft.
3. Remove the thread loosening plate.
4. Remove the thread tension adjusting screw from the thread loosening plate.
5. Remove the following items in the following order: the spring, the washer, the tension spring receptacle, the thread tension stud, the washer, the thread tension disc B, and the thread tension disc A.
6. Remove the one screw (screws pan (S/P washer) M 3 × 18DA) and remove the thread take-up spring case and the thread take-up spring.

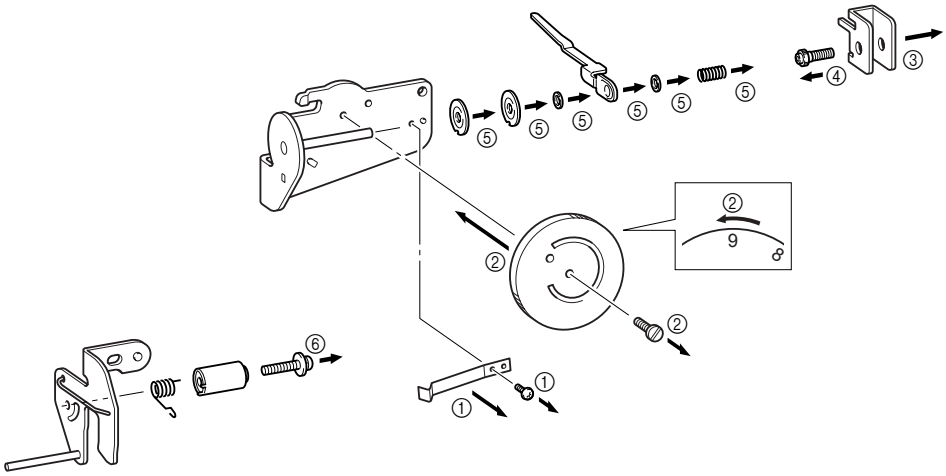

## Assembly Procedure

Assemble and install the units first before attaching the front cover and the rear cover

## Front Cover

1. Insert the thread tension dial into the square hole of the front cover, set the thread conductor, and secure with the two screws (taptite, bind B M 4 × 12).
2. Insert the tip of the wire of the thread conductor B assembly by aligning it against the positioning groove of the front cover and secure with the screw (taptite, bind B M 4 × 12) that sets the protrusion of the thread conductor B into the hole in the front cover.

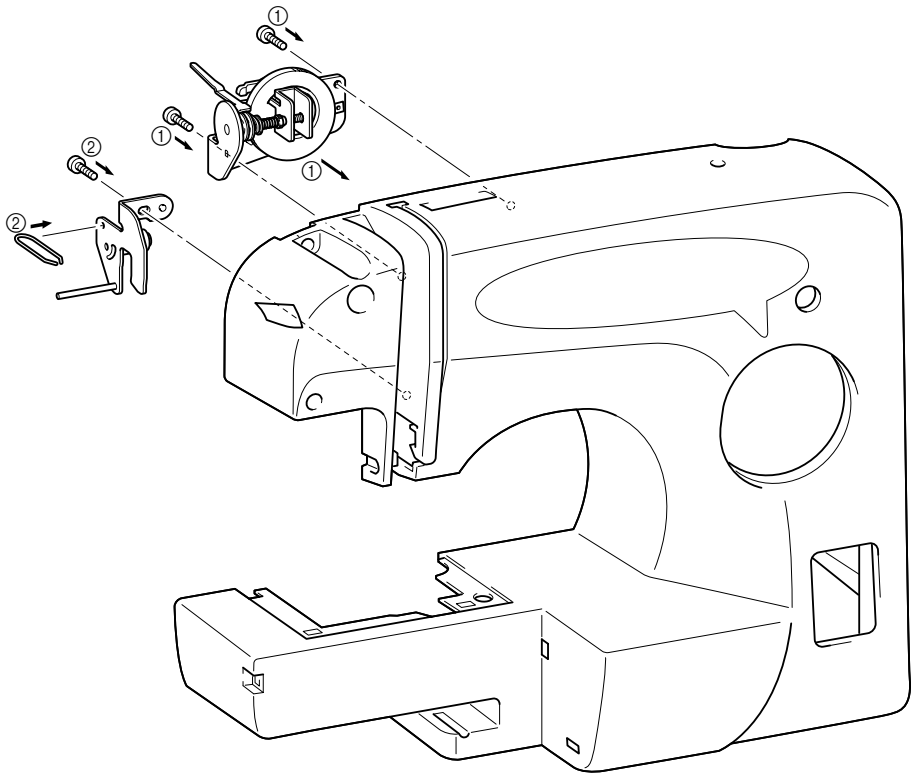

## Rear Cover

1. Temporarily fasten the lower thread guide assembly with the one screw (giza tite 5 × 16).
2. Insert the spool pin into the rear cover and then attach the spool pin spring onto it.
3. Attach the adjusting plate, Plate apring, and the adjusting screw in this order and secure them with the two screws (taptite, bind B M 4 × 10).
4. Place the foot of the motor holder underneath the motor and secure it with the two screws (one giza tite 3 × 10, and two giza tite 5 × 16).
5. Fasten the three pole socket assembly with the screw (pan head screw with spring and plain washers, size 3 × 20).
6. Route and connect the lamp unit harness.
7. Secure the bobbin assembly with the two screws (giza tite 5 × 16).
8. Fasten the cord retainer and the thread winding spring with the one screw (giza tite 5 × 16).

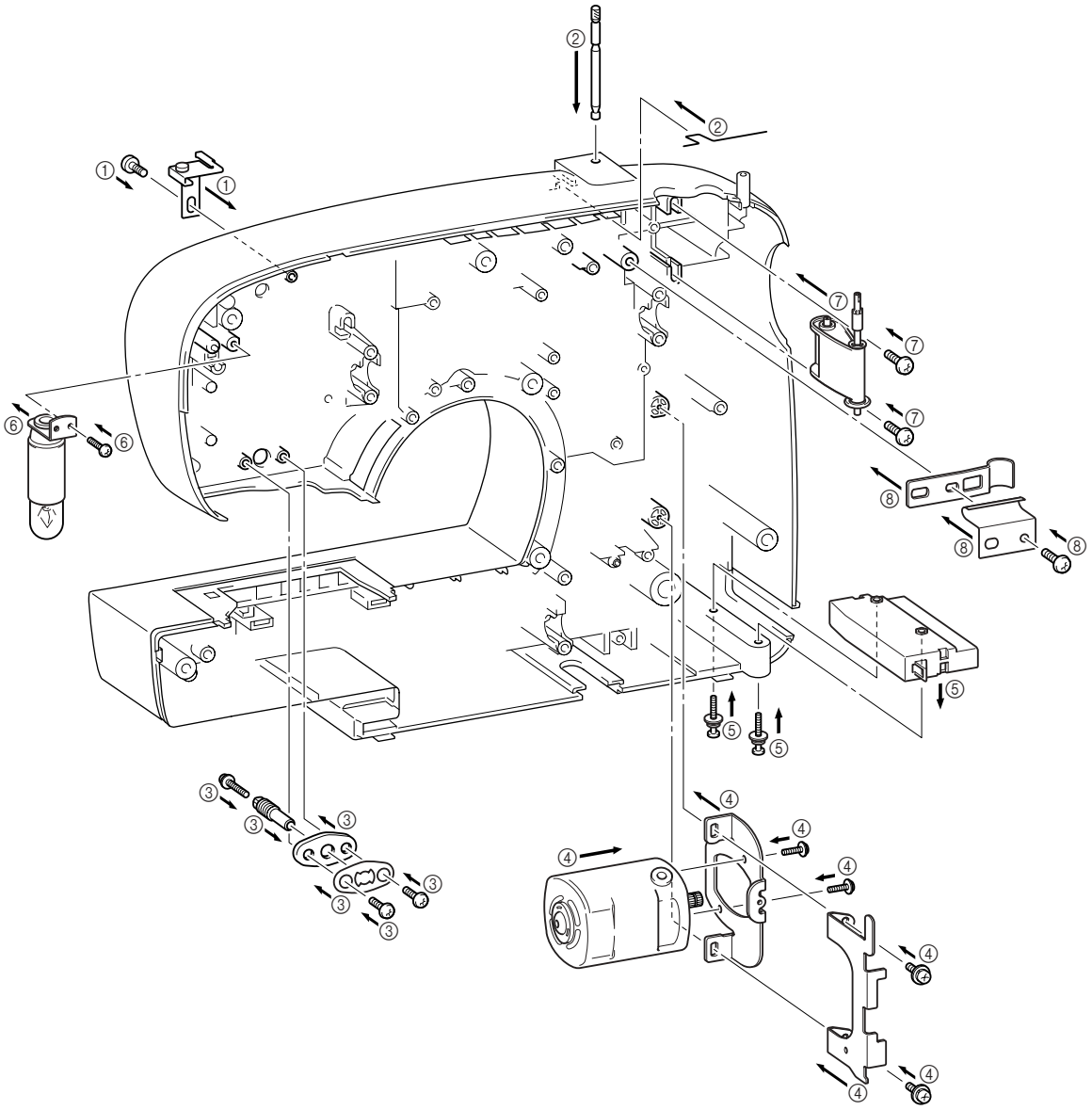

9. Loosen the screw (set screw, socket (FT) M size 5 × 5) for the thread take-up lever crank at the screw alignment position to connect the upper shaft assembly from the needle bar-presser unit assembly.
10. Attach the tension belt and the motor belt to the upper shaft assembly and the needle bar-presser unit assembly.
11. Attach the upper shaft assembly and the needle bar-presser unit assembly to the front cover and secure with the two screws (giza tite 5 × 16) on the side of the needle bar-presser. Then place the upper shaft metal retainer on the upper shaft metal and fasten it with the screw (giza tite 5 × 16).

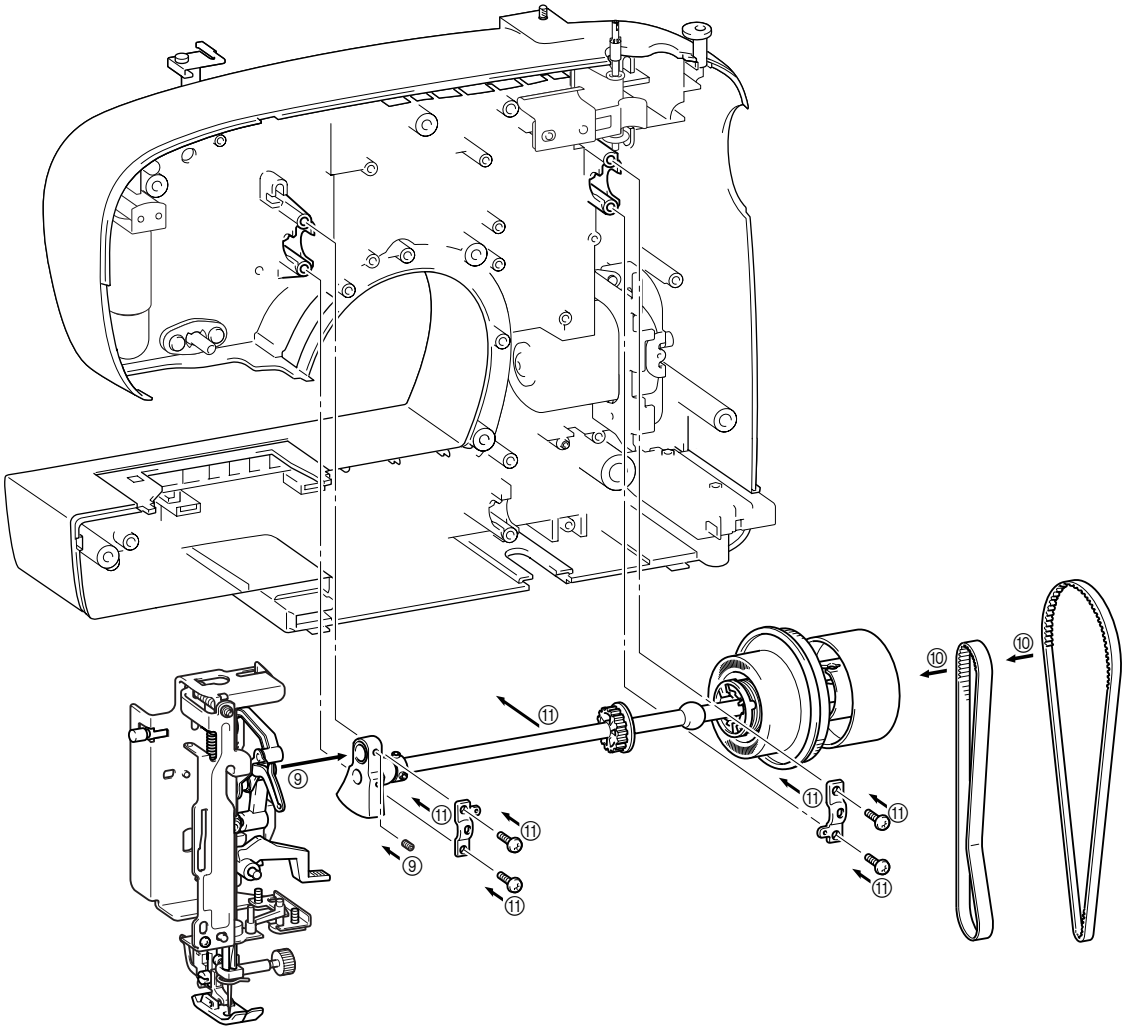

12. Temporarily fasten the screw for needle clearance adjustment. (2.5 × 25 mm)
13. Secure the lamp unit to the base holder assembly with the screw (3 × 20).
14. Fit the feed module in the rear cover and secure it with the two screws (giza tite 5 × 16) of the base plate assembly. Then place the lower shaft metal retainer on the lower shaft metal and fasten it with the screw (giza tite 5 × 16).
15. Put the worm pulley of the selection unit through the timing belt and set it in the mounting position on the rear cover.
16. Secure the selection unit with the four screws (three giza tite 5 × 16, and one giza tite 5 × 16).
17. Install the worm pulley of the selection unit.
18. Attach the ends of the pull spring of the feed transmission lever to the middle shaft of the Z linkage and the upper shaft metal. (Ø5 × 21 mm)
19. Attach the Z linkage to the shafts located at upper right of the selection unit and below the needle bar supporter.
20. Attach the retaining ring E5 that links the Z linkage and the needle bar supporter.
21. Attach the retaining ring E3 that links the Z linkage and the selection unit.
22. Attach the pull spring of the Z linkage. (Ø6 × 22 mm)

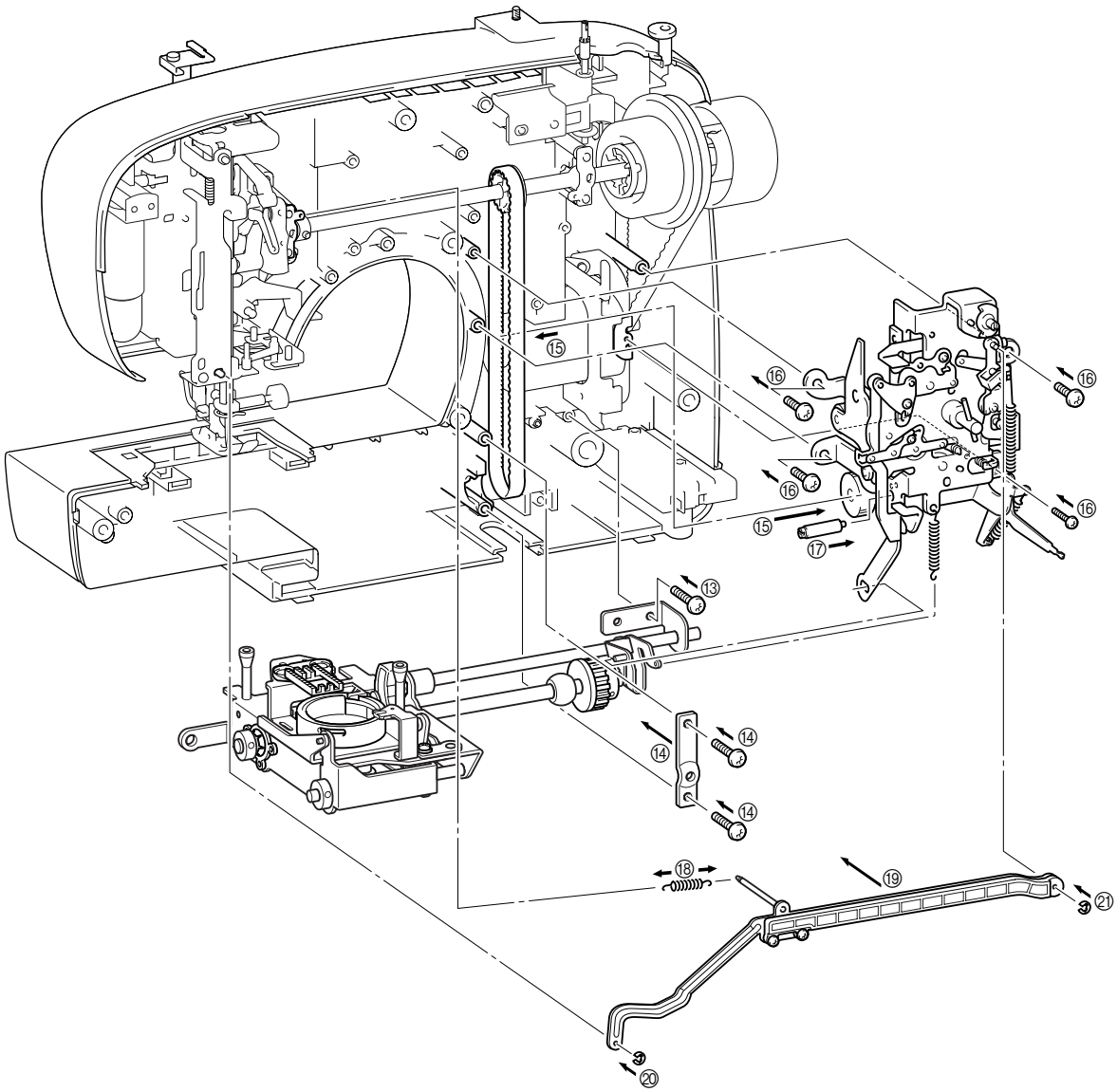

23. Install the reverse stitching knob.
24. Tighten the screws for fastening the front cover, one in the front (giza tite 5 × 16) and six in the back (five giza tite 5 × 16, and one giza tite 3 × 32), to secure the front cover.
25. Attach the selection dial on the front face of the front cover.
26. Fasten the face plate with the one screw for holding it.
27. Install the inner rotary hook and attach the needle plate B.

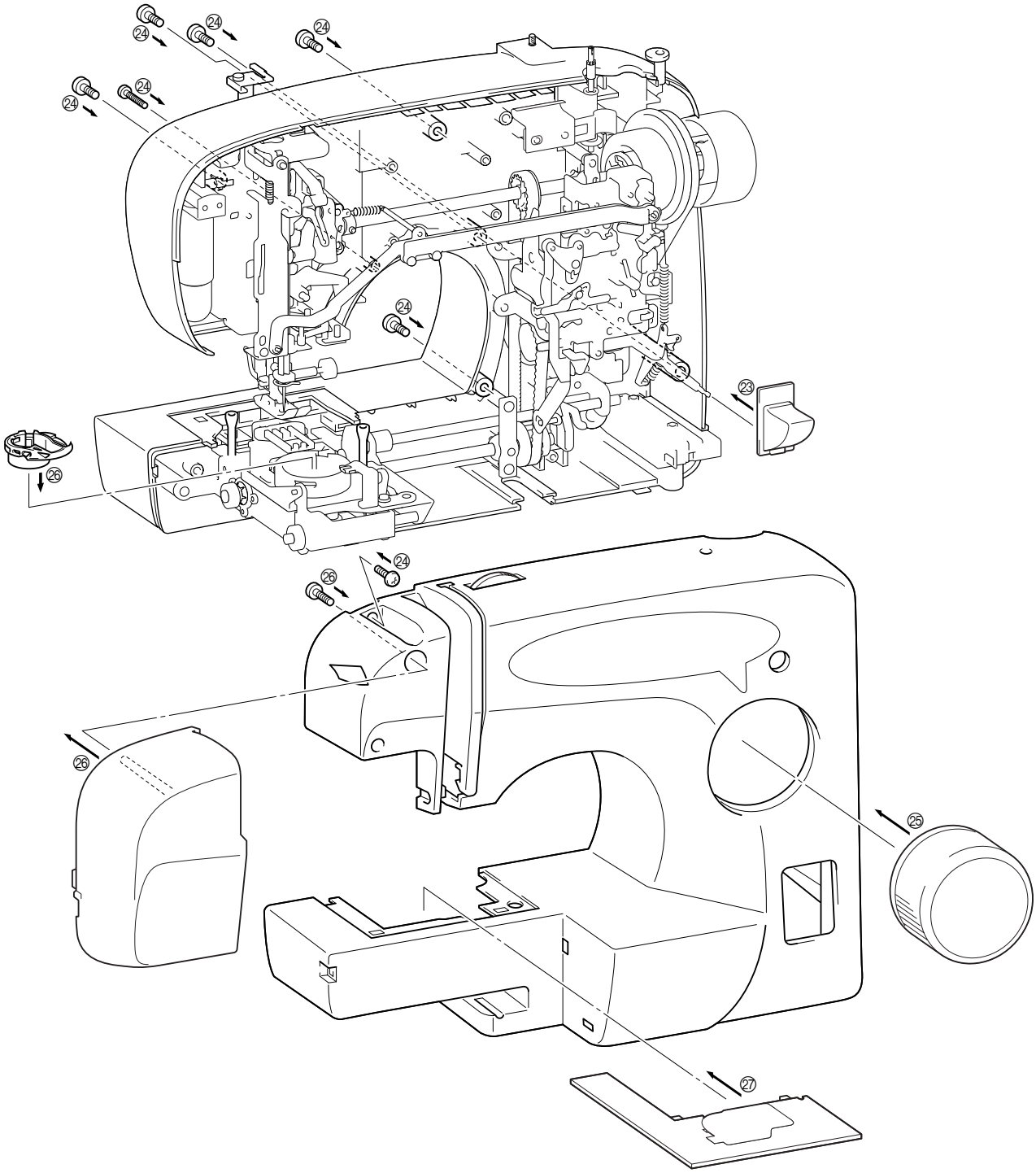

## Thread Tension Assembly

1. Mount the following items in the following order: @@ (the thread tension stud?), the thread tension disc A, the thread tension disc B, the washer, the tension spring receptacle, the washer, and the spring.
2. Mount the thread tension adjusting screw on the thread tension stud aligning it to the thread tension cam groove in the thread tension dial.
3. Set the thread tension dial to 9 and attach the thread tension dial shaft.
4. Align the notch spring against the oval hole and secure it with the screw (screw, pan M 3 × 4).
5. Attach the thread take-up spring in the second hole from the bottom of the thread take-up spring case so that the thread guard side fits between two protrusions of the spring case.
6. Insert the positioning protrusion of the thread take-up spring case assembly into the square hole of the thread conductor B, shift it all the way up in the square hole, and secure it with the one screw (screw, pan (S/P washer) M 3 × 18DA).

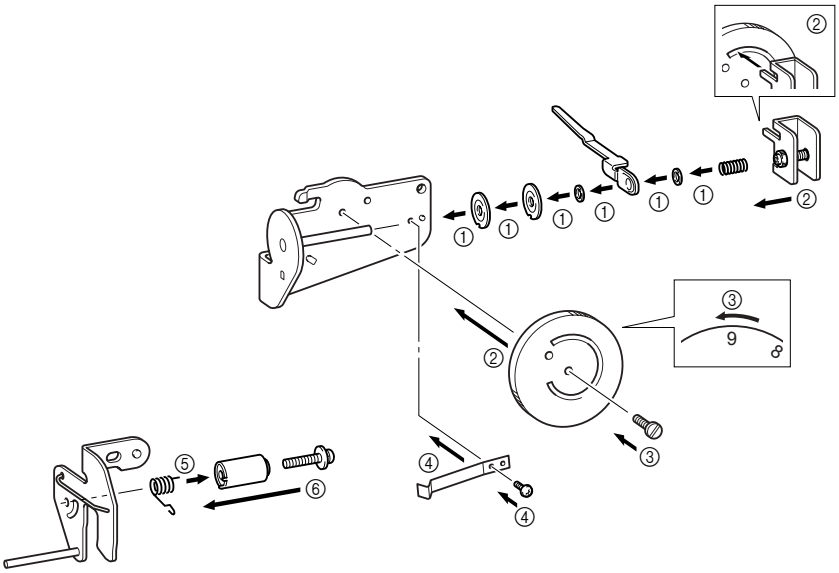

## Needle Bar-Presser Unit Assembly

1. After setting the lever spring in the letter V direction in the U-bend part of the thread loosening lever and inserting into the base holder shaft, attaché the retaining ring CS4. (The lever spring should be rested on the base holder on the left side and on the upper side of the U-bend part on the right side.)
2. Insert the presser lifter in the presser lifter shaft and attach the retainer ring E4.
3. Align the protrusion of the needle bar stopper against the U groove of the base holder and temporarily fasten it with the one screw (bolt, socket, M 3 × 6) from the back.
4. Set the screw (set screw, socket (CP) M 5 × 8) on the presser bar clamp, insert the presser bar into the base holder, the presser bar clamp, and the spring in this sequence, and temporarily fasten the screw (set screw, socket (CP) M 5 × 8).
5. Align the reference hole for fixing against the protrusion of the base holder and secure it with the one screw (screw, bind B M 4 × 6) from the back.
6. Attach the retaining ring E5 to the stud for thread take-up lever supporter.
7. Insert the dome spring washer into the stud for thread take-up lever supporter with its convex side facing the retaining ring.
8. Insert the thread take-up lever supporter into the stud for thread take-up lever supporter.
9. Insert the stud for thread take-up lever supporter into the base holder and secure it with the one screw (Phillips, pan head screw with spring and plain washers, size 3 × 8DB).
10. Insert the riveting stud for the Z fine adjusting plate from behind the needle bar supporter and temporarily fasten it with the screw (Phillips, pan head screw with spring and plain washers, size 3 × 8DB).
11. Insert the plate to prevent reverse attachment of needle from behind the needle bar clamp (the cut surface) until it reaches above the needle clamp.
12. Insert the needle clamp into the needle bar, bring it up as far as it goes, and temporarily fasten it with the needle set screw.
13. Secure the needle bar thread guard with the 2.38 screw.
14. Temporarily insert the needle bar into the needle bar supporter, run it through the needle bar clamp of the needle bar crank rod assembly, and temporarily fasten with the screw (set screw, socket (FT) M 4 × 4).

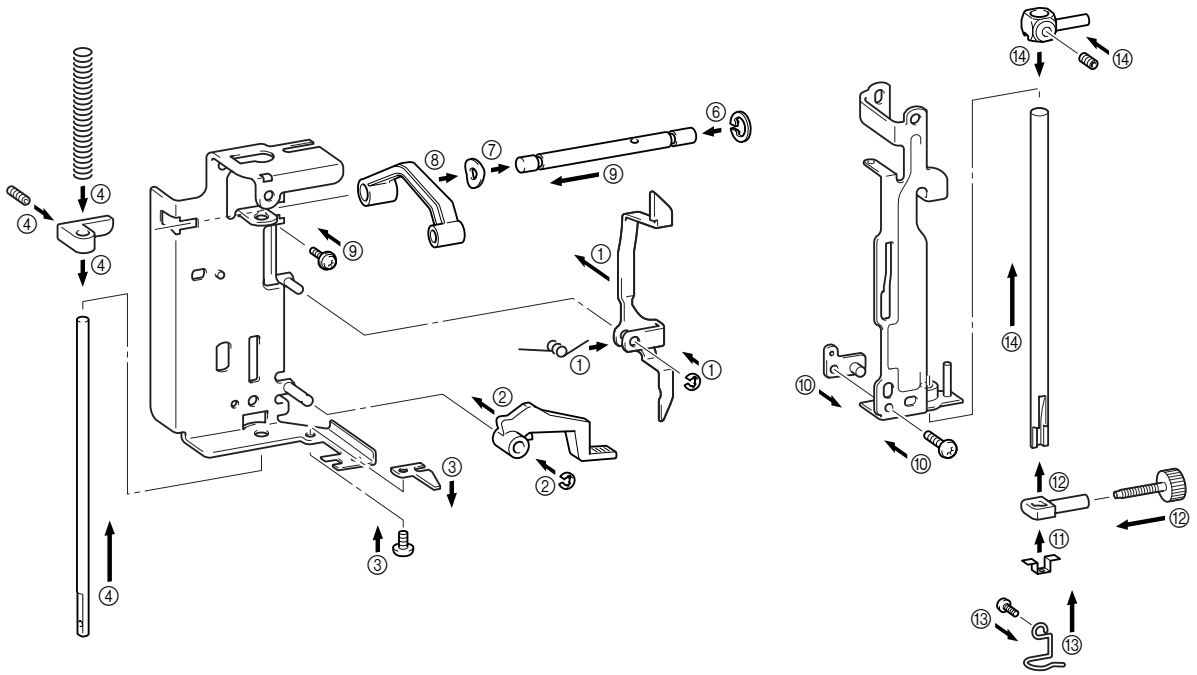

15. Set the needle bar supporter in the base holder, insert the push spring into the gap between the needle bar supporter and the base holder, and force the needle bar supporter stud in.
16. Attach the lock nut to the needle bar supporter stud, turn it until it levels with the base holder, and then tighten it.
17. Temporarily insert the needle bar supporter arm into the pin of the needle bar supporter.
18. Insert the needle bar supporter arm into the riveting pin for the needle bar supporter stud holder and attach the retaining ring E2.
19. Insert into the U groove of the base holder of the needle bar supporter stud holder and temporarily fasten with the one screw (bolt, socket M 3 × 6) approximately in the center of the oval hole of the needle bar supporter stud holder.
20. Assemble with the thread take-up lever body and the needle bar crank and fasten with the Phillips, flat countersunk head screw, size 3.57.
21. Insert the riveting stud of the thread take-up lever body for the thread take-up lever supporter into the thread take-up lever supporter.
22. Insert the needle bar crank rod in to the needle bar crank and the needle bar clamp shaft.

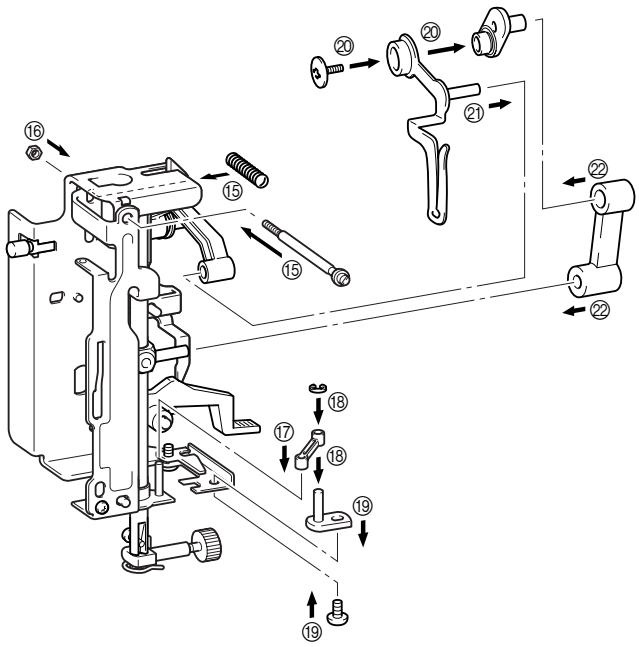

## Lower Shaft Unit Assembly

1. Insert the push spring in the feed adjuster assembly which is then inserted into the shaft receptacle of the base plate from the left.
2. Insert the feed arm receptacle to the end face of the base plate.
3. Snap on the retainer ring E6 in the retainer spring groove on the left of the lower shaft and attach the thrust washer on the shaft from the left.
4. Insert the lower shaft assembly into the base plate.
5. Attach the lower shaft metal on the left of the lower shaft, set the metal retainer B, and secure with the three screws (screws, bind M 3 × 6).
6. After attaching the thrust washer and the set collar on the left of the lower shaft, slide the set collar toward the metal, and tighten the screw (set screw, socket (CP) M 4 × 4).
7. Insert the vertical feed shaft into the base plate, slide the vertical finger and the washer on the shaft, and attaché the retainer rings E3 on the inner left of the base plate as well as outside of the vertical finger (on both the left and the right).

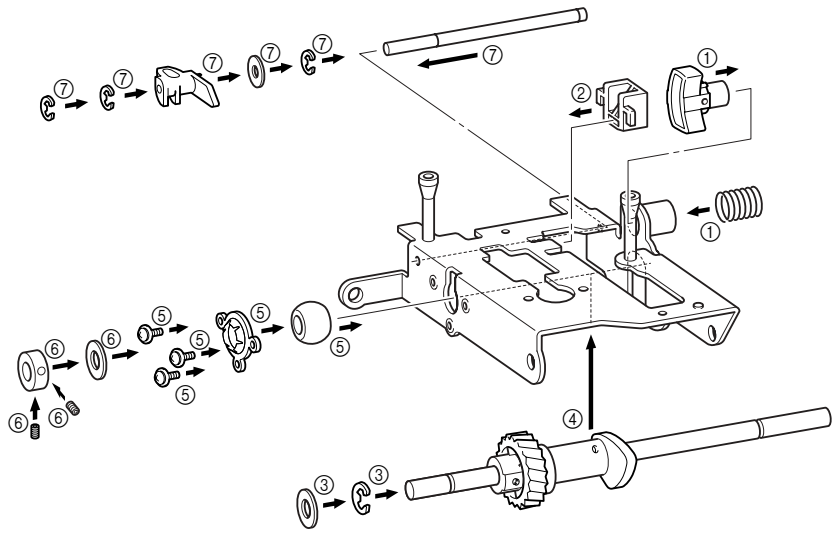

8. Attach the polyslider first and then the feed arm B on the riveting stud of the feed arm A, and apply the retainer ring shaft CS.
9. Insert the feed arms A and B assembly into the base plate from below, and place the feed regulator slide shaft inside the feed adjuster.
10. After inserting the polyslider between the feed arm A and the base plate, insert the horizontal feed shaft from the left.
11. Snap on the retainer ring E5 to the horizontal feed shaft from inside of the base plate.
12. Slide the polyslider and the set collar on the horizontal feed shaft from the left, place them on the left hand side, and tighten the two screws (set screws, socket, CP, size 4 × 4).
13. Tighten the screw (set screw, socket (CP) M 4 × 10) on the vertical adjuster.
14. Assemble the screw (set screw, socket (CP) M 4 × 10) with the lock nut, drive it into the feed base, and then tighten the lock nut.
15. Slide the feed base on riveting stud of the feed arm A and snap on the retainer ring shaft CS to the shaft on the left hand side.
16. Attach the vertical rod between the vertical adjuster and the vertical finger.
17. Attach the feed tension spring on the feed base and the base plate.
18. Align the protrusion of the feed auxiliary plate B against the groove in the feed auxiliary plate and fasten with the screw (screws, bind M 3 × 4).
19. Attach the lower shaft metal to the right hand side of the lower shaft and snap on the retainer ring E6 in the retainer ring groove on the inner side of the lower shaft.
20. Turn the lower shaft so that the spring pin of the lower shaft gear is at its lowest position and the horizontal feed cam faces to the front. Slide the timing pulley D on the shaft with the pulley's screw head facing to the right, position the pulley so that its screw (set screw, socket (CP) M 5 × 5) faces to the front and the other screw to the top, and then temporarily tighten the screws.
21. Set the Class 2 nut 4 on the bottom side of the feed transmission lever and temporarily fasten with the screw (screws, bind 4 × 14).
22. Attach the feed transmission lever to the feed adjuster shaft, snap on the retaining ring E4 in the retainer ring groove on the right, slide the feed transmission lever toward the retainer ring, and temporarily fasten it.

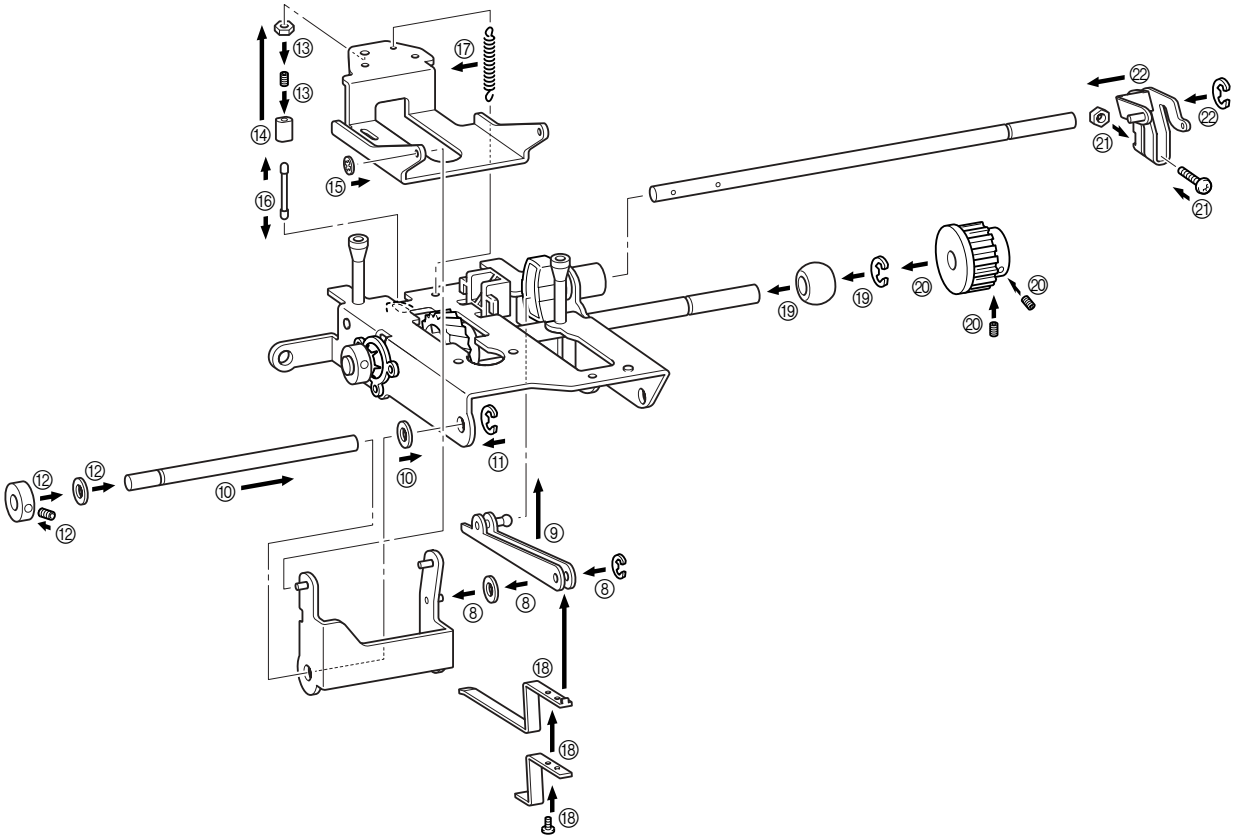

23. Temporarily insert the screw (set screw, socket (CP) M 4 × 4) in the rotary hood shaft receptacle and temporarily fasten the rotary hood shaft receptacle with the screw (screw, pan (S/P washer) M 4 × 22).
24. While the spring pin of lower shaft gear facing down and the horizontal feed can facing to the front, insert the rotary hook so that is reference point faces to the front and tighten the screw (set screw, socket (CP) M 4 × 4).
25. Verify that there is reasonable backlash between the rotary hook and the lower shaft. (The backlash along the perimeter should be 0.8 mm max.)
26. Attach one end of the backlash eliminating spring to the same hole in the feed base as for the feed base tension spring and the other end to the feed base plate.
27. Secure the feed dog with the screw (screw, bind M 3 × 6).
28. Temporarily fasten the needle plate A with the M4 screw.
29. Align the mounting hole of the inner rotary hook rotation prevention bracket against the protrusion and temporarily fasten it with the screw (screw, pan (S/P washer) M 3 × 6).

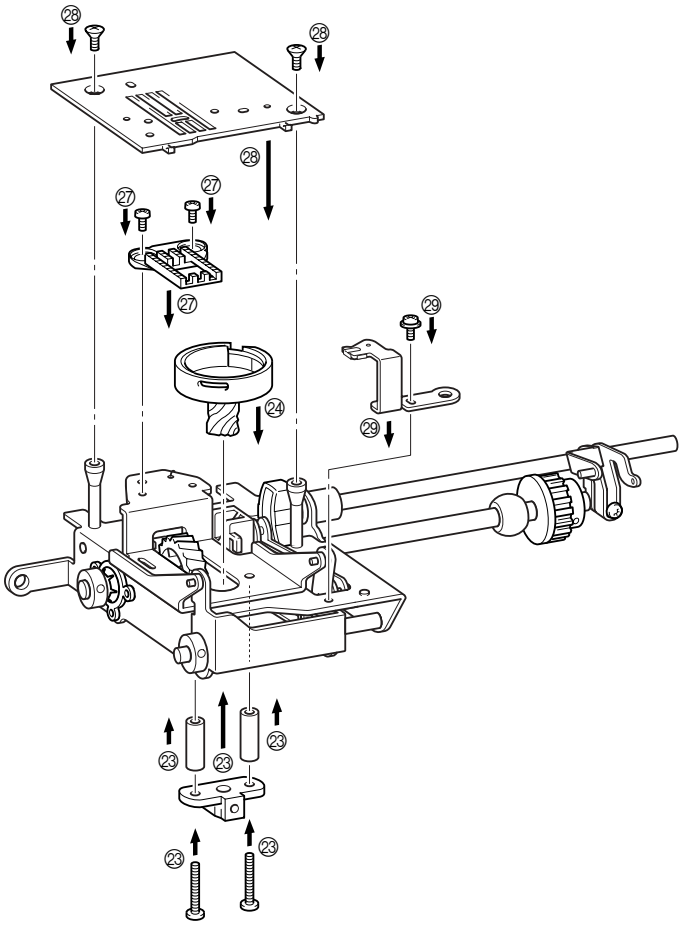

## 1. Adjustment of the Timing Belt Tension

- When pulling on the middle portion of the timing belt with a force of 3 N (300 g), there should be a slack of 3 to 4 mm.

① Loosen the screw (Screw, pan (S/P washer) M 4 × 8 DA) fastening the tension pulley holder.

② Adjust the belt tension by moving the tension pulley holder up or down.

③ Tighten the screw (Screw, pan (S/P washer) M 4 × 8 DA) to secure the tension pulley holder.

④ Check the timing belt tension again.

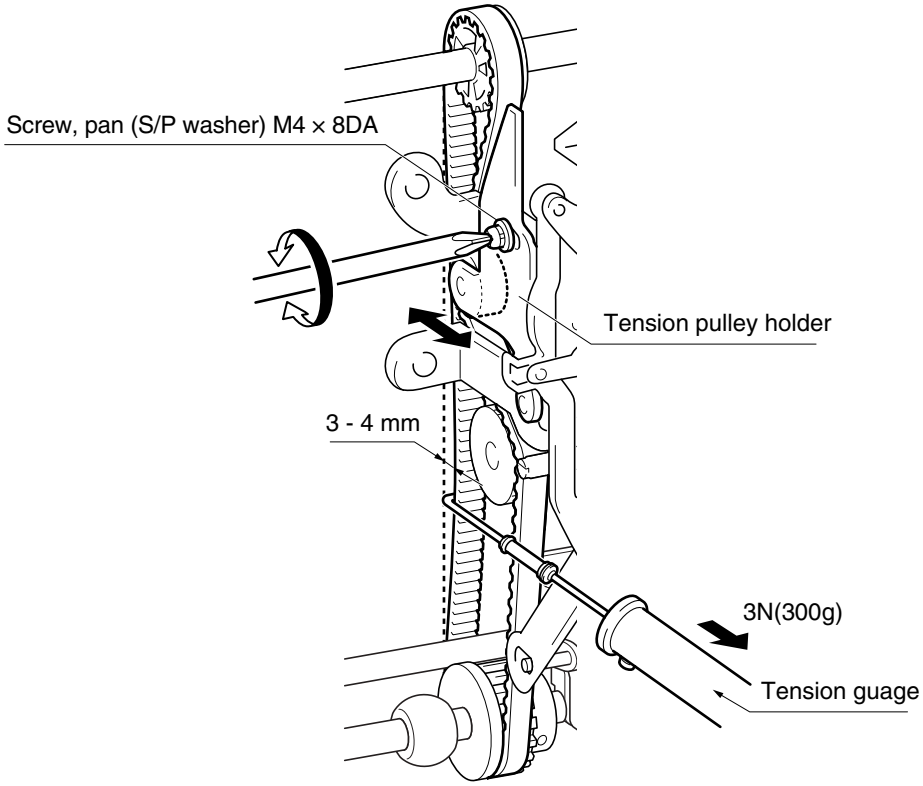

## 2. Adjustment of the Motor Belt Tension

- When pulling on the middle portion of the motor belt with a force of 2 N (200 g), there should be a slack of 4 to 6 mm.

① Loosen the two screws (Bolt, (S/P washer) M 5 × 12) fastening the motor holder.

② Adjust the belt tension by moving the motor holder up or down.

③ Tighten the two screws (Bolt, (S/P washer) M 5 × 12) to secure the motor holder.

④ Check the motor belt tension again.

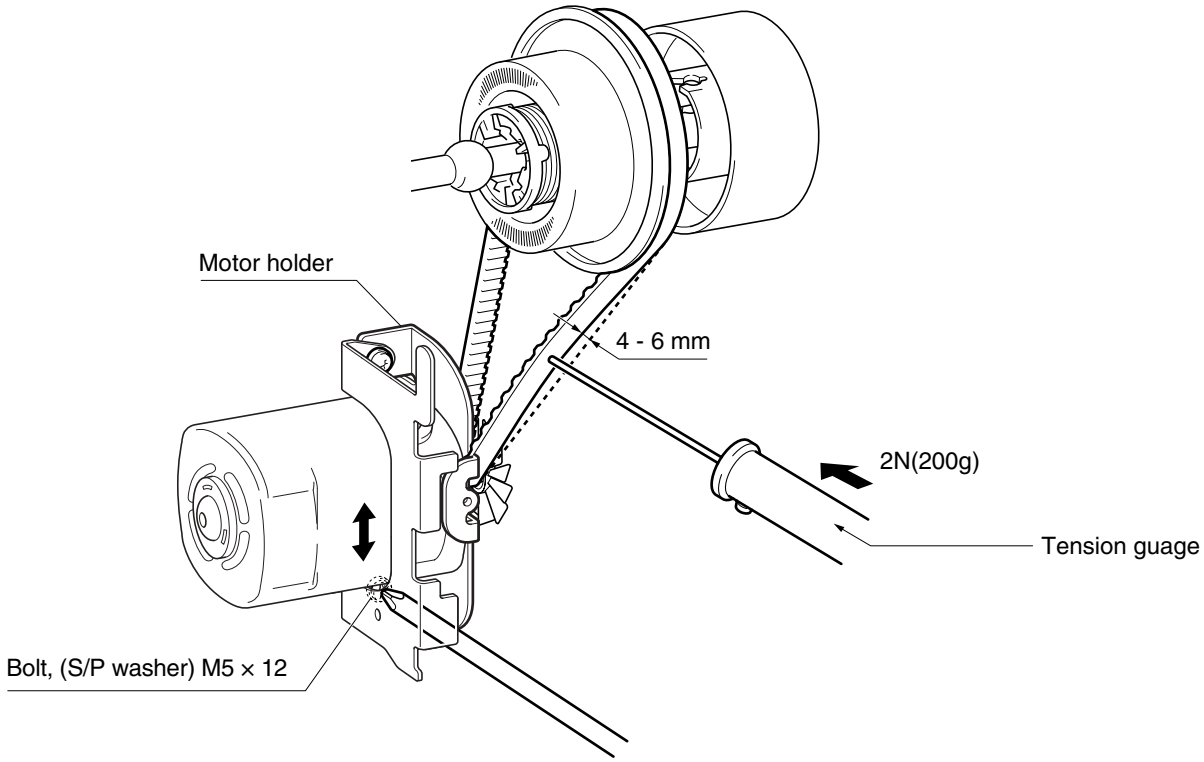

## 3. Adjustment of the Needle Bar Stopper

- When the needle bar is lowered and the needle bar supporter is pushed to the right, the needle point should not touch the needle plate. The needle bar support should not contact the stopper when the needle is in the right down position at the maximum zigzag width setting.

① Turn the pulley to lower the needle bar until its point is even with the upper surface of the needle plate.

② Loosen the screw (Bolt, socket, size M 3 × 6) securing the stopper.

③ Adjust the stopper left or right so that the needle point does not contact the needle plate when the needle bar support is pushed to the right.

④ Tighten the screw (Bolt, socket, size M 3 × 6) to secure the stopper.

⑤ Turn the selection dial and select the maximum zigzag width.

⑥ Turn the pulley to verify that the stopper and the needle bar support do not contact each other when the needle is swung to the right. If they contact each other, repeat the process from ① above.

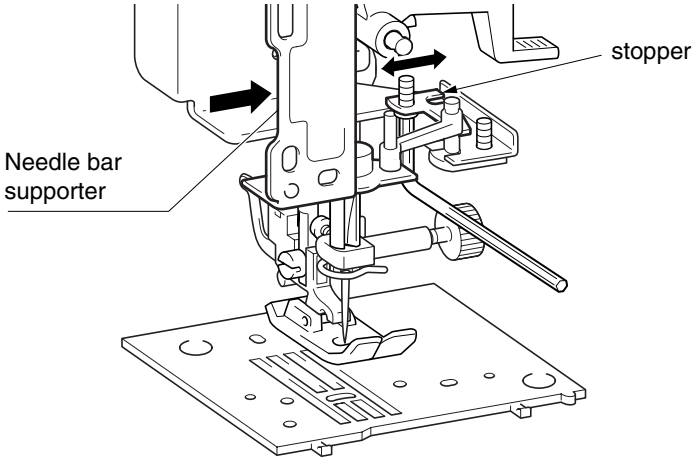


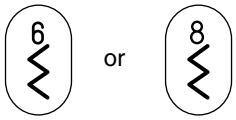


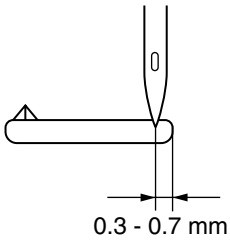


Adjustment of the stopper position

## 4. Adjustment of the Needle Sidewise Movement (Needle Swing Timing)

- The needle swing should be 0.05 mm or less while the needle moves down from the needle plate to its lowest position. While the needle moves up from its lowest position to the needle plate, the needle swing should be 0.15 mm or less. These clearances should be on both sides of the needle plate hole.

① Turn the selection dial to select the maximum zigzag width.

② Match the position of the gear hole to that of the oval part of the frame.

③ Loosen the two screws (Set screw, socket (FT) size M 4 × 4) securing the worm pulley.

④ Turn the pulley to bring the needle bar to its highest position.

⑤ Tighten the two screws (Set screw, socket (FT) size M 4 × 4) to secure the worm pulley.

⑥ Turn the pulley to verify that needle swing timing is within criteria.

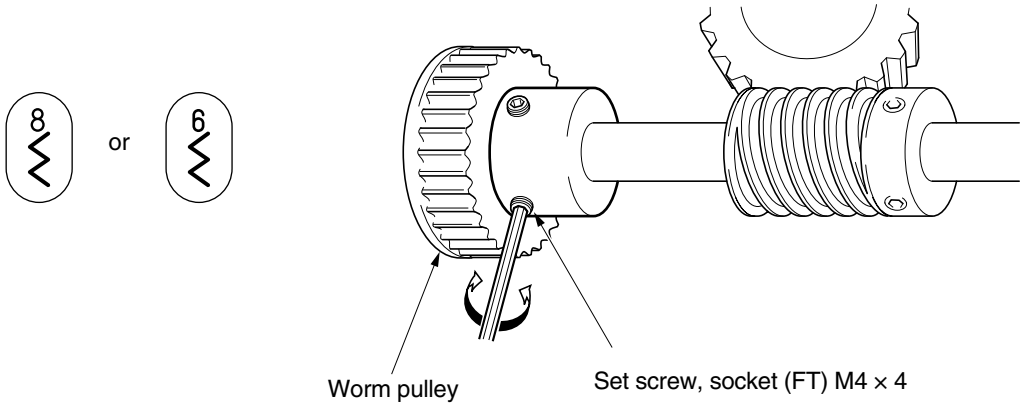


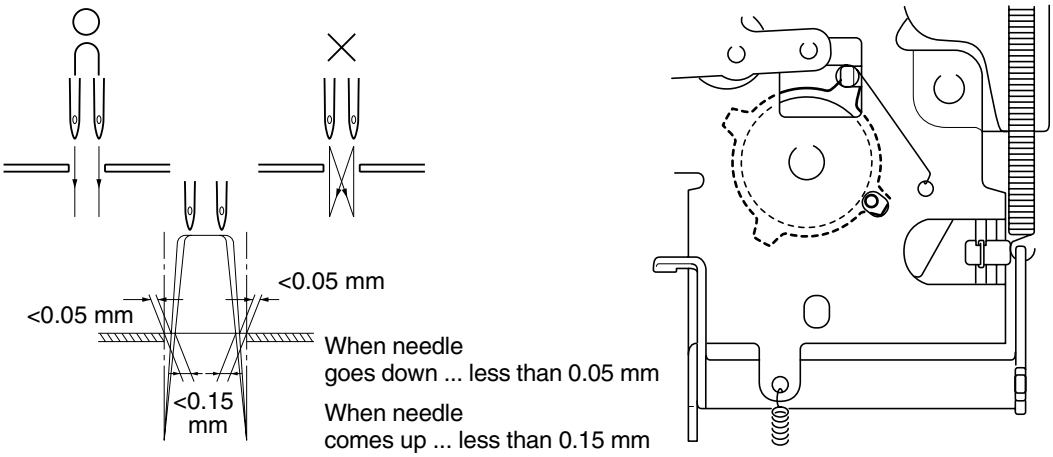

## 5. Adjustment of the Left/Right Position of Zigzag Needle Down

- The swing width at the maximum zigzag should be equal on both right and left sides of the needle hole in the needle plate.

① Attach a J presser foot, lower the presser lever, and attach a cover.

② Turn the selection dial to select the maximum zigzag width.

③ Turn the pulley and check the zigzag width.

④ Loosen the screw (Screw, pan (S/P washer) M 3 × 8 DB) beside the Z linkage and adjust the zigzag width so that it is equally divided on the right and the left sides of the needle hole in the needle plate. (If the screw beside the Z linkage does not provide sufficient adjustment, loosen the upper right-hand screw (Screw, pan M 4 × 8 DB) within the dial and use a adjusting nut to adjust.)

⑤ Tighten the screw (Screw, pan (S/P washer) M 3 × 8 DB) beside the Z linkage.

⑥ Turn the pulley to verify that the zigzag width is evenly divided on the right and the left sides of the needle hole in the needle plate.

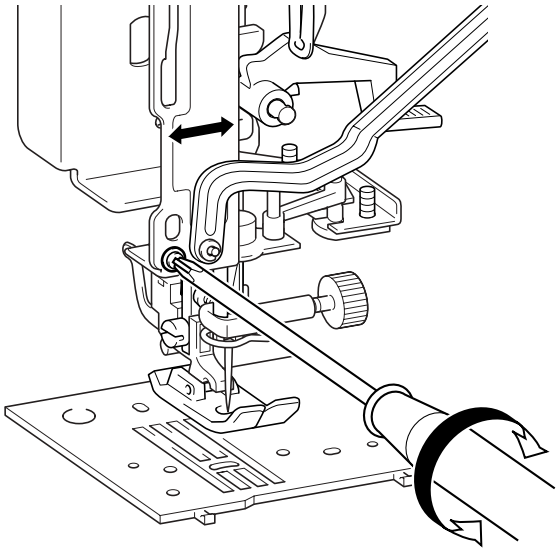

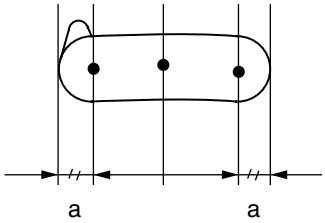


a = b

## 6. Left and Right Balance of the Needle Clearance

- Needle clearance in the down position along the left and right reference lines shall be equally balanced in the forward and backward directions with reference to the needle hole of the needle plate A.

① Attach a J presser foot, lower the presser lever, and attach a cover.

② Turn the pulley by hand to insert the tip of the needle into the needle hole.

③ Loosen the Bolt, socket M 3 × 6.

④ Adjust the needle bar supporter stud holder left or right so that the needle clearance in the down position along the left and right reference lines shall be equally balanced in the forward and backward directions with reference to the needle hole of the needle plate A.

⑤ Tighten the Bolt, socket M 3 × 6, complete with a washer.

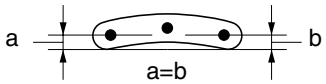


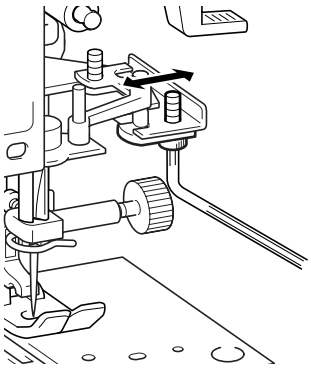

## 7. Adjustment of the BH Left Over Edging (Zero Feed Adjustment)

- BH left over edging shall provide 35 to 45 stitches for every 20 mm feed.

① Attach a J presser foot, lower the presser lever, and attach a cover.
② Turn the selection dial to select the BH left over edging (BH b).
③ Insert a piece of paper under the BH presser foot.
④ Turn the pulley to pierce the paper with the needle and take a measurement for verification.
⑤ Loosen the screw (Screw, pan (S/P washer) M 3 × 8) within the selection dial to adjust. (Left center screw)
⑥ Tighten the screw (Screw, pan (S/P washer) M 3 × 8) within the selection dial.
⑦ Turn the pulley to verify that the stitches are within criteria.

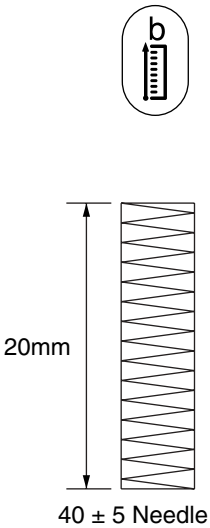


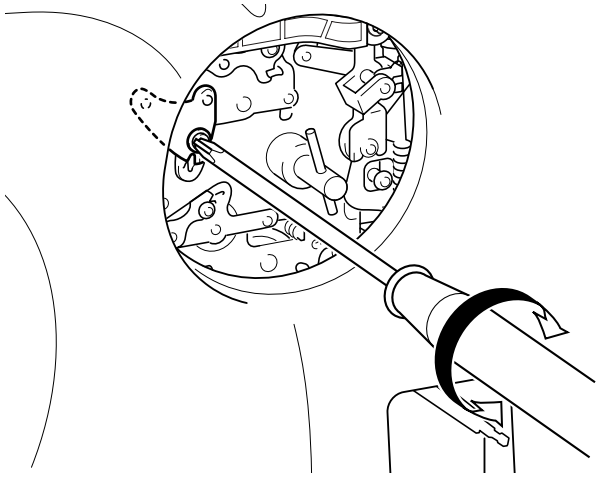

## 8. Adjustment of the zigzag width for BH Right Over Edging

- The zigzag width for BH right over edging should be so that the difference with the zigzag width of BH left over edging (BH b) is 0.2 mm or less.

① Attach a J presser foot, lower the presser lever, and attach a cover.

② Turn the selection dial to select the BH left over edging (BH b).

③ Attach a BH presser foot.

④ Hold a piece of paper by hand and turn the pulley to pierce the paper with the tip of the needle.

⑤ While holding the piece of paper by hand, turn the selection dial to select the BH right over edging (BH d).

⑥ Hold the piece of paper by hand and turn the pulley to pierce the paper with the tip of the needle.

⑦ Check the zigzag width of right over edging against that of left over edging.

⑧ Loosen the screw (Screw, pan M 3 × 8) of the adjusting nut. (Lower right screw)

⑨ Turn the adjusting nut with a spanner to adjust the zigzag width of right over edging to make it equal to that of left over edging.

⑩ Tighten the screw (Screw, pan M 3 × 8) of the adjusting nut.

⑪ Repeat steps ① through ⑤ above to check the zigzag width again.

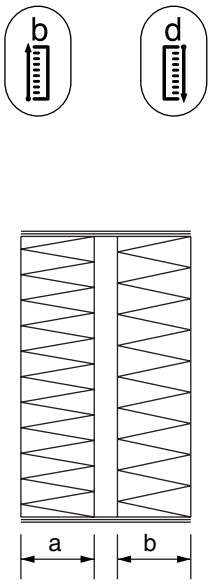


$|a - b| \leq 0.2$mm

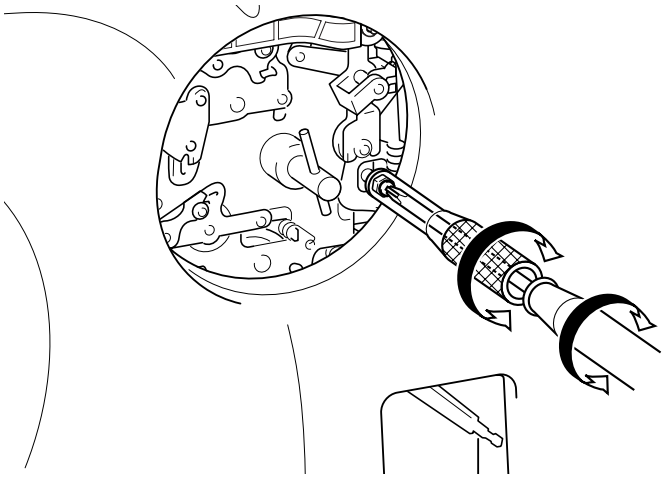

## 9. Adjustment of the Feeding for BH Right Over Edging (Adjustment of Satin Feeding)

- The number of stitches of right over edging for every 20 mm should be 35 to 45.

① Attach a J presser foot, lower the presser lever, and attach a cover.
② Turn the selection dial to select the BH right over edging (BH d).
③ Set the slit for fine adjusting knob to vertical position.
④ Insert a piece of paper under the BH presser foot.
⑤ Turn the pulley to pierce the paper with the needle and take a measurement for verification.
⑥ Loosen the screw (Screw, pan (S/P washer) M 3 × 8) within the selection dial. (Upper center screw)
⑦ Tighten the screw (Screw, pan (S/P washer) M 3 × 8) within the selection dial. (Upper center screw)
⑧ Turn the pulley to verify that the stitches are within criteria.

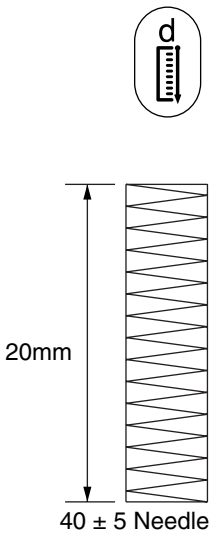


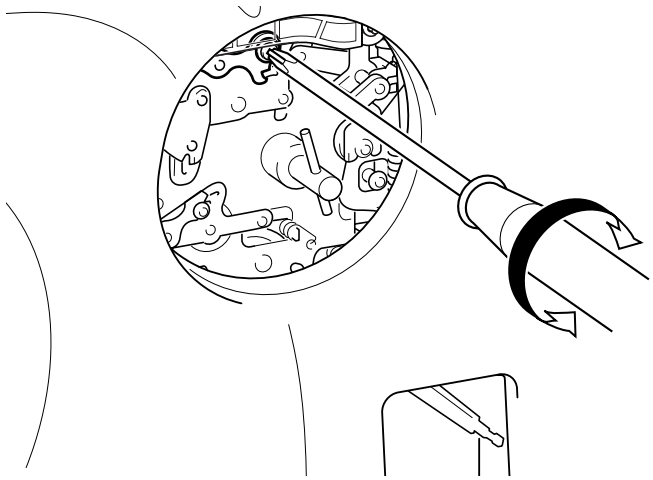

## 10. Forward/Reverse Adjustment of the Super Stitch Feeding

- The stitch length of both the forward and the reverse feeds should be the same.

① Attach a J presser foot, lower the presser lever, and attach a cover.
② Turn the selection dial to select the triple zigzag stitching.
③ Set a piece of paper and turn the pulley to check the needle down condition.
④ Loosen the screw (Screw, pan M3 × 8) within the selection dial. (Lower left screw)
⑤ Turn the screw with a screw driver to adjust feed amount of both the forward and reverse feeds.
⑥ Loosen the screw (Screw, pan M3 × 8) within the selection dial. (Lower left screw)
⑦ Set a piece of paper and turn the pulley to check the needle down condition.

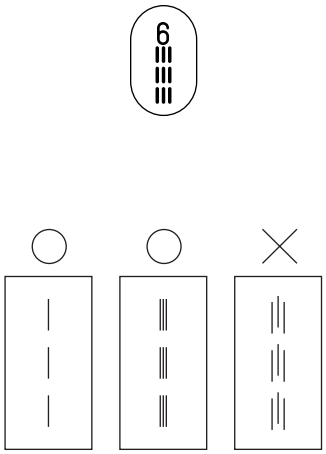


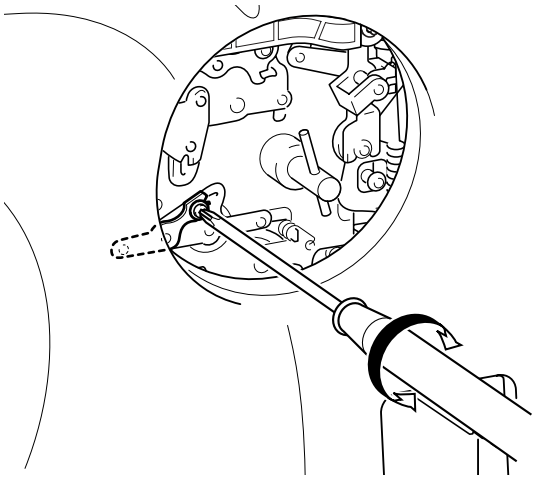

## 11. Adjustment of Forward/Back Position of Needle Against the Needle Hole in the Presser Foot

① Attach a J presser foot, lower the presser lever, and attach a cover.

② Turn the pulley by hand to insert the tip of the needle into the needle hole.

③ Adjust the amount of tightening of the adjusting screw to bring the tip of the needle into the center of the needle hole along the forward/back direction.

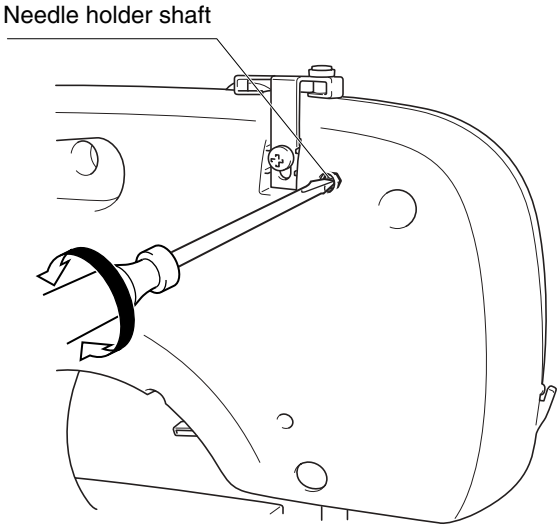


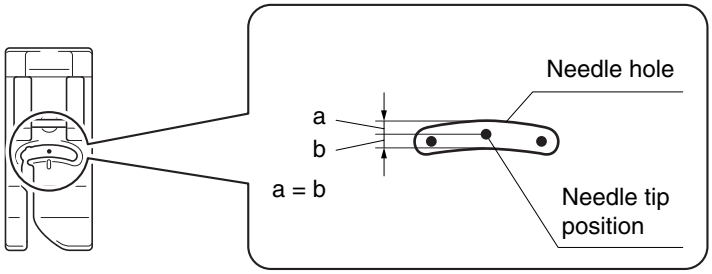

## 12. Adjustment of the Amount of Needle Bar Rise

- When a needle (#14) is raised by 2.9 to 3.3 mm above the lowest point of its zigzag (max.) left needle down position, the rotary hook point should be even with the perimeter of the needle.

① Attach a J presser foot, lower the presser lever, and attach a cover.

② Select the maximum zigzag width.

③ Turn the pulley by hand to bring the needle to the lowest point of its left needle down position.

④ Loosen the two screws (Set screw, socket, FT, M5 × 5) on the lower shaft pulley.

⑤ Adjust assembly of the lower shaft and the lower shaft pulley so that the right edge of the needle and the rotary hook point are even when the needle bar is raised by 2.9 to 3.3 mm above the reference line of the needle bar's lowest point.

⑥ Tighten the socket type set screws (Set screw, socket, FT) on the lower shaft pulley to secure it.

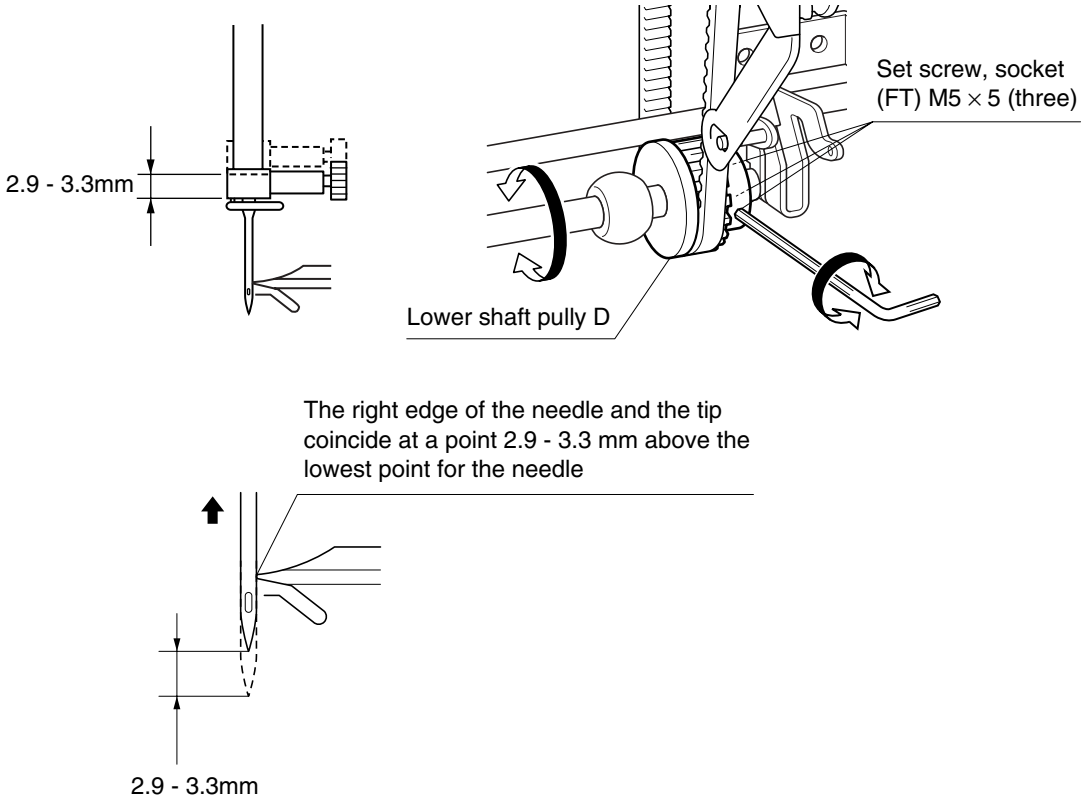

## 13. Adjustment of the Needle Bar Height

- When the rotary hook point is even with the perimeter of the needle (#14) after turning the pulley by hand from the zigzag maximum left needle down position, the distance from the highest point of the needle hole to the lower edge of the rotary hook point should be 1.0 to 1.4 mm.

① Attach a J presser foot, lower the presser lever, and attach a cover.

② Select the maximum zigzag width.

③ Turn the pulley until the perimeter of the needle is even with the rotary hook point near the left needle drop position.

④ Loosen the screw (Set screw, socket, FT, M 4 × 4) on the needle bar clamp.

⑤ Adjust the needle bar height until the distance between the highest point of the needle hole and the lower edge of the rotary hook point is 1.0 to 1.4 mm.

⑥ Tighten the screw (set screw, socket, FT, M 4 × 4) on the needle bar clamp.

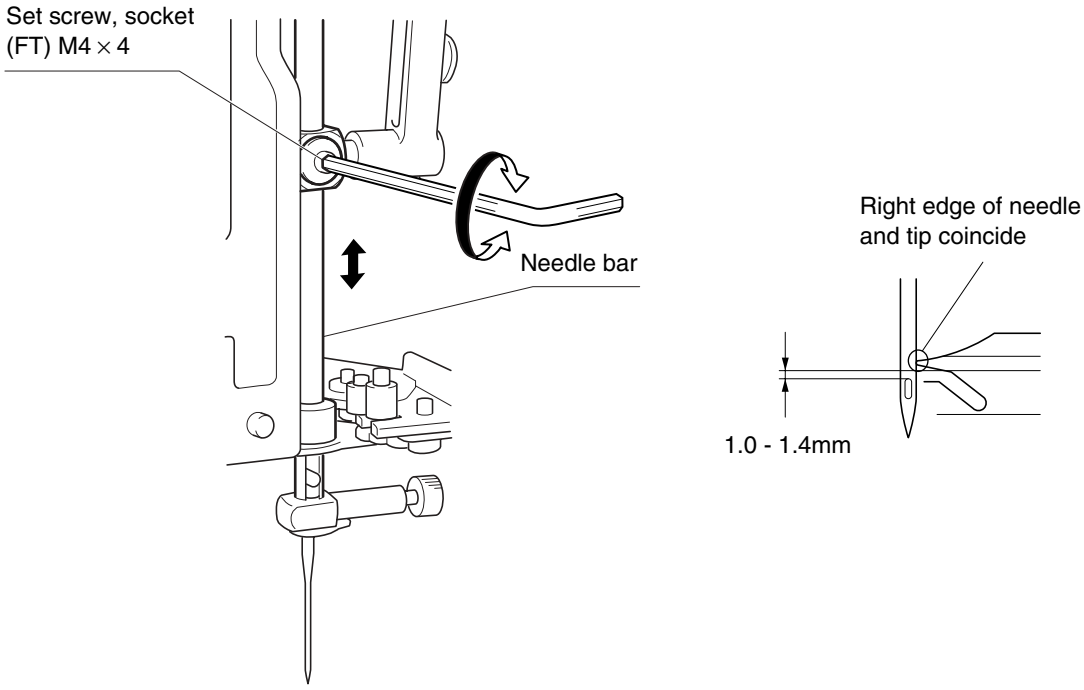

## 14. Adjustment of the Needle Clearance

- When the rotary hook point is even with the perimeter of the needle (#14) after turning the pulley by hand from the zigzag maximum right needle down position, the clearance between the needle and the rotary hook point should be 0.1 mm or less.

① Attach a J presser foot, lower the presser lever, and attach a cover.

② Select the maximum zigzag width.

③ Turn the pulley until the right-most edge of the needle is even with the rotary hook point.

④ Adjust the amount of tightening of the adjusting screw so that the clearance between the needle and the rotary hook point is 0.1 mm or less.

⑤ Tighten the screw, pan M 3 × 25.

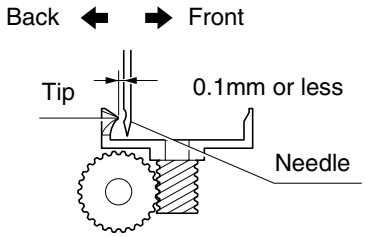


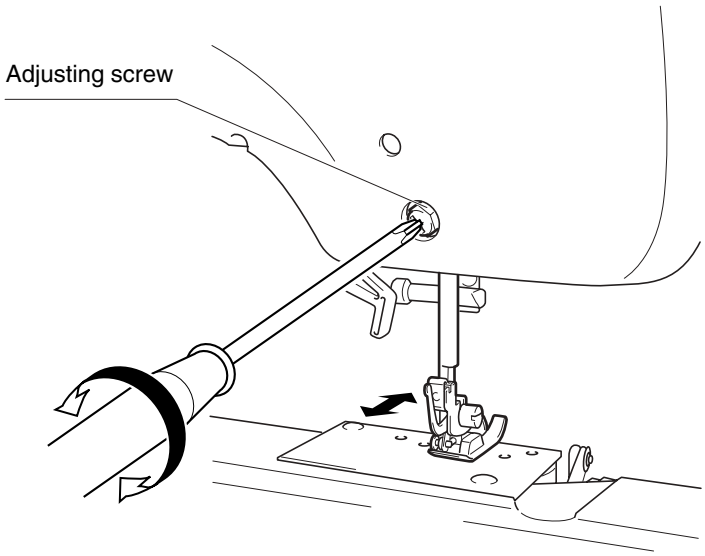

## 15. Adjustment of the Presser Bar Height

- The gap between the top surface of the needle plate A and the bottom surface of the presser foot should be 6.0 to 6.5 mm.

① Attach a J presser foot, lower the presser lever, and attach a cover.

② Raise the presser lifter.

③ Turn the pulley until the feed dog is lowered below the needle plate A.

④ Loosen the screw (Set screw, socket, CP, M 5 × 8) on the presser bar clamp assembly.

⑤ Adjust the presser bar height so that the gap between the upper surface of the needle plate A and the bottom surface of the presser foot is 6.0 to 6.5 mm.

⑥ Tighten the screw (Set screw, socket, CP, M 5 × 8) on the presser bar clamp assembly.

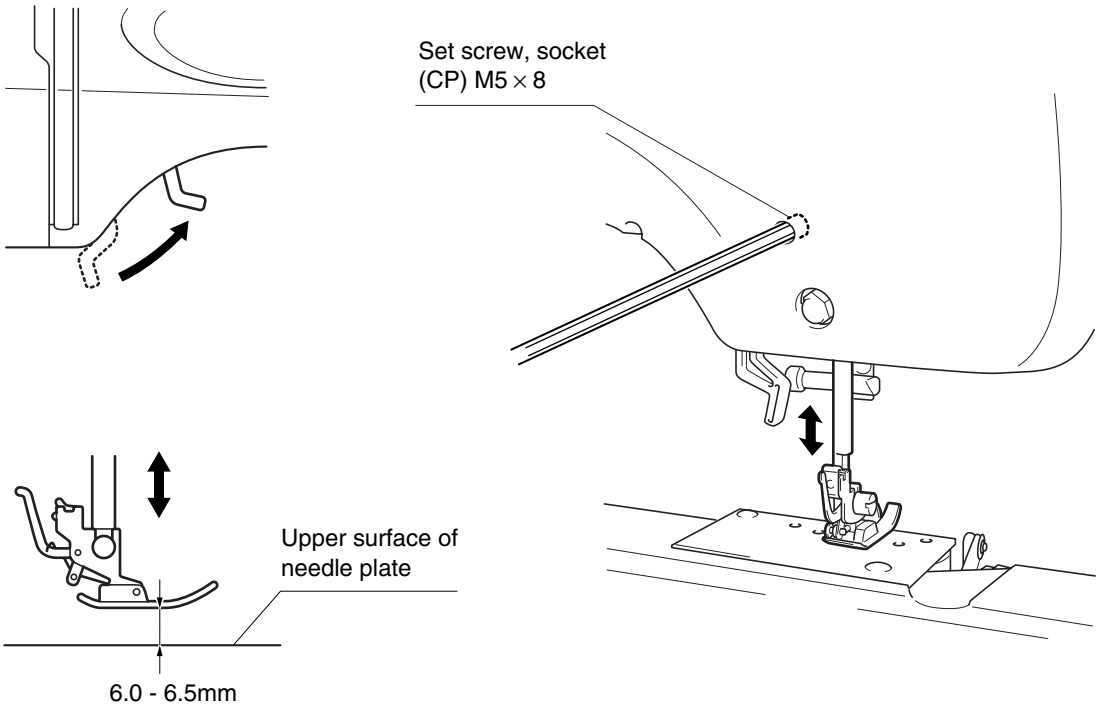

## 16. Adjustment of the Feed Dog Height

- Adjust the tightening amount of the bolt, socket M 4 × 4 so that the feed dog height is 0.9 to 1.1 mm from the top surface of the needle plate A.

① Attach a J presser foot, lower the presser lever, and attach a cover.

② Turn the pulley to move the feed dog to its highest position.

③ Adjust the amount of tightening of the bolt, socket, M 4 × 4, until the feed dog is exposed 0.9 to 1.1 mm above the top surface of the needle plate A.

④ Check that the feed dog is at least 0.5 mm below the top surface of the needle plate A when the feed dog is moved to its lowest position.

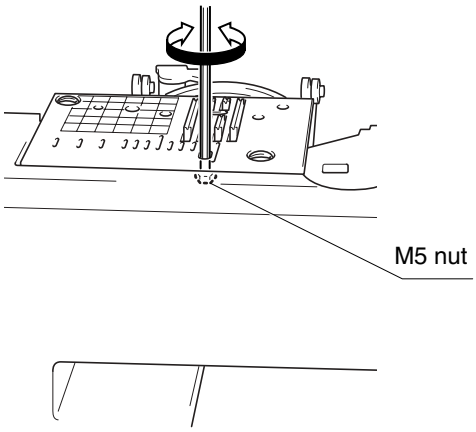


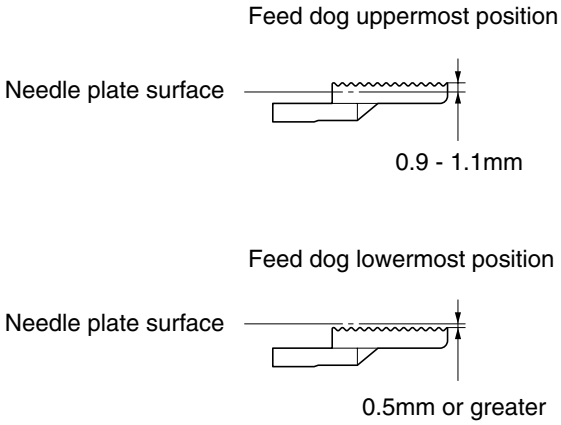

## 17. Forward/Back and Left/Right Position Adjustment of the Feed Dog

- Forward/back direction:The gap between the feed dog and the needle plate on the near side should be 0.3 to 0.8 mm when the feed amount is maximum.
- Left/right direction:The feed dog should not touch the needle plate (gap being 0.1 mm min.) when the feed amount is maximum.

① Attach a J presser foot, lower the presser lever, and attach a cover.

② Remove the screw and then the needle plate A.

③ Loosen the 3 × 6 bind screw and temporarily attach the needle plate A to adjust the forward/back and left/right position of the feed dog.

④ Tighten the 3 × 6 bind screw to secure the feed dog.

⑤ Tighten the M4 screw completely to secure the needle plate A.

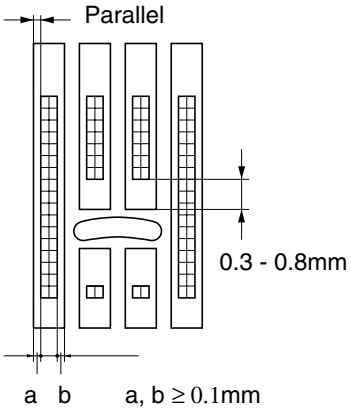


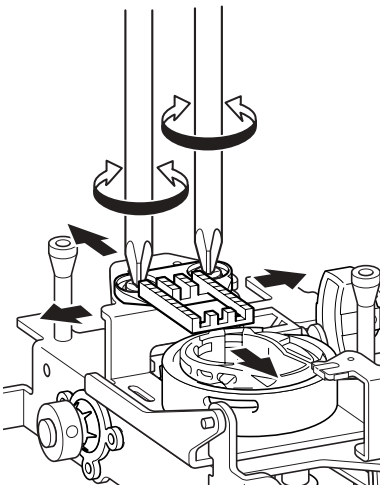

## 18. Adjustment of the Position of the Inner Rotary Hook Rotation Prevention Bracket

① Set the inner rotary hook in the rotary hook.

② Loosen the bind screw securing the inner rotary hook rotation prevention bracket assembly.

③ Adjust the position of the inner rotary hook rotation prevention bracket assembly so that the overlap distance between the inner rotary hook and the rotation prevention bracket assembly is 1.6 to 1.8 mm and secure it with the screw, pan (S/P washer ) M 3 × 6.

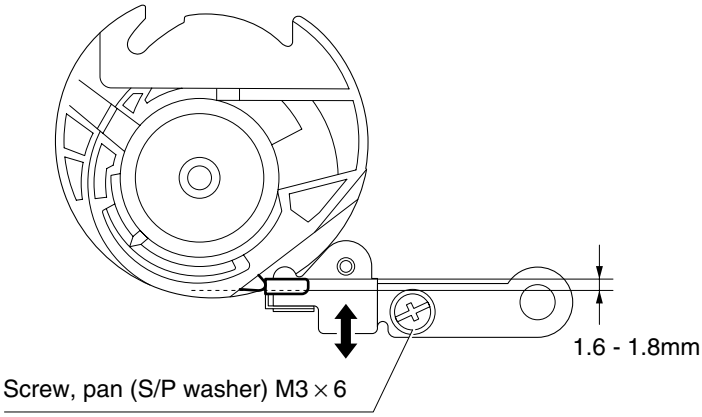

## 19. Adjustment of the Upper Thread Tension

- The thread tension should be 0.38 - 0.43 N (38 - 43g) when pulled slowly using a tension gauge.

① Raise the presser foot.

② Set the thread tension dial to 4.

③ Thread a schappe spun sewing thread # 60 through the thread guide and the thread tension disc.

④ Lower the presser lifter.

⑤ Adjust the tightening amount of the thread tension adjusting screw so that the thread tension is 0.38 - 0.43 N (38 - 43g) when pulled slowly using a tension gauge.

⑥ Apply a small amount of screw locking agent to the thread tension adjusting screw.

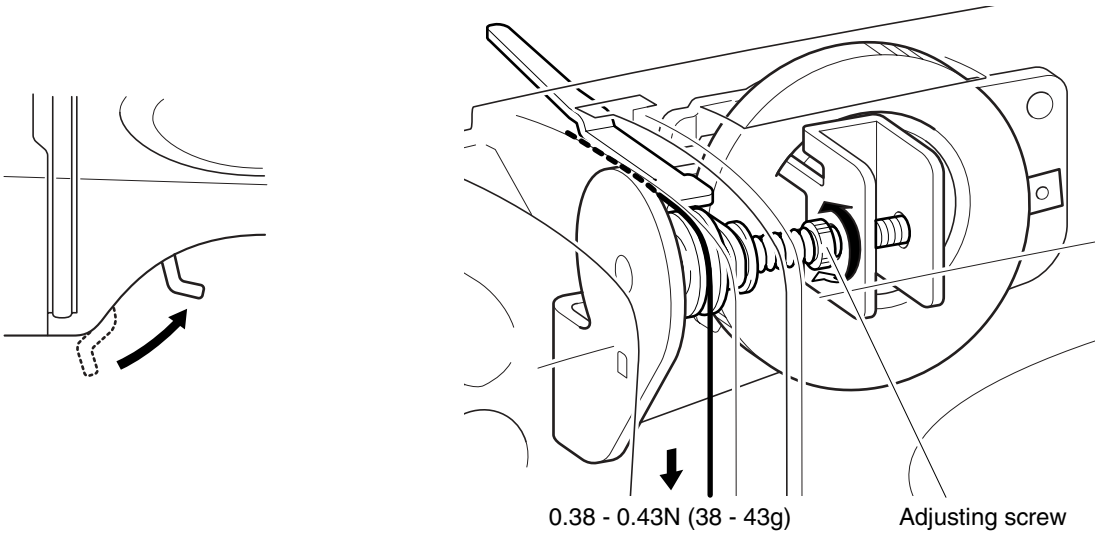

## 20. Adjustment of the Inner Rotary Hook (Lower Thread) Tension

① Set a bobbin (wound with a schappe spun sewing thread # 60) in the inner rotary hook and put a thread through.

② Adjust the tightening amount of the spring tension adjusting screw so that the thread tension is 0.10 to 0.12 N (10 to 12 g) when pulled slowly using a tension gauge.

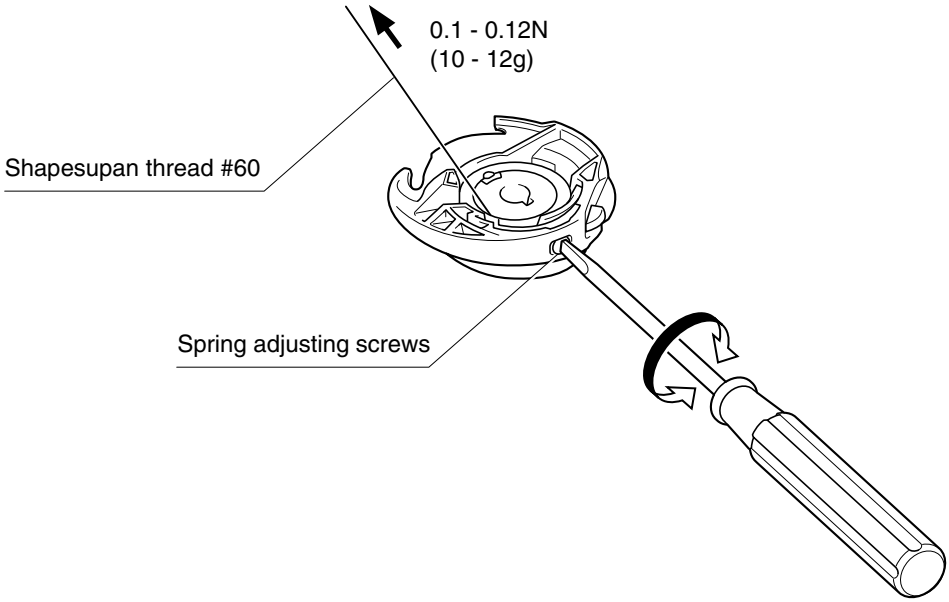

## 21. Adjustment of the Thread Winding (Uneven Bobbin Winding and Amount of Thread Winding)

① Move the thread winding guide assembly up or down to adjust and correct for uneven bobbin winding. (Uneven bobbin winding)

② Rotate the bobbin presser to adjust the amount of thread winding. (As a guideline of thread winding amount, a bobbin should be wound up to 80 to 90% of the external diameter of the bobbin.)

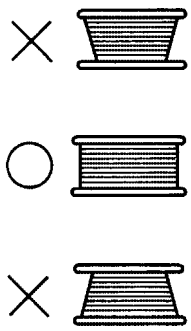

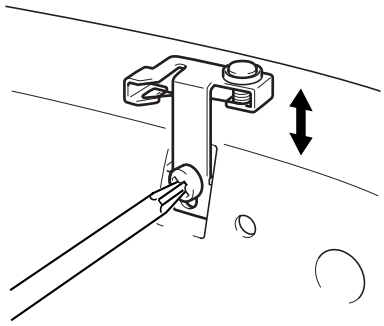

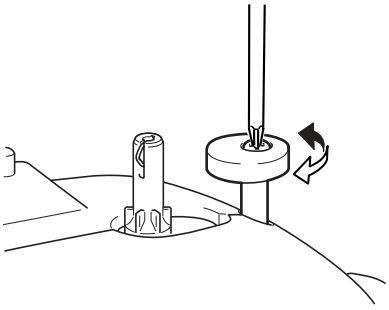

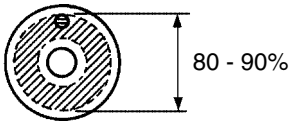

XL2120/21/30/40
XL2220/30/40/50
29F03HF885S22/23