SERVICE MANUAL FOR

XL-6562
XL-6452
XR-46

4. 2001.

GENERAL INFORMATION

This service manual has been compiled for explaining repair procedures of the MODEL XL-6562, XL6452, XR-46.
This was produced based on up-to-date product specifications at the time of issue, but there may have been changes of specifications for the purpose of improvements.
Contact manufacturer or local sales company for information concerning such changes.

Brother Industries, Ltd.
Nagoya, Japan

CONTENTS

I . PRINCIPAL MECHANISMS..... 1
II . DISASSEMBLING AND REASSEMBLING THE SEWING MACHINE 6
III . MECHANICAL ADJUSTMENT STANDARDS AND ADJUSTMENT PROCEDURES 28
IV . TROUBLESHOOTING PROCEDURES..... 58

CAUTION

1. Use the operation procedure given in this document.
2. Always disconnect the power cord from the socket before starting to install or remove any parts.
3. Always replace only with genuine Brother parts.
4. Do not alter this sewing machine.

* Doing so can cause fire, electrical shock, injury, etc.

I. PRINCIPAL MECHANISMS

1. MECHANICAL CHART 2
2. POWER TRANSMISSION CHART 3

1. MECHANICAL CHART

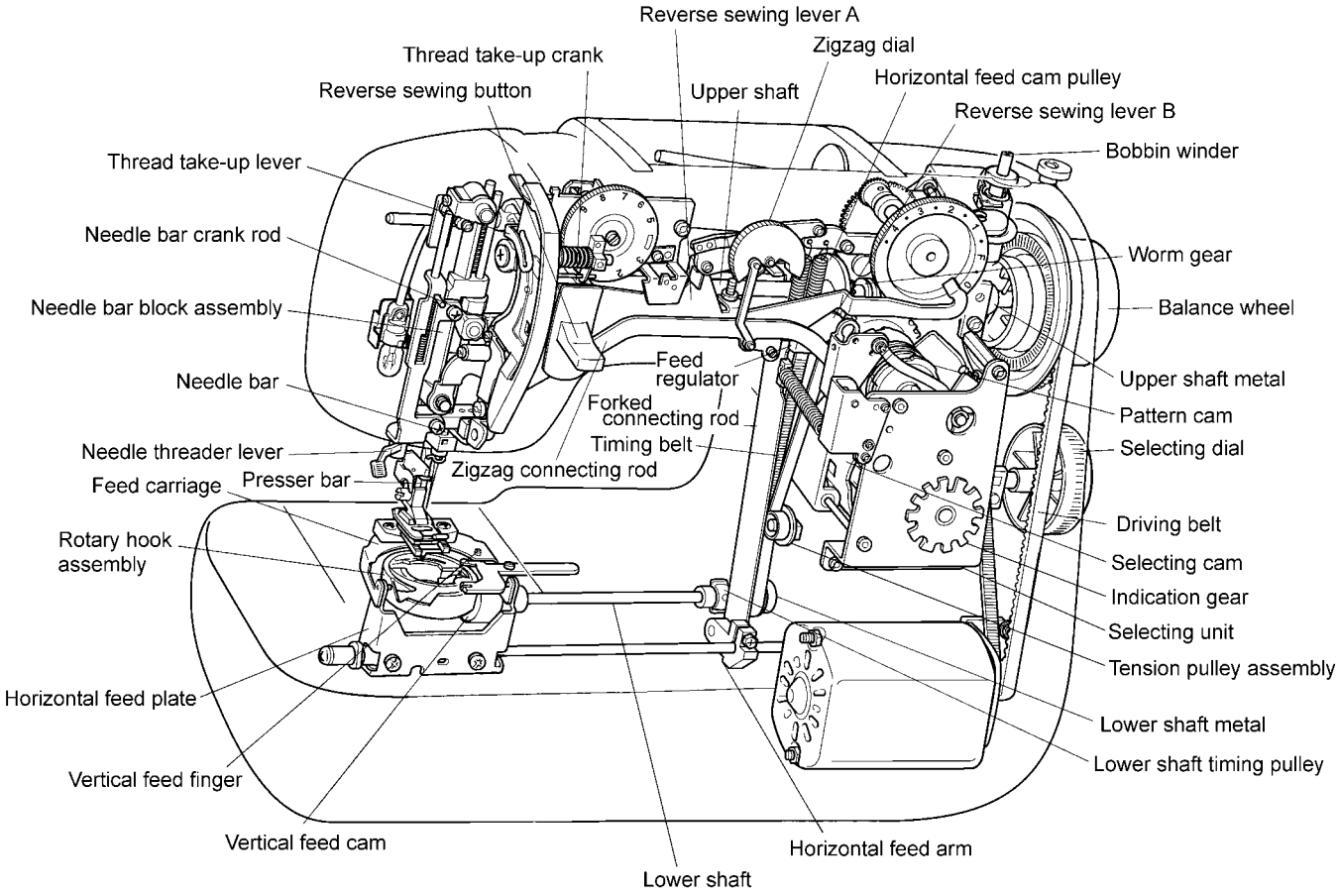

2. POWER TRANSMISSION CHART

(A) Generating mechanism of needle bar, thread take-up lever and zigzag movements

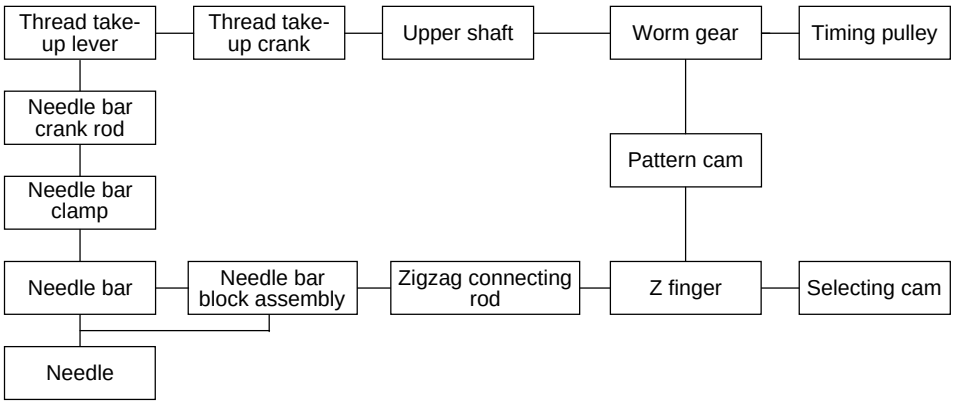

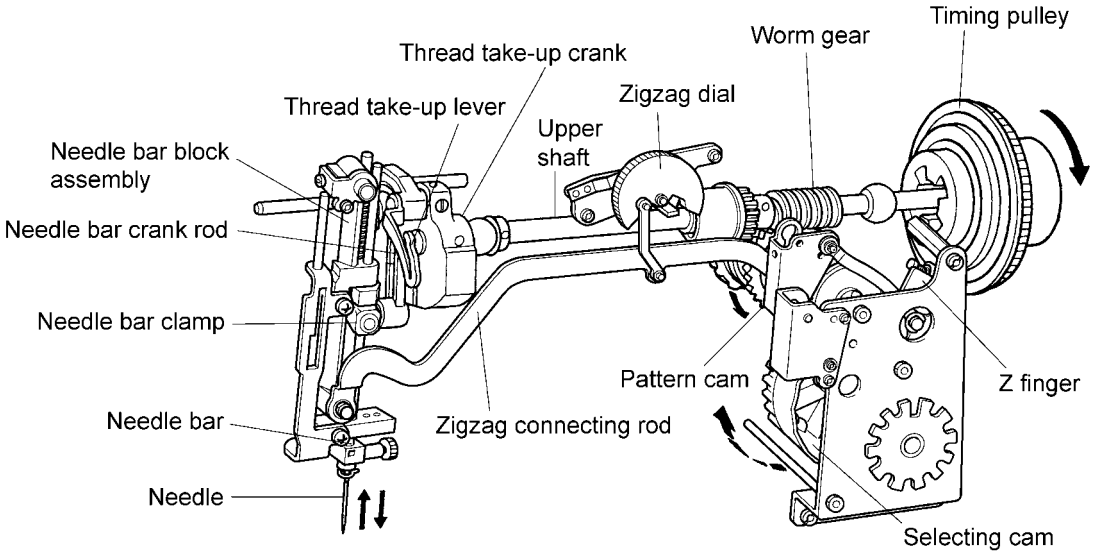

(B) Mechanism of feed dog and rotary hook movement

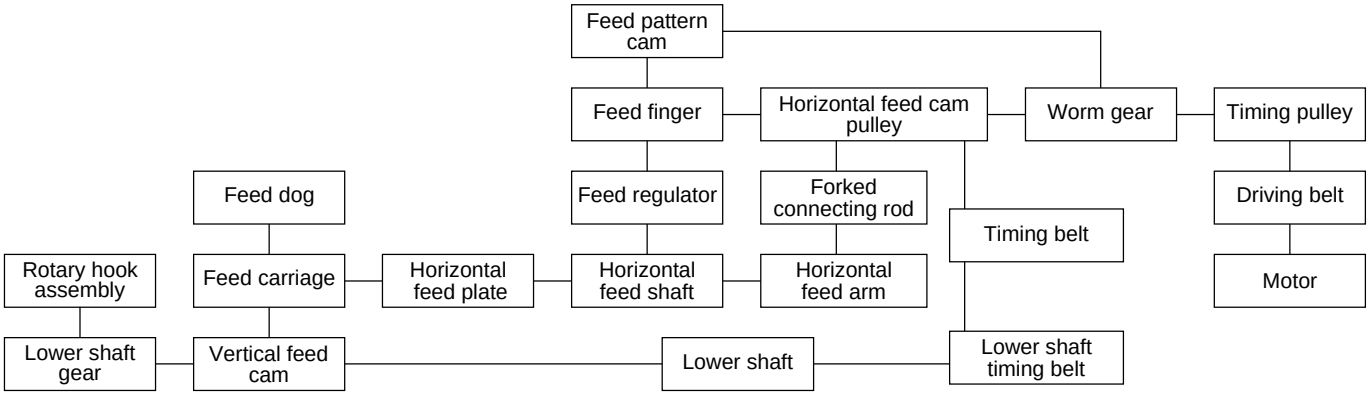

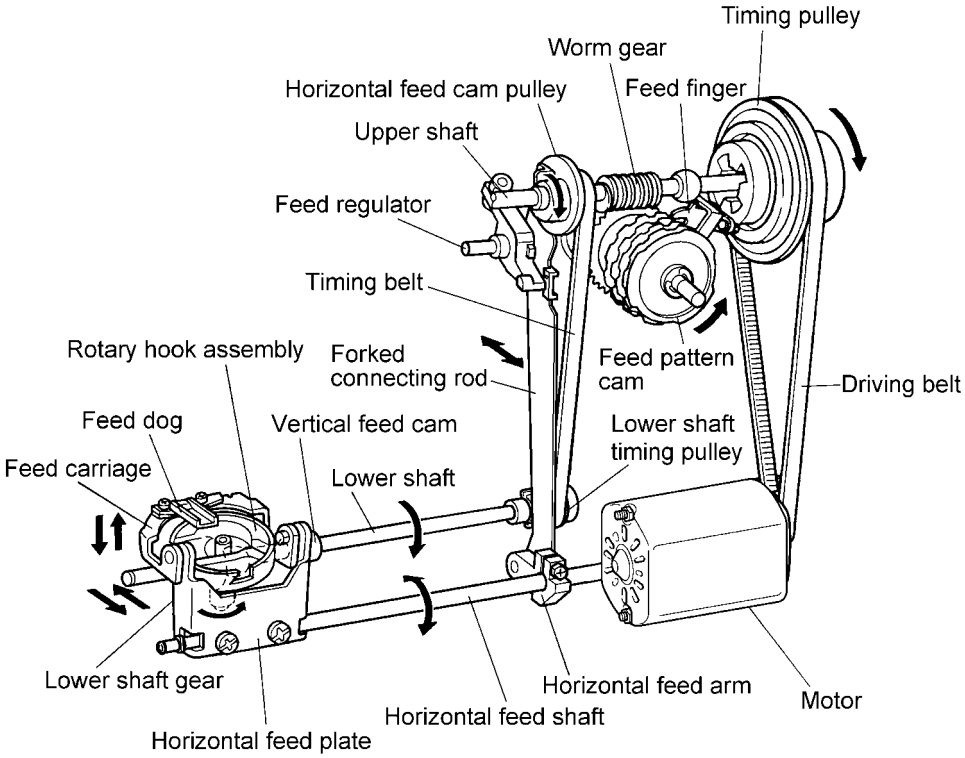

(C) Automatic 1-step BH mechanism

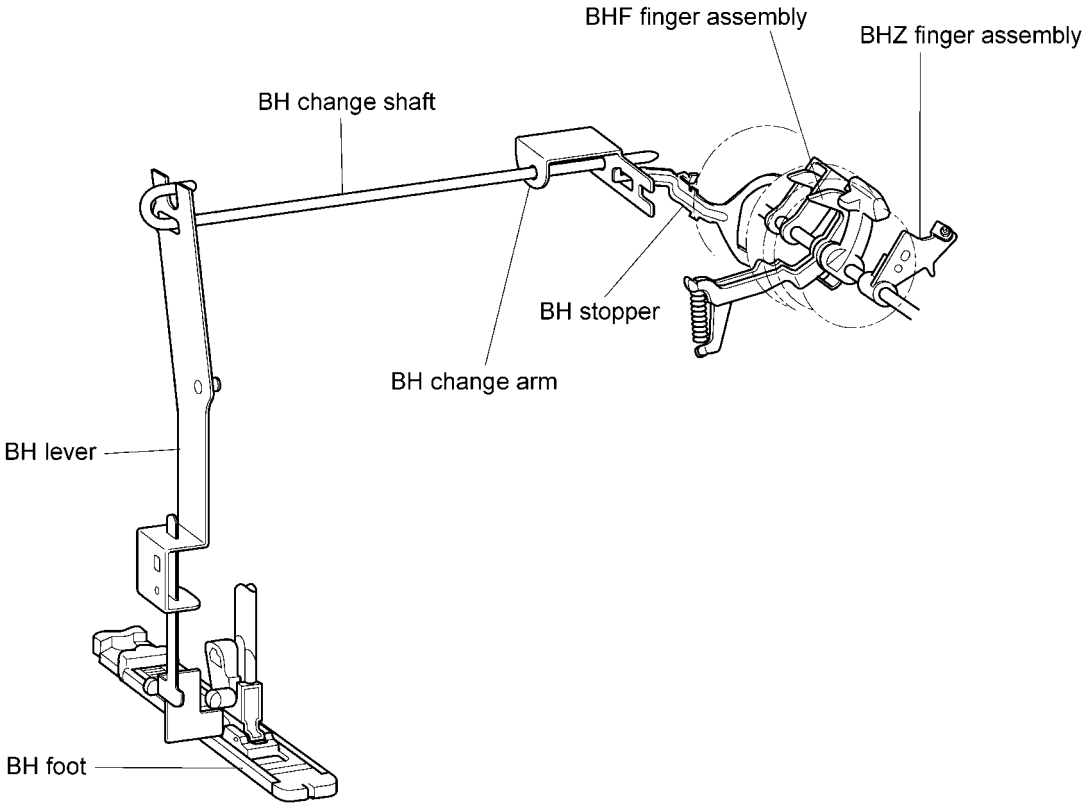

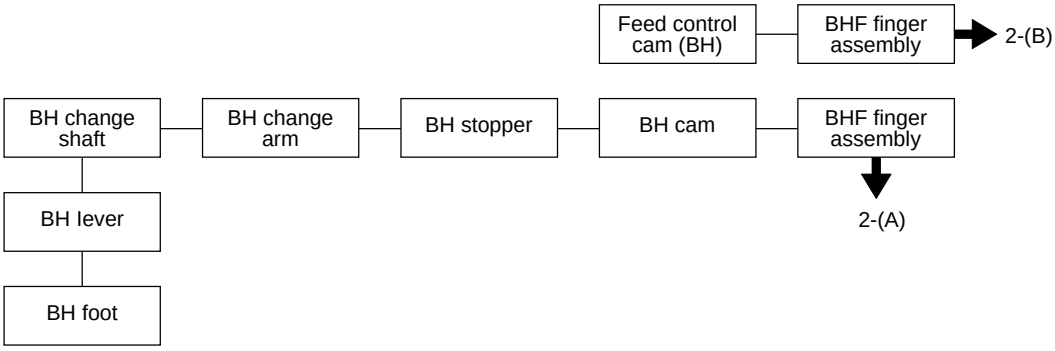

II. DISASSEMBLING AND REASSEMBLING THE SEWING MACHINE

1. DISASSEMBLING AND REASSEMBLING THE OUTER PARTS AND MAIN PARTS..... 7
2. LEAD WIRE ARRANGEMENT..... 27

1. DISASSEMBLING AND REASSEMBLING THE OUTER PARTS AND MAIN PARTS

Disassembly procedure

1. Remove the screws holding the face plate, then remove the face plate to the left.
2. Remove the flat bed attachment by sliding it to the left.
3. Remove the six screws holding the front cover (three on the rear, two on the bottom, one of the left), then lift up the front cover from the bottom side, open it forward, and remove it.
4. Lower the presser lifter, remove the four screws holding the rear cover (two on front, one on rear, and one on bottom), and then remove the rear cover. Remove the handle too.

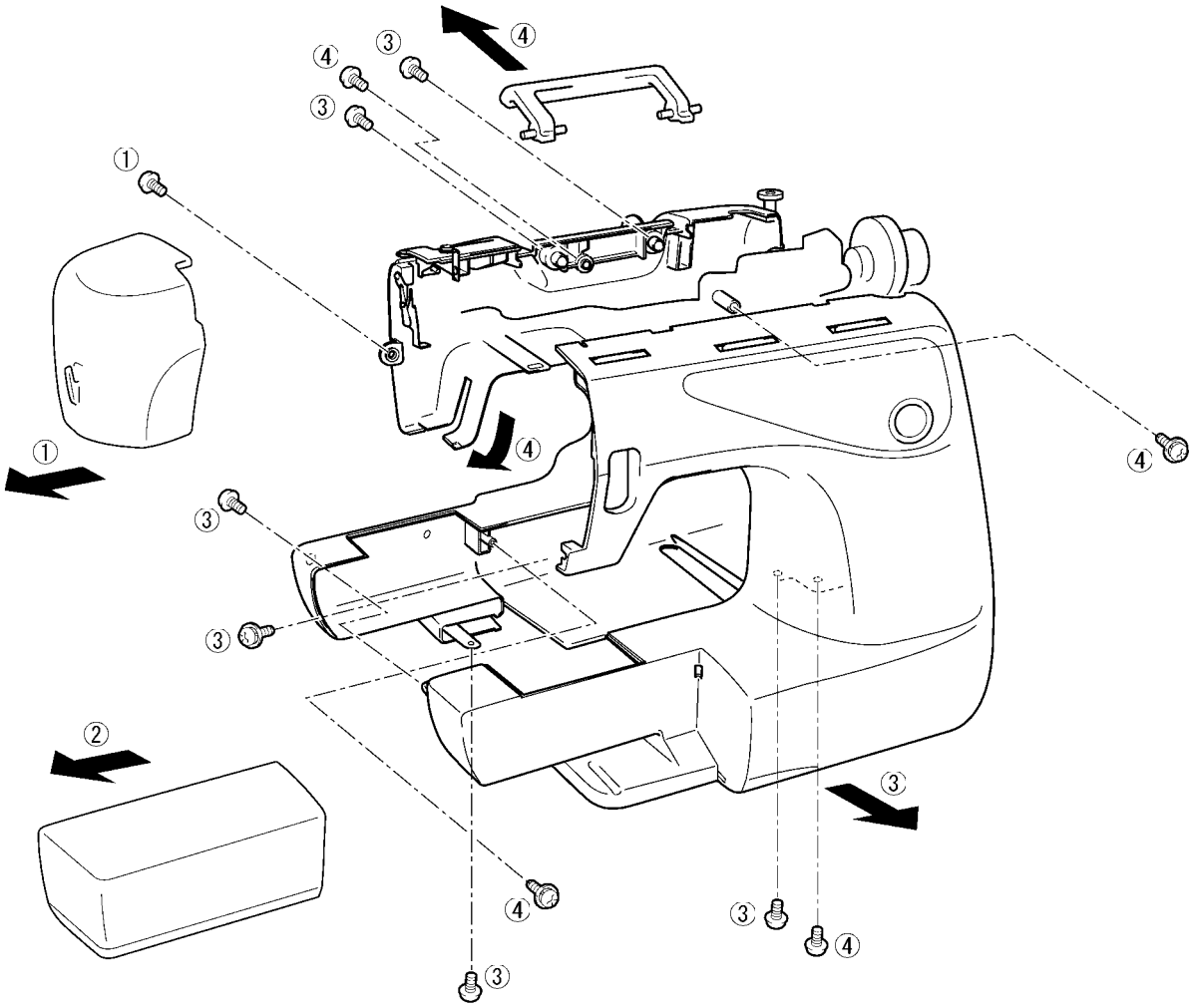

5. Remove the two screws holding the 3-pin socket folder assembly on the rear of the sewing machine, remove the 3-pin socket folder, and then remove the three wiring harness bands for the lamp cord.
6. Remove the screws holding the cord clamp.
7. Remove the two screws holding the motor holder, then remove the motor. The driving belt can be removed too.

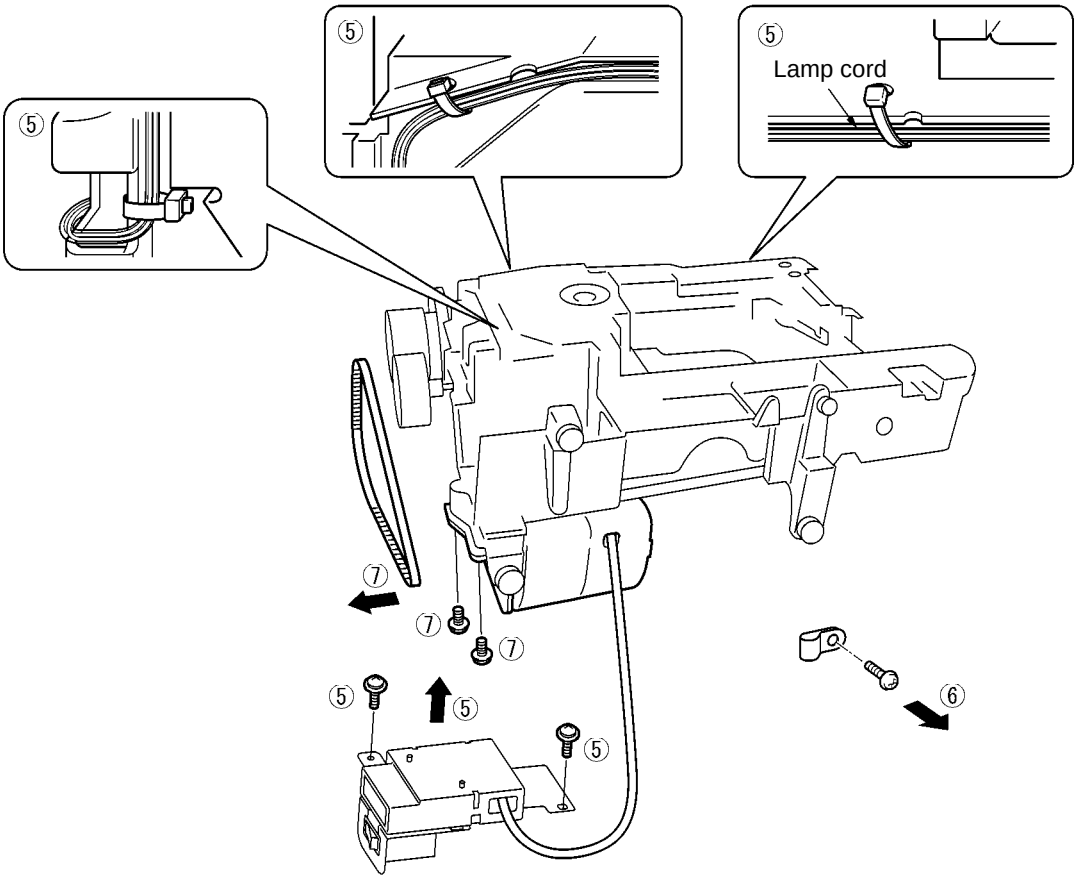

8. Remove the lock ring, remove the two screws holding the Zigzag dial assembly, and then remove the Zigzag dial assembly.
9. Remove the two screws holding the thread tension assembly, then remove the thread tension assembly.
10. Remove the tension spring, two screws, lock ring, and the spring for forked connecting rod, remove the screws holding the Zigzag connecting rod adjustment nut, and remove the Zigzag connecting rod.
11. Remove the lock ring, and the screw, then remove reverse sewing lever A.
12. Remove the tension spring for reverse sewing lever B, then remove reverse sewing lever B.
13. Remove the feed regulator tension spring.
14. Remove the two screws holding the feed bracket assembly, then remove the feed bracket assembly.

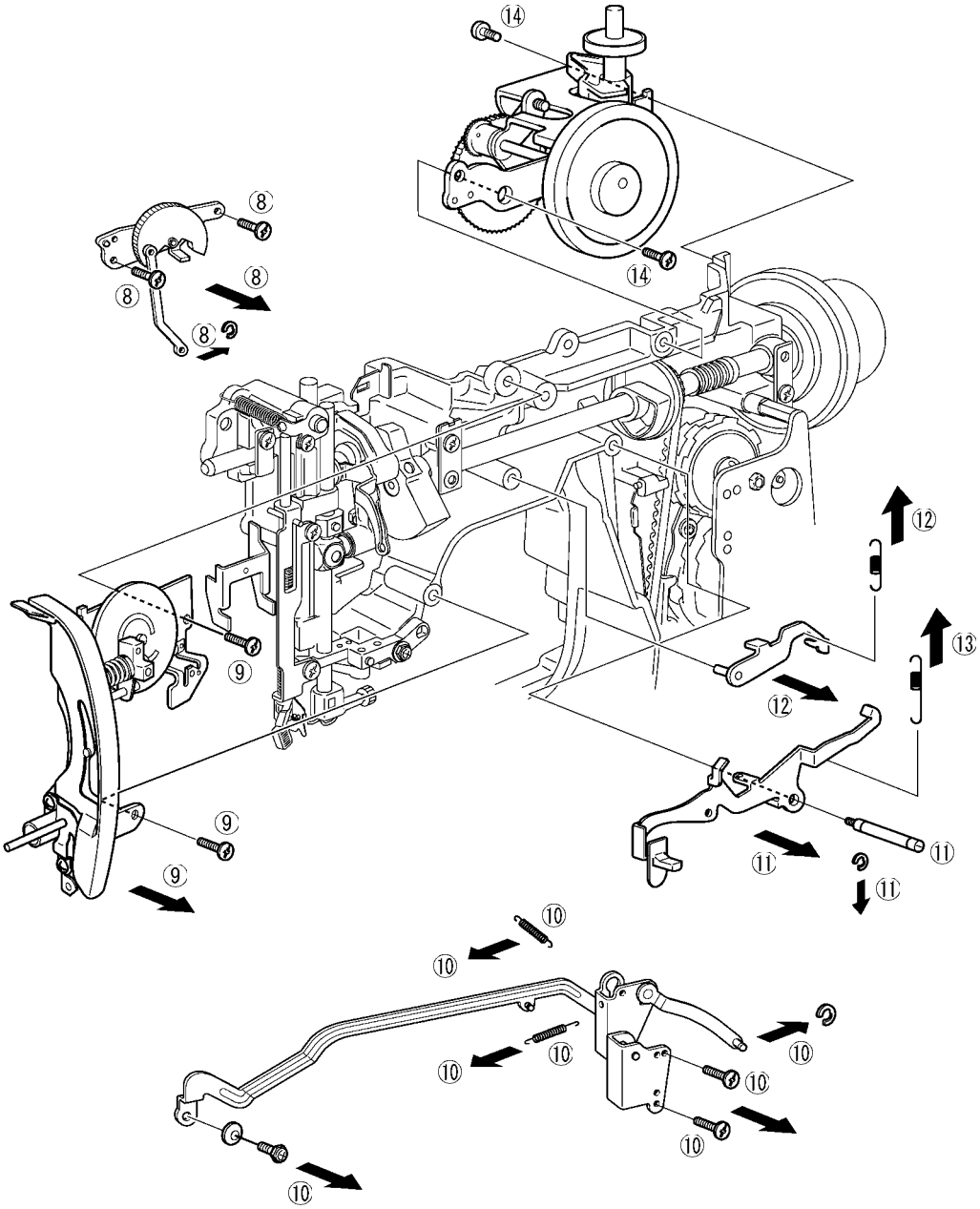

15. Loosen the setscrew for the needle, then remove the needle.
16. Remove the screws holding the presser holder, then remove the presser holder and the presser foot.
17. Remove the tension spring from the needle bar block assembly.
18. Remove the screws holding the needle bar supporter stud holder assembly, then remove the needle bar supporter stud holder assembly.
19. Remove the needle bar block assembly, then remove the setscrew and lock nut.

Disassembly Point

19. Turn the needle bar block assembly slightly to the left side, then pull it forward to remove it.

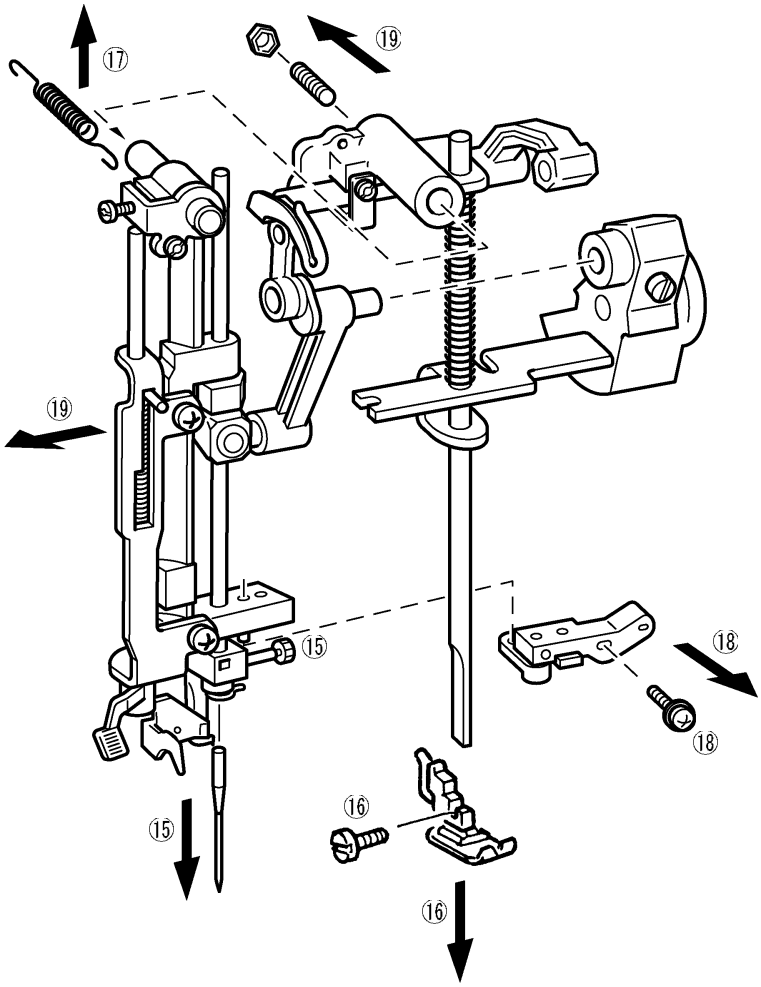

20. Loosen the BH change arm screw, remove the BH change shaft, remove the two screws holding the BH lever installation plate, and then remove the BH lever installation plate assembly. At the same time, remove the torsion spring.
21. Loosen the presser bar clamp screw, take out the presser bar, and then remove the presser bar clamp and presser spring.
22. Take the presser lifting shaft from the arm, then remove the presser lifter.

Disassembly Point

22. Lifting up the presser lifter makes it easier to remove the presser bar. Be careful not to let the presser spring pop out when removing the presser bar.

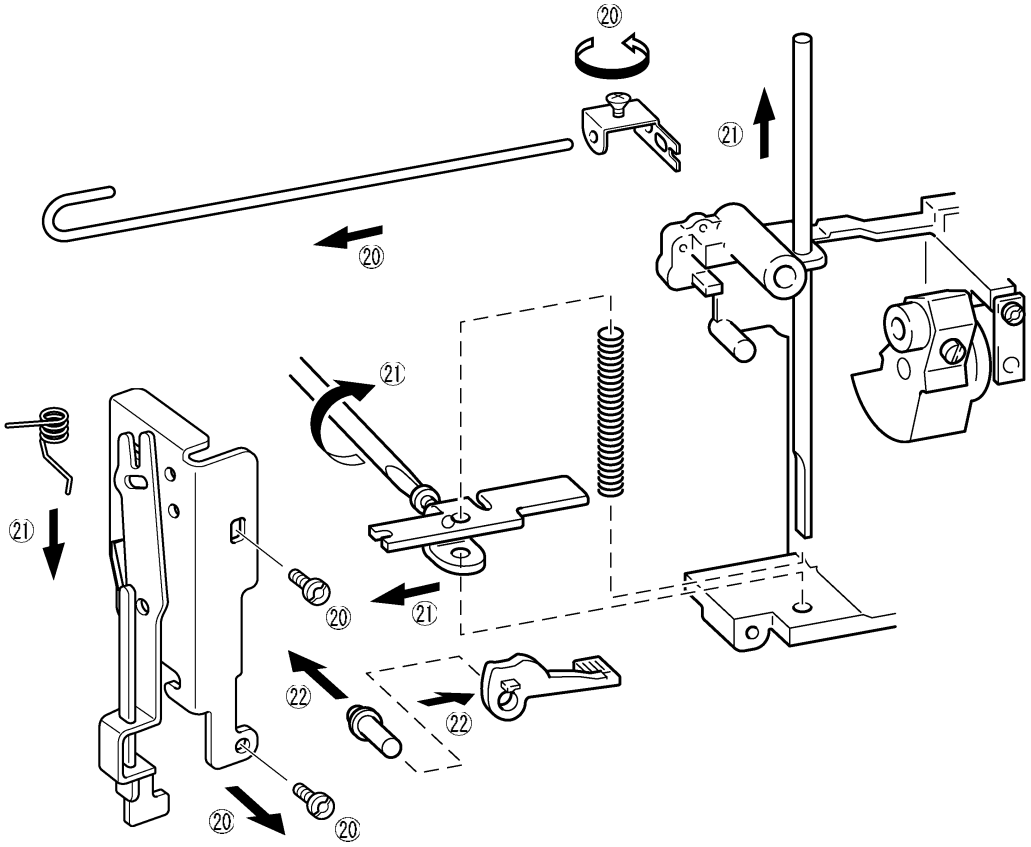

23. Remove the screw holding the thread take-up lever shaft fastening plate, then remove the thread take-up lever shaft.
24. Remove the left thread take-up lever screw, then remove the thread take-up lever.
25. Loosen the thread take-up crank set screw, then remove the needle bar crank and the needle bar crank rod.

Disassembly Point

24. Remove the left thread take-up lever screw by holding the balance wheel by hand so that the upper shaft does not turn and turning the screwdriver to the right.
25. Loosen the thread take-up crank set screw by holding the balance wheel by hand so that the upper shaft does not turn.

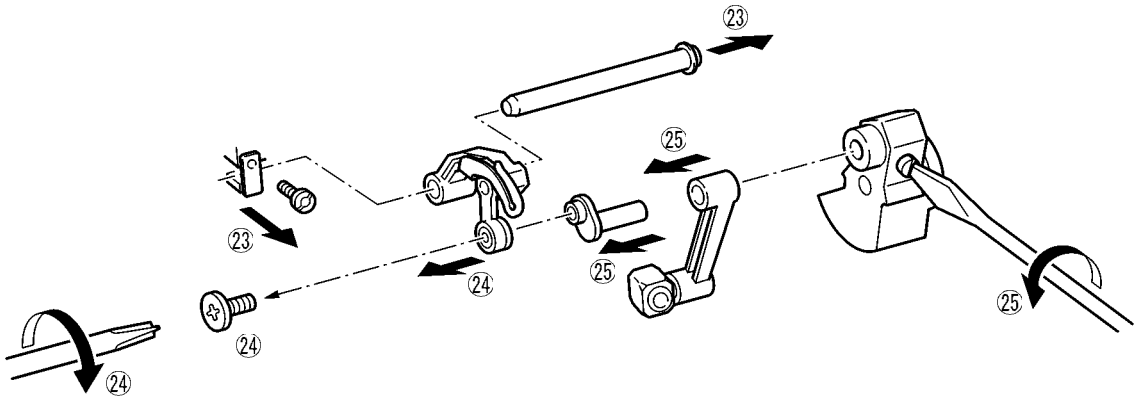

26. Remove the two needle plate screws, then remove the needle plate assembly and the inner rotary hook.
27. Remove the screw holding the inner rotary hook rotation prevention bracket, then remove the inner rotary hook rotation prevention bracket.
28. Remove the screw holding the inner rotary hook left retainer plate, then remove the inner rotary hook left retainer plate.
29. Remove the two screws holding the camber prevention plate, then remove the camber prevention plate.
30. Remove the feed base tension spring.

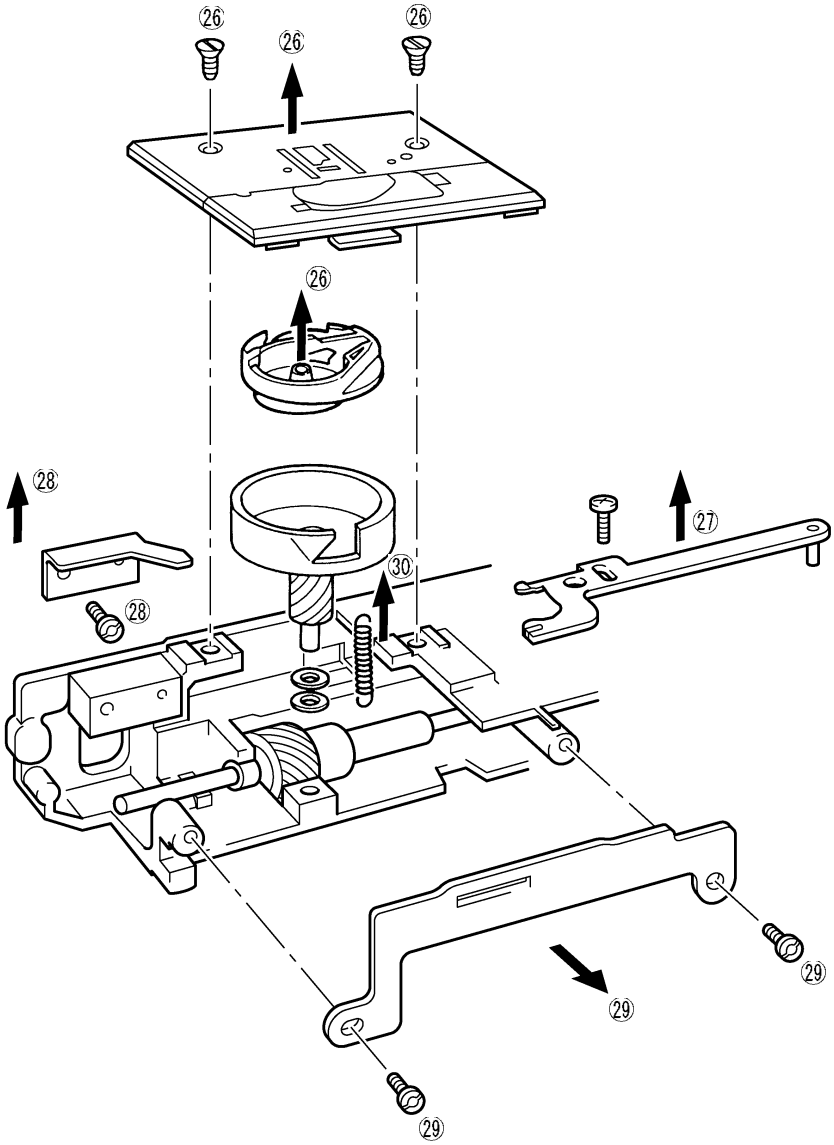

31. Remove the lock ring for the horizontal feed arm shaft, loosen the horizontal feed arm set screw, then remove the horizontal feed arm shaft.
32. Remove the screws holding the horizontal feed assembly center right and the horizontal feed assembly center left, remove the horizontal feed assembly center right and the horizontal feed assembly center left, then remove the horizontal feed shaft assembly.
33. Remove the forked connecting rod.
34. Loosen the rotary hook shaft set screw, then remove the rotary hook assembly, rotary hook shaft, and three washers.
35. Remove the screw holding the tension pulley assembly, then remove the tension pulley assembly.
36. Remove the screw holding the eccentric metal presser and the screw holding the lower shaft metal presser, then remove the lower shaft assembly.

Disassembly Point

32. Be careful not to lose the pressure spring (A) in the horizontal feed assembly center left.

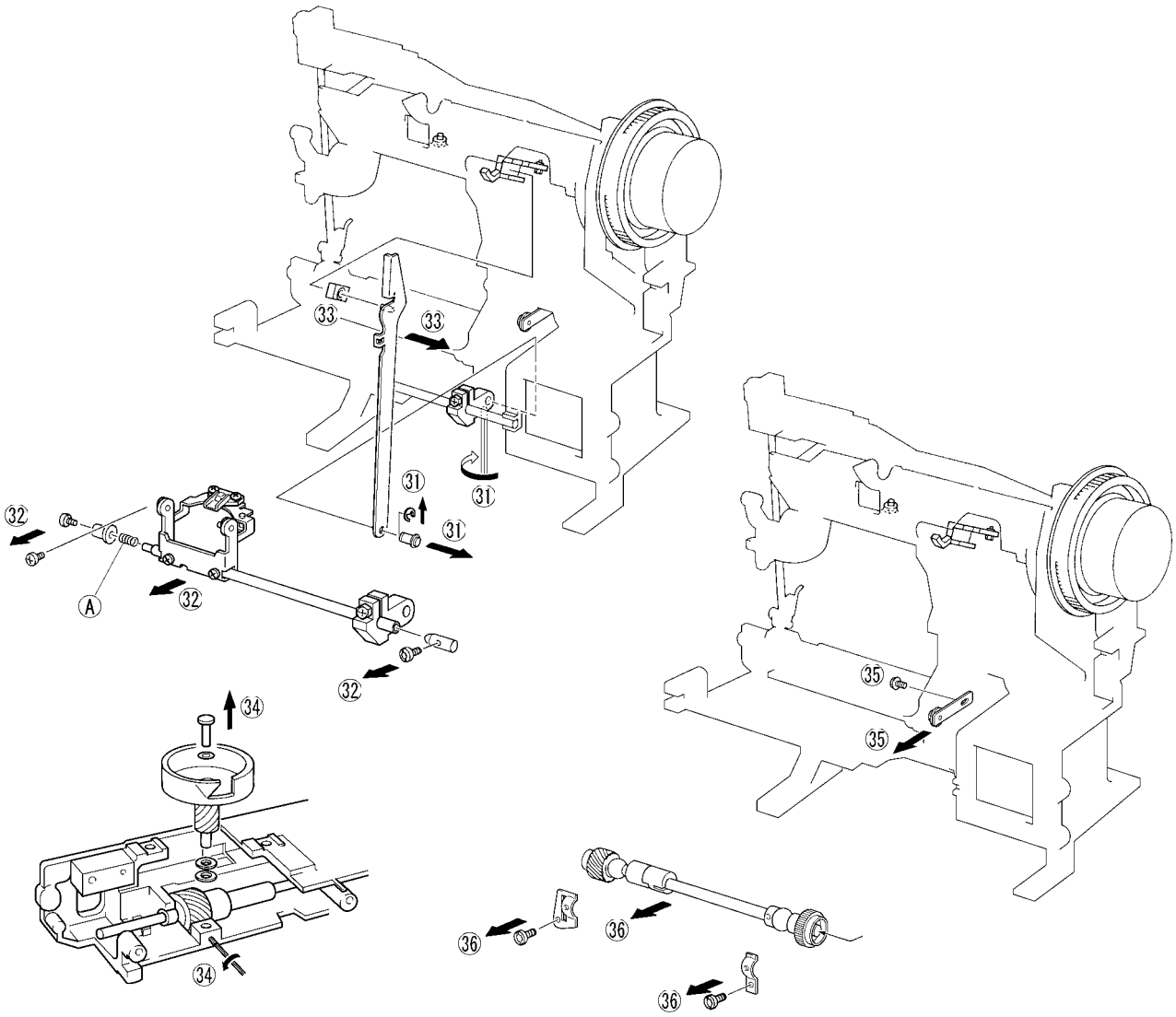

37. Remove the total of two screws securing the left and right metal pressers and remove the upper shaft assembly.
38. Remove the screw securing the fastening plate, then remove the feed regulator and feed regulator shaft.
39. Remove the two screws securing the BH stopper assembly, then remove the BH stopper assembly and spring.
40. Remove the three screws securing the selection unit, then remove the selection unit.
41. Remove the M4 hex screw.
42. Remove the screw securing the presser plate, then remove the selection dial assembly.
43. Remove the CS lock ring, then remove the torsion spring and the thread slack plate C.
44. Remove the three bottom leg rubber pads.
45. Remove the leg adjustment screws.

Disassembly Point

38. When removing the feed regulator, be careful not to lose the plastic washer (A).

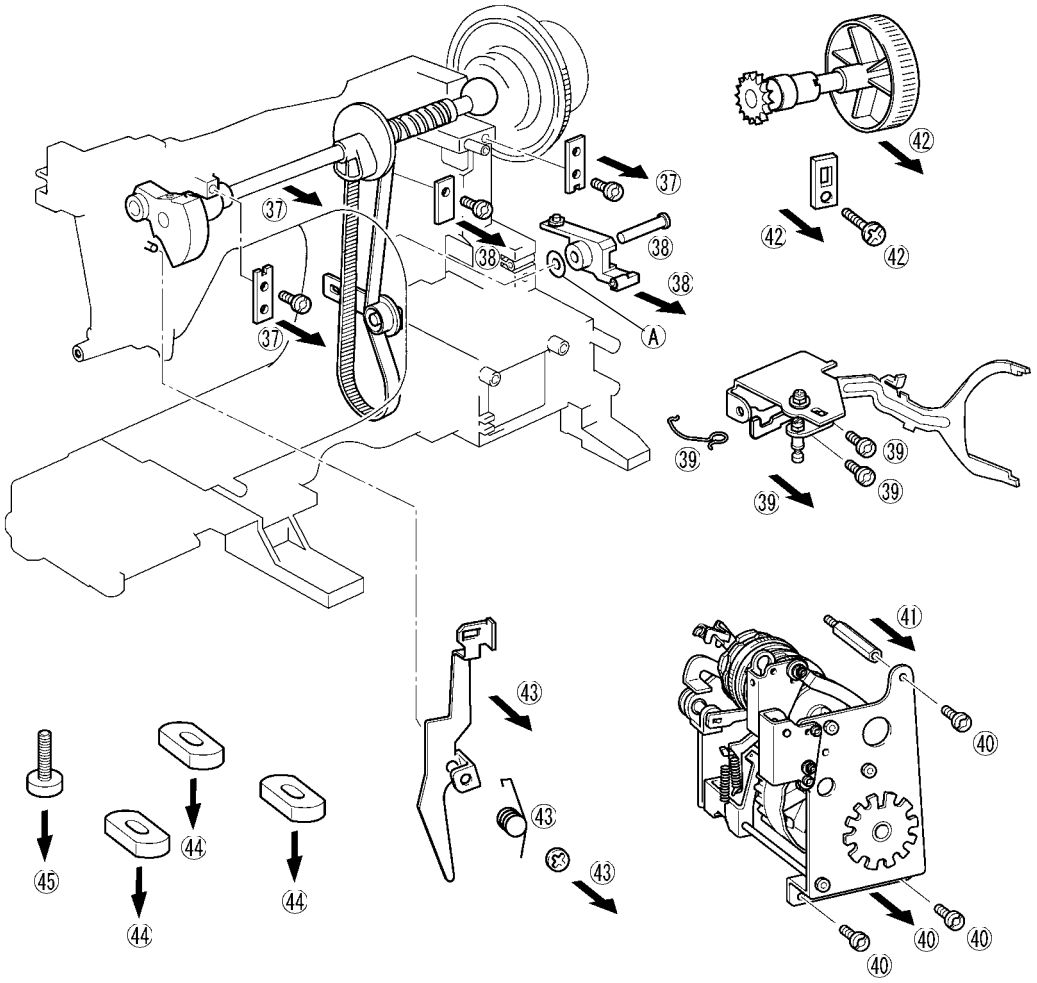

Assembly Procedure

46. Install the leg adjustment screws.
47. Install the three bottom leg rubber pads.
48. Pass the thread slack plate C and torsion spring onto the arm press-fit shaft, hang the torsion spring, then install with the CS lock ring.
49. Install the selection dial assembly with the presser plate and screws.
50. Install the M4 hex screw.
51. Align the selection unit with installation reference hole on the arm rear surface and install with the three screws.
52. Install the BH stopper assembly and spring with the two screws.
53. Pass the feed regulator onto the feed regulator shaft and plastic washer (A), then secure with the fastening plate and screws.

Assembly Points

48. After installing the thread slack plate C, rotate it and check that the force of the torsion spring returns it to its original position.
49. Align the selection dial shaft bearing alignment mark (G) with 20° below the front. (See Adjustment Procedure 15.)
51. Install the selection unit screws in the order (B), (C), then (D).
51. Watch out for backlash between the selection cam gear section and the selection dial assembly gear section. (See Adjustment Procedure 15.)
52. After installing the feed regulator and feed regulator shaft, check that the feed regulator has no axial play and that the feed regulator rotates freely.
53. Insert the plastic washer (A) between the feed regulator and arm.

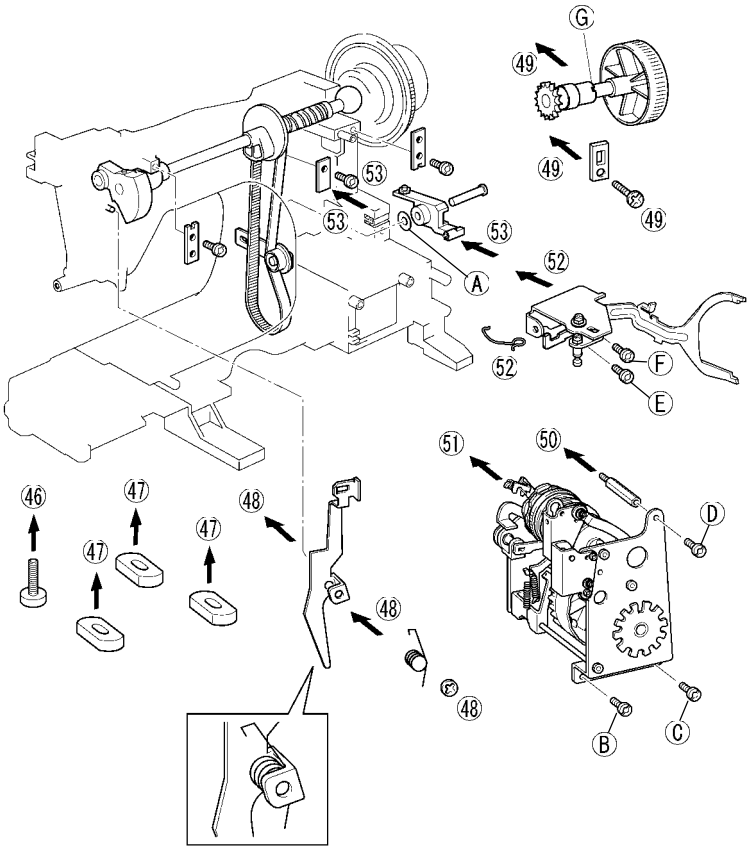

54. Pass the upper shaft through the timing belt and install with the two metal pressers and two screws.

Assembly Point

54. After installing the upper shaft, rotate the balance wheel by hand and check that it rotates freely.

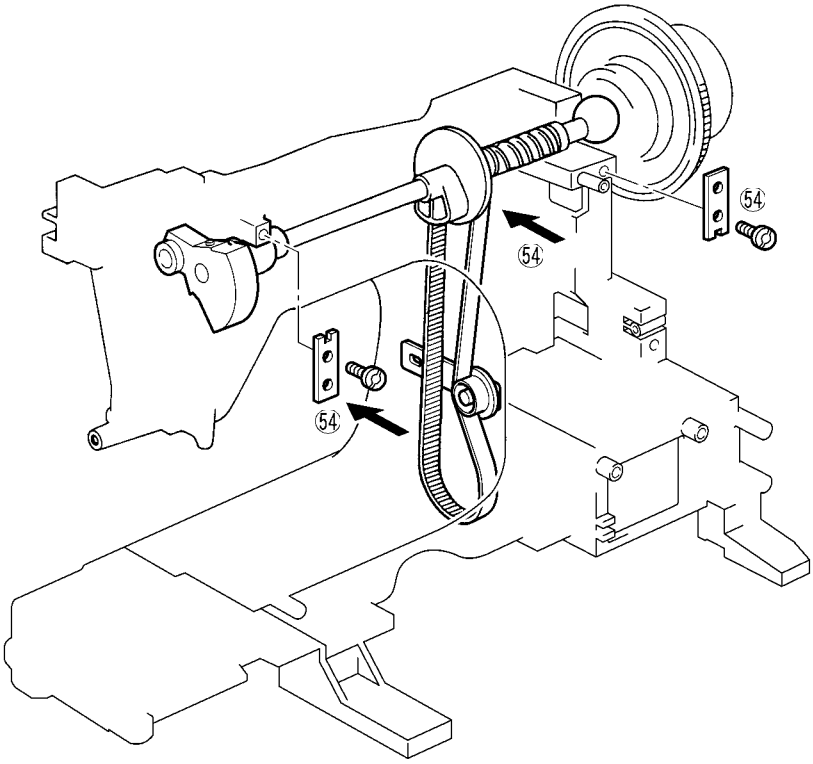

55. Pass the lower shaft section through the timing belt and secure with the eccentric metal presser (left side), the lower shaft metal presser (right side), and install with the two screws. Align the timing of the upper shaft and lower shaft. (See Adjustment Procedure 2.)
56. Secure the tension pulley assembly with the screw and install while adjusting the tension of the timing belt. (See Adjustment Procedure 3.)
57. Pass the spacer U, rotary hook assembly, spacer, and flat washer (thin) onto the rotary hook shaft in that order and secure with the screw.

Assembly Points

55. When installing the lower shaft, check that the lower shaft rotates freely, then align the timing of the upper and lower shafts and hang the timing belt on the upper shaft and lower shaft pulleys. (See Adjustment Procedure 2.)
56. When adjusting the tension of the timing belt with the timing pulleys, check the upper shaft and lower shaft timing. (See Adjustment Procedure 2.)
57. Install the spacer under the rotary hook assembly passed onto the rotary hook shaft with the thicker side facing up. After the rotary hook assembly is installed, check that the rotary hook assembly has no vertical play.

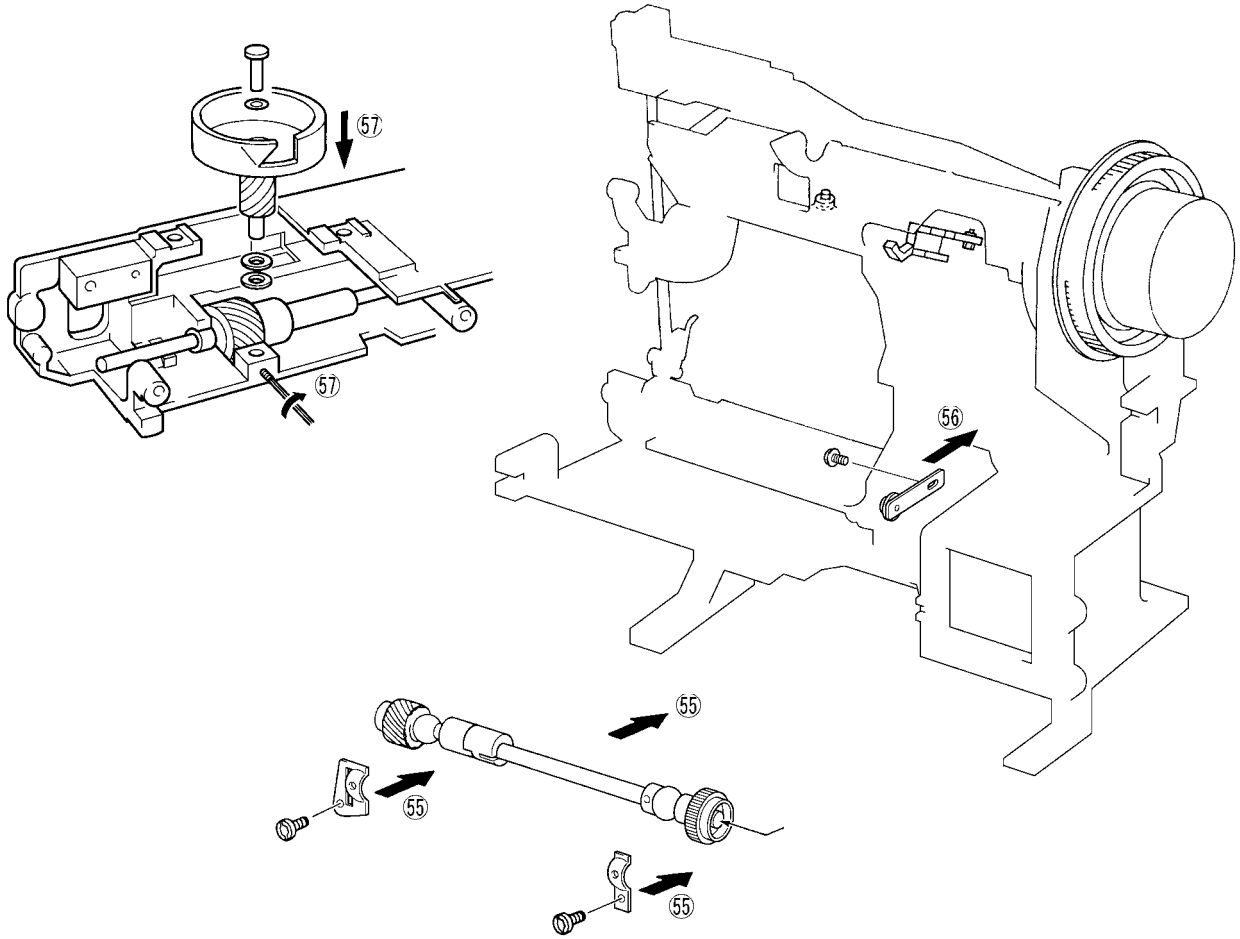

58. Insert the square block onto the forked connecting rod shaft and fit in the feed regulator square block groove.
59. Install the horizontal feed assembly center left with the screw.
60. Put the horizontal feed shaft push spring into the horizontal feed assembly center left and while compressing the spring, install the horizontal feed shaft assembly with the horizontal feed assembly center right and screw.
61. Pass the horizontal feed arm shaft through the horizontal feed arm and install the forked connecting rod.
62. Install the lock ring on the horizontal feed shaft and fasten with the horizontal feed arm set screw.
63. Hang the tension spring for forked connecting rod.

Assembly Points

60. After installing the horizontal feed shaft assembly, push the horizontal feed shaft assembly to the left, apply pressure to the spring (A) and check that the horizontal feed shaft assembly returns to its original position.
62. Check that there is no axial play between the horizontal feed arm and forked connecting rod.

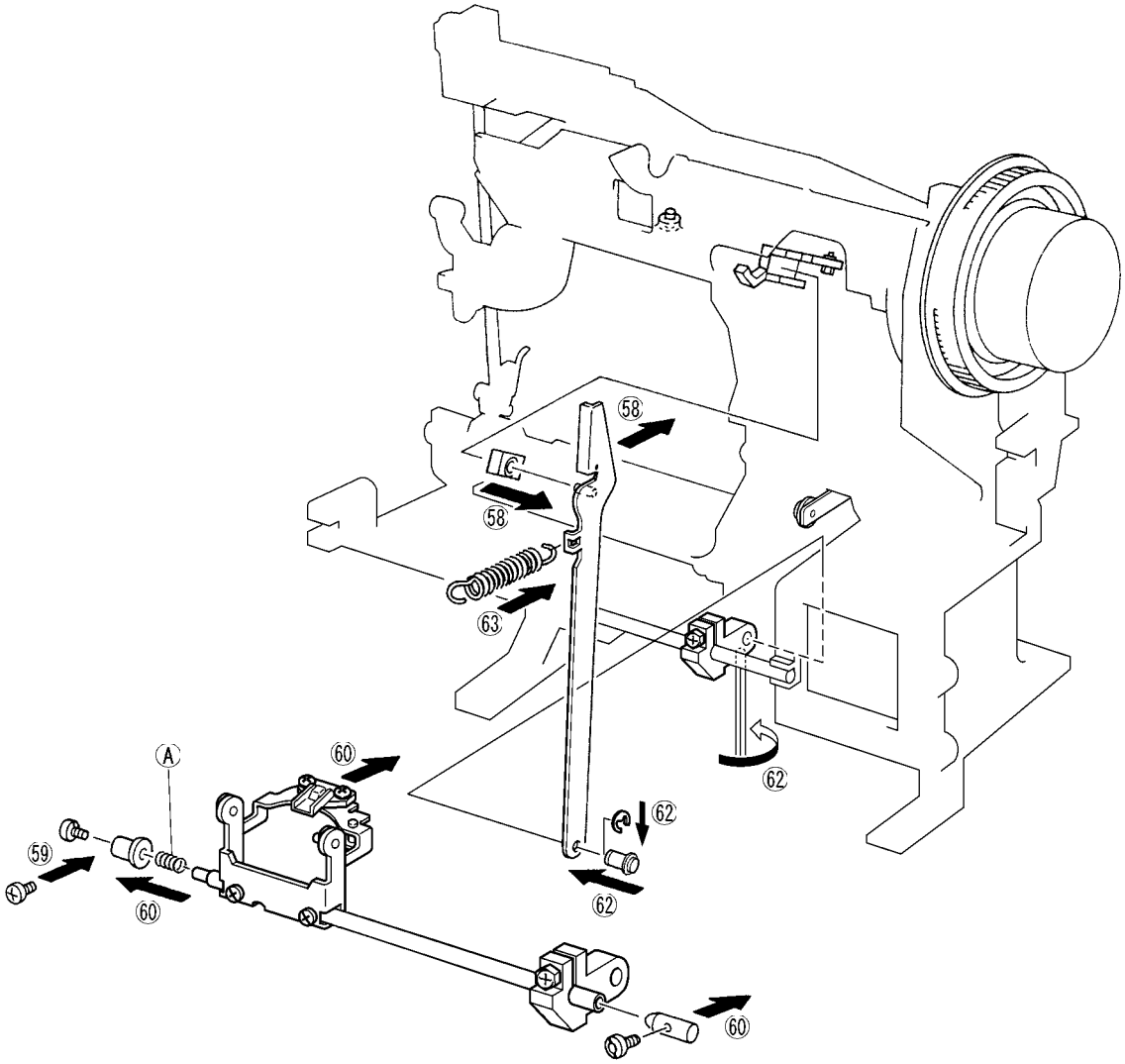

64. Hang the feed base tension spring.
65. Install the camber prevention plate with the two screws.
66. Put the inner rotary hook in place and install the inner rotary hook left retainer plate with the screw. (See Adjustment Procedure 9.)
67. Install the inner rotary hook rotation prevention bracket with the screw. (See Adjustment Procedure 10.)
68. Install the needle plate assembly with the screw and check the feed teeth left-right position. (See Adjustment Procedure 11.)

Assembly Point

67. Screw the inner rotary hook rotation prevention bracket screw (C) into screw hole (A), not (B). If you screw it into (B), it will not be possible to install the needle plate assembly correctly.

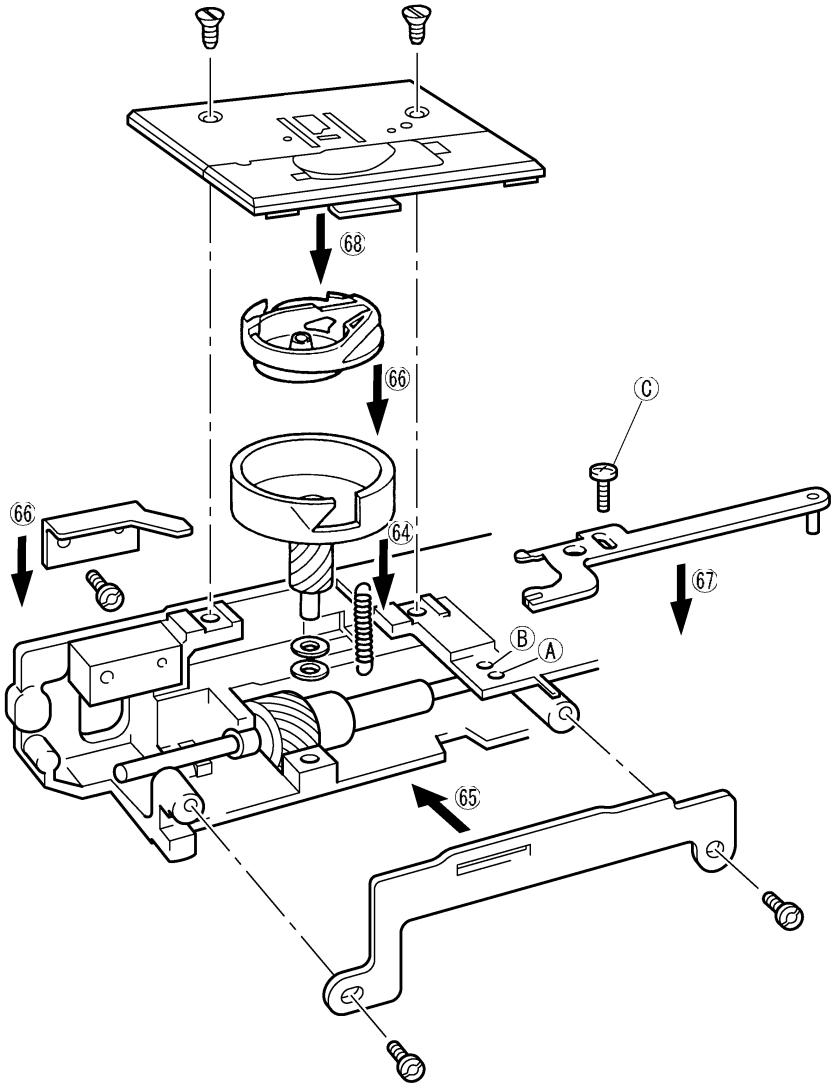

69. Put the needle bar crank rod onto the needle bar crank shaft and install on the thread take-up crank with the set screw. Be careful about the flat surface the screw contacts with.
70. Install the thread take-up lever on the needle bar crank with the left screw.
71. Insert the thread take-up lever support between the thread take-up lever and the thread take-up lever shaft and install the thread take-up lever shaft with the fastening plate and the screw.

Assembly Points

69. Check that the needle bar crank rod has no axial play.
    Check that the needle bar crank rod rotates freely.
69. Fasten with the contact surface (flat surface) of the needle bar crank rod screw at the screw (A) side. When installing the screw (A), hold the balance wheel by hand so that the upper shaft does not rotate.
70. Hold the balance wheel by hand so that the upper shaft does not rotate ad rotate the driver to the left to tighten the thread take-up lever left screw.
71. Install so that there is no clearance between the thread take-up lever support right side surface and the lock ring. If there is a large clearance, left-right play of the thread take-up lever will generate abnormal noise (thread take-up lever rattling). Also, turn the upper shaft by hand and check that rotates freely.

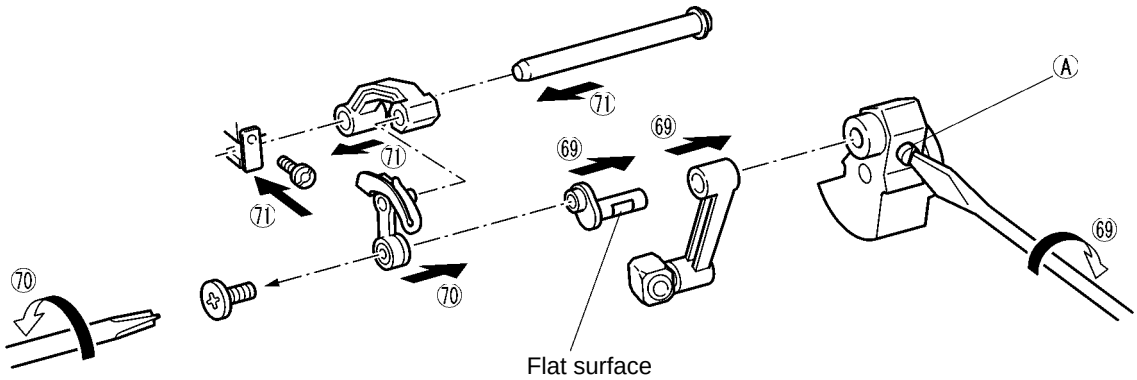

72. Install the presser lifter shaft on the arm and install the presser lifter.
73. Pass the presser bar over the presser spring and presser bar clamp.
    Temporarily tighten the presser bar screw. (See Adjustment Procedure 13.)
74. Install the torsion spring on the BH lever installation plate, install the BH lever installation plate with the two screws, then install the BH change shaft, and fasten with the screw.

Assembly Points

73. Pass the presser bar through the presser spring and presser bar clamp while compressing the presser spring. Be careful that the presser spring does not pop out. After installing the presser bar, move the presser lifter up and down and check it moves freely.
74. Set the BH lever installation plate in the presser bar clamp groove.

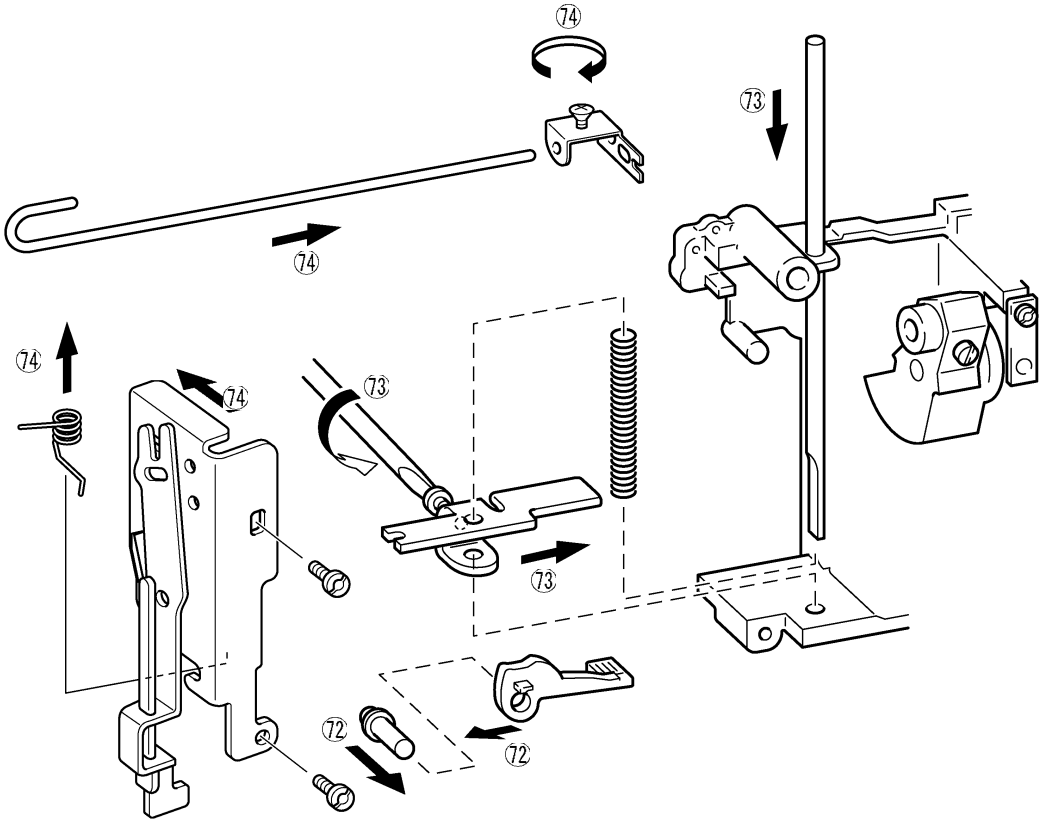

75. Insert needle bar block assembly shaft into the arm hole, insert the needle bar holder shaft into the needle bar crank rod, then install the needle bar block assembly. Screw in the setscrew from the rear of the arm, position the needle bar block assembly forward and rear and tighten the lock nut. (See Adjustment Procedure 7.)
76. Install the needle bar supporter stud holder assembly with the screw.
77. Hang the needle bar block assembly tension spring on the arm and needle bar block assembly.
78. Install the presser clamp on the presser bar with the screw and install the presser foot.
79. Install the needle and tighten the needle set screw.

Assembly Points

75. If the upper shaft is set to the phase with the needle bar at its lowest point, it is easier to insert the needle bar holder shaft into the needle bar crank rod.

75. Hang the BH lever installation plate torsion spring.

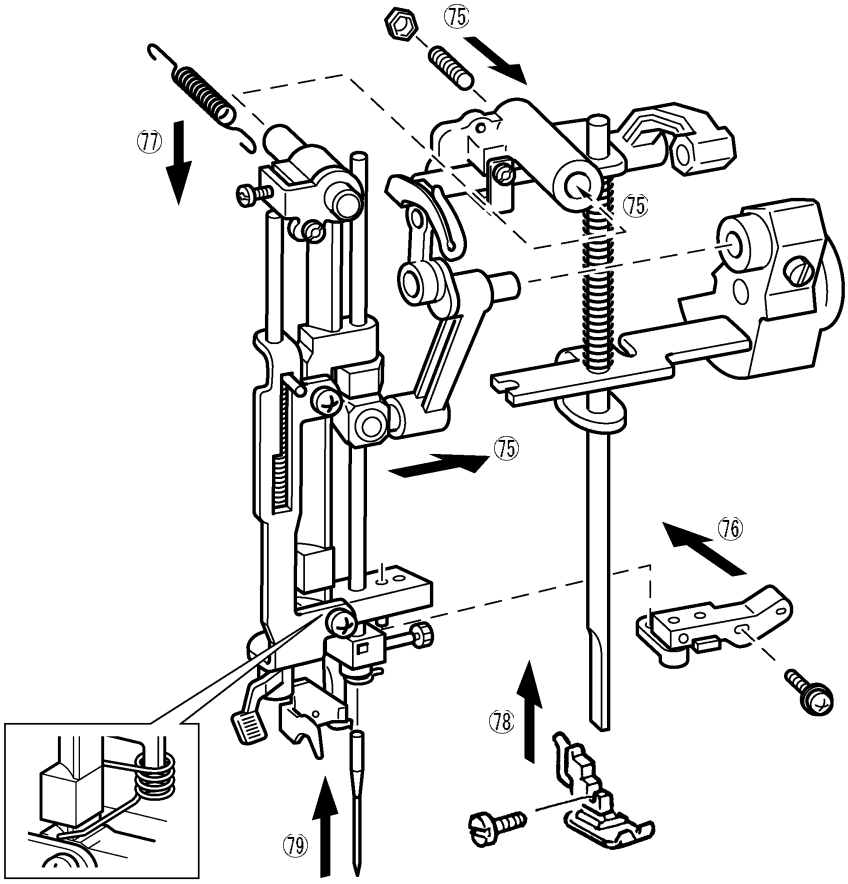

80. Align the feed bracket assembly fear section and install with the two tightening screws. (See Adjustment Procedure 18.)
81. Hang the feed regulator tension spring on the feed bracket assembly and feed regulator.
82. Install reverse sewing lever B on the arm and hang the tension spring on the reverse sewing lever B and feed bracket assembly.
83. Install reverse sewing lever A with the screw and lock ring.
84. Install the Zigzag connecting rod on the selection unit with the lock ring, tighten with the two screws, install on the needle bar block assembly with the Zigzag adjustment nut, hang the spring, for forked connecting rod hang the tension spring on the oscillating link and screw. Install the Zigzag dial assembly with the two screws and install with the lock ring.
85. Install the thread tension connecting rod assembly with the two screws.

Assembly Points

80. Install the feed bracket assembly screws in the order (A), then (B). After installing the feed bracket assembly, be careful about backlash at the feed bracket assembly gear. (See Adjustment Procedure 18.)
81. Hang the feed regulator tension spring with the shorter hook section on the feed bracket assembly.
84. Hang the feed regulator tension spring with the longer hook section on the feed bracket assembly.
84. Install the Zigzag adjustment nut with the hex nut section facing up.
85. When installing the thread tension assembly, lower the presser lifter and pass the thread tension assembly thread slack plate B tip D through the (C) hole in thread slack plate C. After installing the thread tension assembly, raise and lower the presser lifter and check that the thread tension adjuster plate opens and closes.

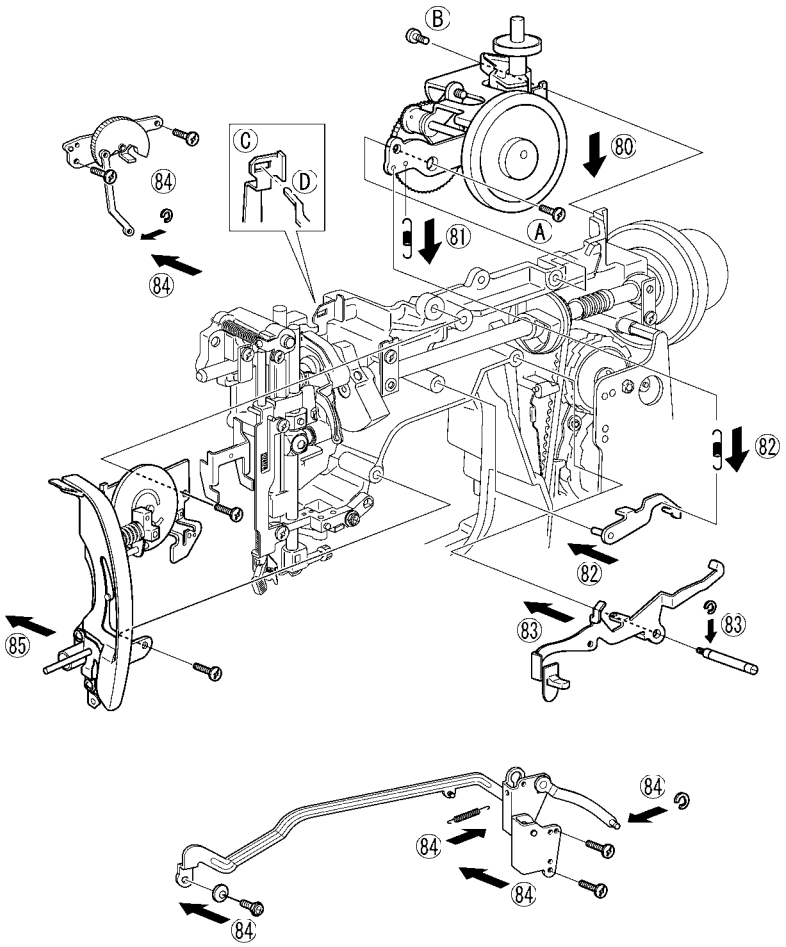

86. Install the motor (motor holder) with the two screws, and then hang the driving belt.
(See Adjustment Procedure 3.)
87. Tighten the cord clamp and install with the screw.
88. Install the 3-pin socket holder assembly with the two screws, then fasten the lamp cord with the three bundling bands.

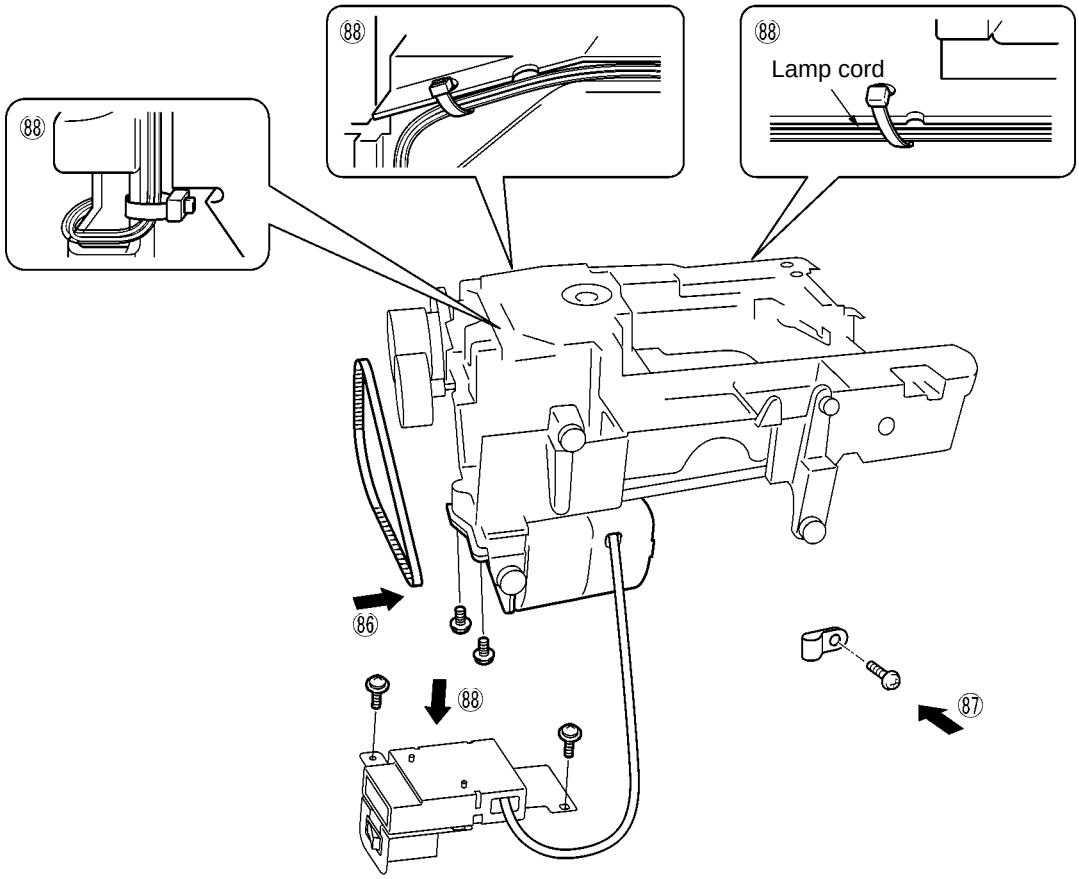

89. Lower the presser lifter and install the rear cover and handle with the four screws (two on the front, one on the rear and one on the bottom).
90. Install the front cover with the six screws (three on the rear side, two on the bottom, and one on the left side).
91. Install the surface plate with the screw.
92. Install the flat bed attachment.

Assembly Points

90. Pass the thread tension assembly and feed bracket assembly dial and Zigzag dial through the hole in the front cover and fit the front cover in place from above. At this time, make sure that the pattern selected with the selection dial and the pattern displayed on the front cover match. Install with the front cover pattern display and the selection unit set to Pattern No. 1 (BH).

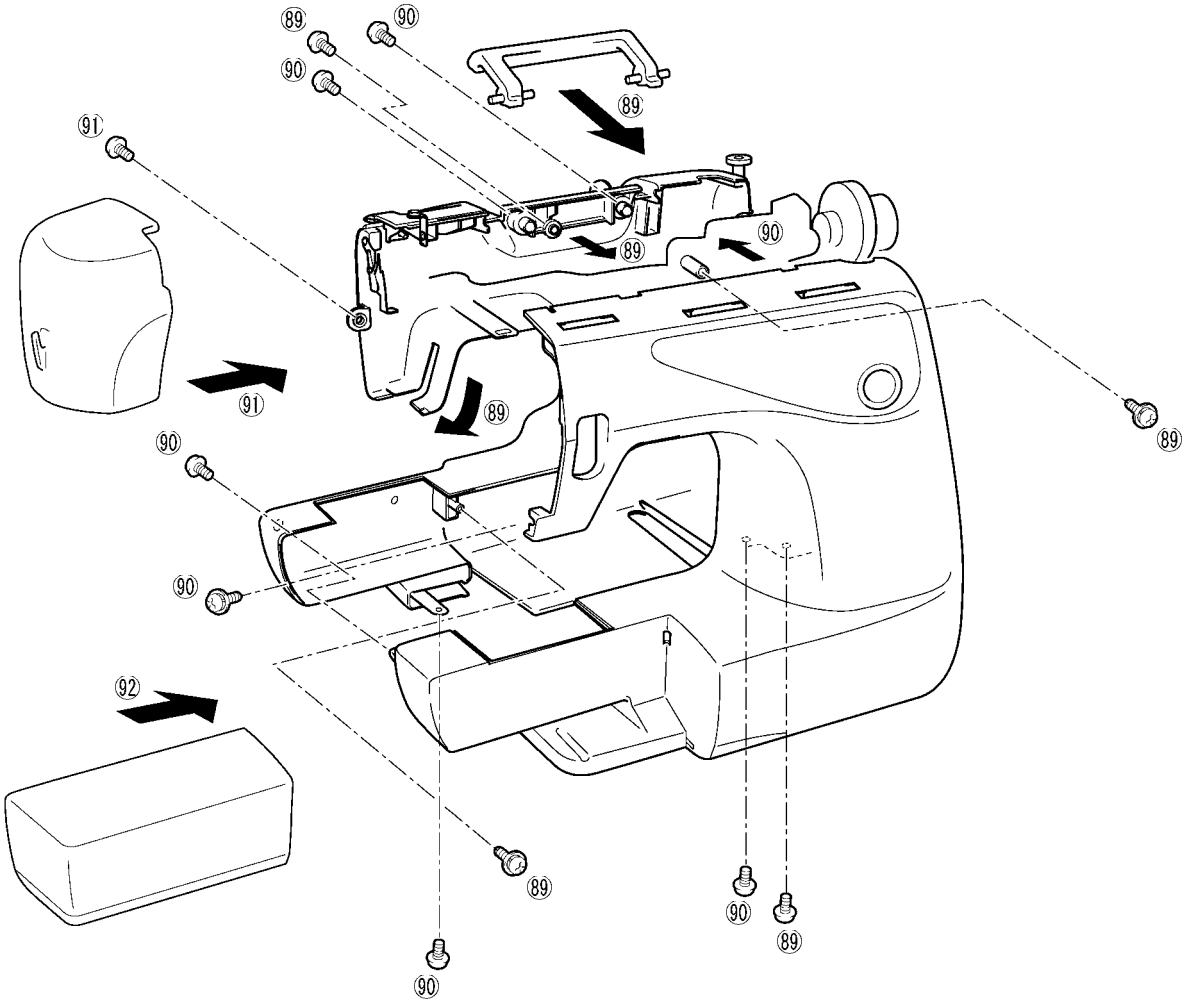

2. LEAD WIRES ARRANGEMENT

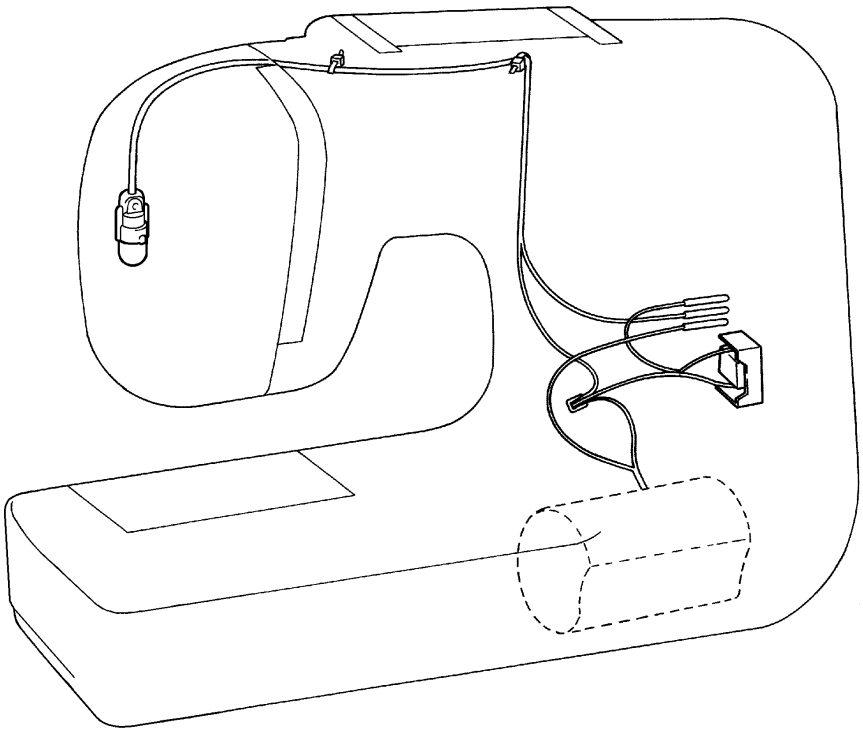

III. MECHANICAL ADJUSTMENT STANDARDS AND ADJUSTMENT PROCEDURES

1. SELECTING UNIT SECTION ADJUSTMENTS 29
2. UPPER SHAFT AND LOWER SHAFT TIMING 30
3. DRIVING BELT AND TIMING BELT TENSION 31
4. NEEDLE DOWN POSITION ADJUSTMENT 32
5. NEEDLE FLOW 33
6. LEFT STRAIGHT LINE SEWING NEEDLE DESCENT AND THE ZIGZAG MAXIMUM LEFT NEEDLE DESCENT ALIGNMENT 34
7. TIMING OF NEEDLE AND ROTARY HOOK ASSEMBLY (CLEARANCE BETWEEN THE NEEDLE AND THE ROTARY HOOK POINT) 35
8. NEEDLE BAR HEIGHT 36
9. INNER ROTARY HOOK RETAINER PLATE L POSITION 37
10. INNER ROTARY HOOK ROTATION PREVENTION BRACKET POSITION 38
11. FEED DOG FRONT-REAR AND LEFT-RIGHT POSITION 39
12. FEED DOG HEIGHT 40
13. PRESSER BAR HEIGHT 41
14. THREAD TENSION DIAL TENSION 42
15. SELECTION DIAL OUTER EDGE PLAY 43
16. PATTERN DISPLAY SELECTION POSITIONING 44
17. Z FINGER POSITIONING 45
18. FEED BRACKET INSTALLATION POSITION 46
19. SUPER PATTERN (TRIPLE SEWING) 47
20. FEED ADJUSTMENT 48
21. BH LEFT NEEDLE DESCENT AND ZIGZAG MAXIMUM LEFT NEEDLE DESCENT ALIGNMENT 49
22. BUTTON HOLE STITCH LEFT REVERSE STITCH AND RIGHT FORWARD STITCH LENGTH 50
23. BUTTON HOLE STITCH BAR TACK FEED ADJUSTMENT 51
24. BUTTON HOLE STITCH BUTTON HOLE LENGTH 52
25. THREAD WINDING ADJUSTMENT 53
26. FORWARD AND REVERSE STITCH LENGTH (STRAIGHT LINE STITCH LENGTH) 54
27. INNER ROTARY HOOK TENSION 54
28. NEEDLE THREADER 55
29. NEEDLE THREADER (CHECKING THE HOOK POSITION IN THE HORIZONTAL DIRECTION) .. 56
30. NEEDLE THREADER (EXCHANGE) 57

1. SELECTING UNIT SECTION ADJUSTMENTS

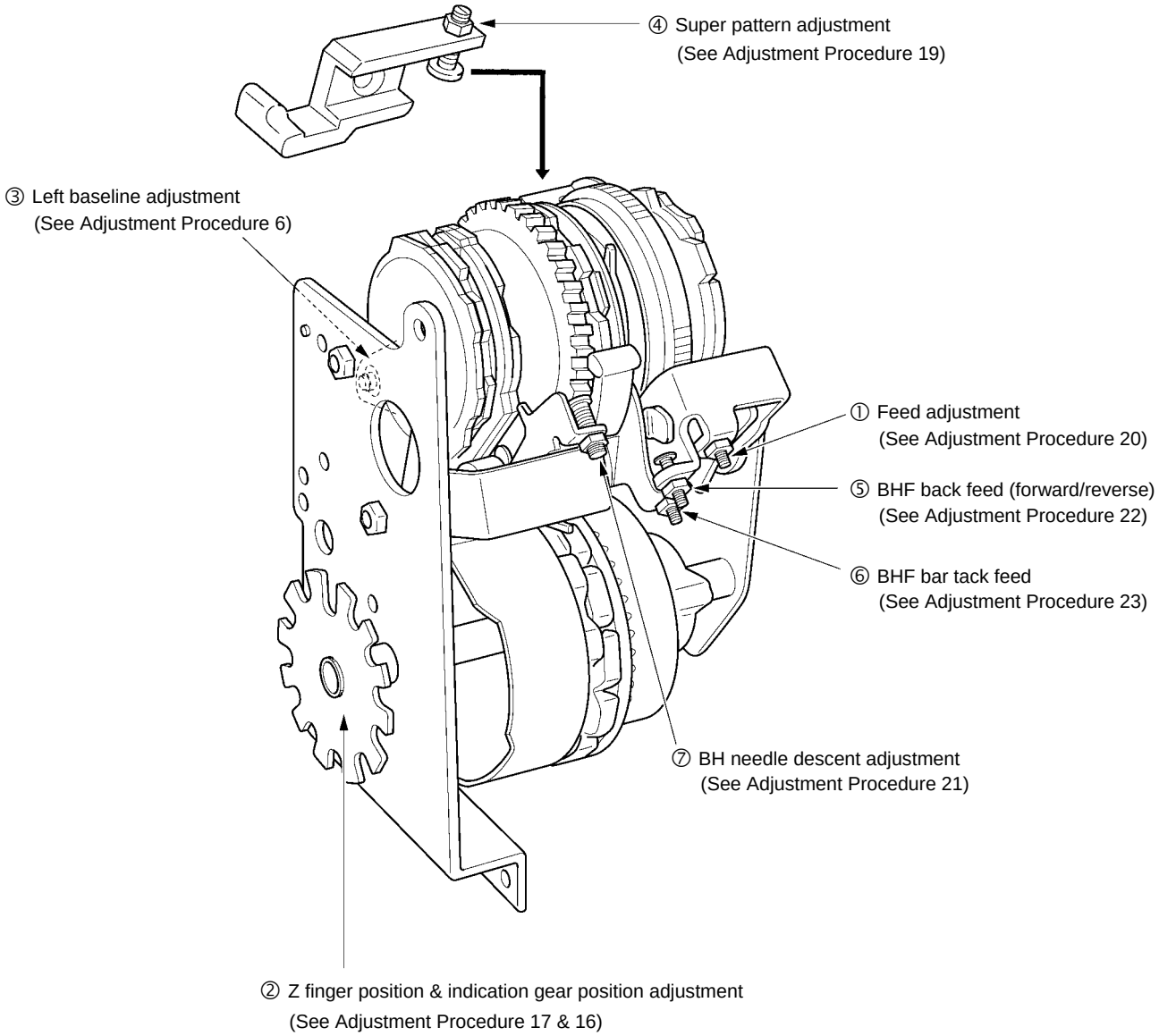

2. UPPER SHAFT AND LOWER SHAFT TIMING

Adjustment Standard

The alignment mark for the upper shaft horizontal feed cam pulley and the alignment mark for the lower shaft timing pulley should be at the front of the sewing machine. (Turn the balance wheel forward.)

Adjustment Procedure

1. Remove the timing belt from the upper shaft horizontal feed cam pulley section and the tension pulley and the lower shaft timing pulley.
2. Align the alignment mark for the upper shaft horizontal feed cam pulley and the alignment mark for the lower shaft timing pulley with the front of the sewing machine.
3. Hang the timing belt from the upper shaft horizontal feed cam pulley section and tension pulley and lower shaft timing pulley.

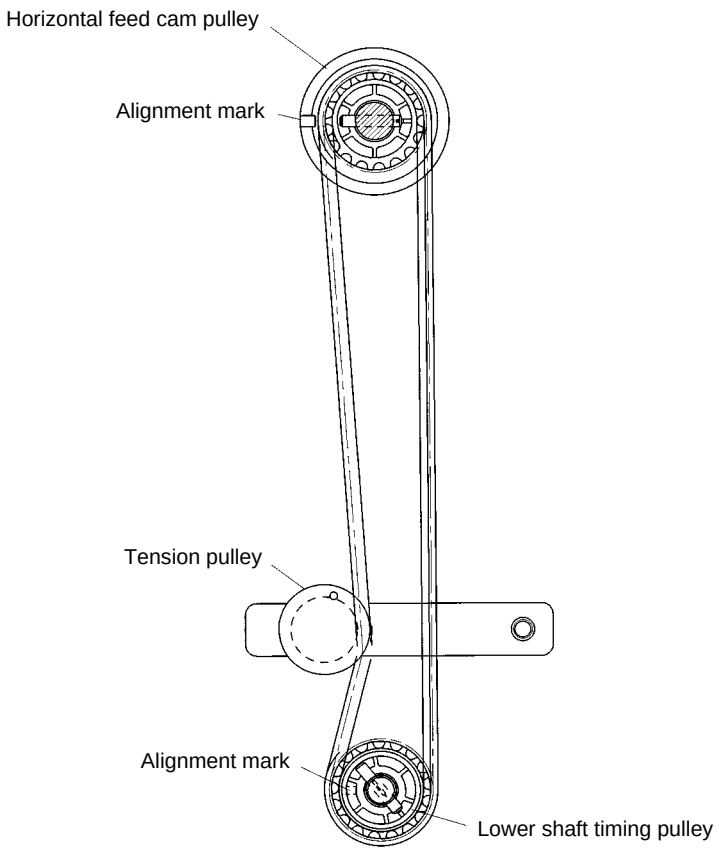

3. DRIVING BELT AND TIMING BELT TENSION

STANDARD

There should the 4-6 mm slack in the driving belt when the driving belt upper shaft pulley and motor pulley center are pressed gently with a finger (Reference Figure 2N) with a force of approximately 200 g. There should be 3-4 mm slack in the timing belt when the timing belt upper shaft horizontal feed cam pulley and tension pulley center are pressed slightly strongly with a finger (Reference Figure 3N) with a force of approximately 300 g.

ADJUSTMENTS

1. Loosen the two screws holding the motor holder.
2. Adjust the position of the motor holder to adjust the tension on the driving belt.
3. Secure the motor holder with the two screws.
4. Loosen the screw holding the tension pulley.
5. Adjust the timing belt tension by moving the tension pulley assembly position forward and back.
6. Secure the tension pulley assembly with the screw.

Adjustment Points

∗ Driving belt

* Unplug the power cord before adjusting the driving belt. (This is done to avoid the possibility of electrical shock.)

* If the driving belt tension is not correctly adjusted, the problems below may occur.

1. If the driving belt tension is too great, the torque may become excessive, causing the motor to rotate slower and generate an irregular noise.
2. If the driving belt tension is too low, the driving belt may jump and the upper shaft may not rotate smoothly when sewing on denim and other thicker fabrics or overlapping fabrics and the motor may rotate unevenly or the upper shaft may not rotate.

* If the timing belt tension is too low, the belt may jump while sewing on denim and others thicker fabrics or overlapping fabrics or the feed timing or the closeness of the needle and rotary hook assembly may prevent sewing.

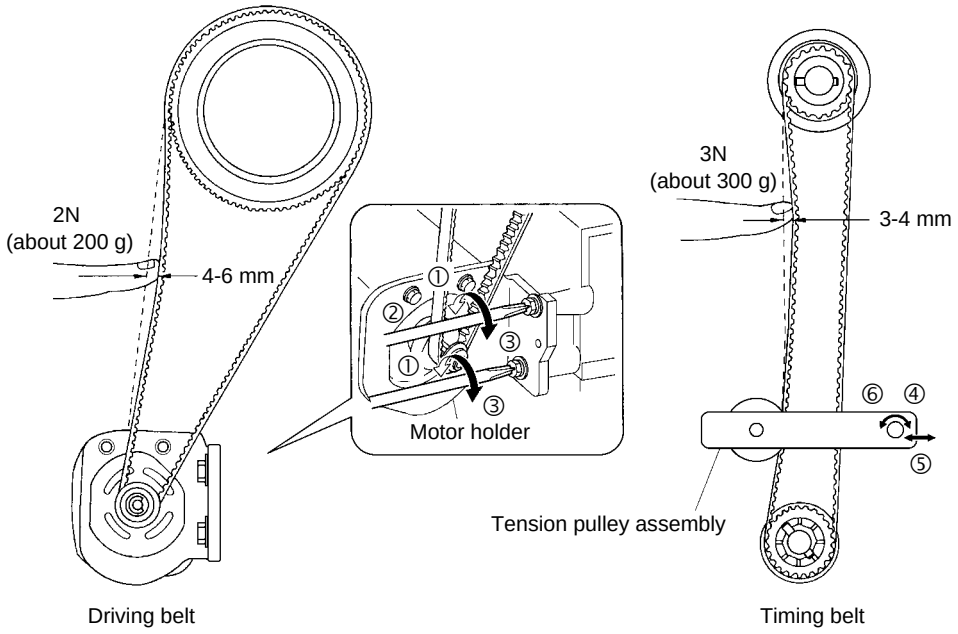

4. NEEDLE DOWN POSITION ADJUSTMENT

STANDARD

The needle descent for zigzag sewing should be such that the needle descends evenly to the center of the needle hole in the needle plate.

ADJUSTMENT

1. Turn the selection dial, set the pattern display to zigzag and turn the Zigzag dial to the maximum.
2. Turn the balance wheel, lower the needle and turn the Zigzag dial to 0. (At this time, the needle bar moves to the right.)
3. Loosen the two screws for the Zigzag dial assembly.
4. Move the Zigzag dial assembly to position at which the needle does not move left and right even when the Z finger is moved.
5. Tighten the two screws for the Zigzag dial assembly.
6. Turn the balance wheel through position where the Z finger mounts the peak of the pattern cam.
7. Loosen the screw holding the eccentric nut (A), turn the eccentric nut (A) with a spanner, and tighten the eccentric nut (A) screw at a position where the needle does not moves even if the Zigzag dial is turned 0 and maximum.
8. Loosen the screw securing the eccentric nut (B), turn the balance wheel, lower the needle left and right, turn the eccentric nut (B) with a spanner, and tighten the eccentric nut (B) screw so that the left and right needle descent are symmetric about the center of the steel plate hole.

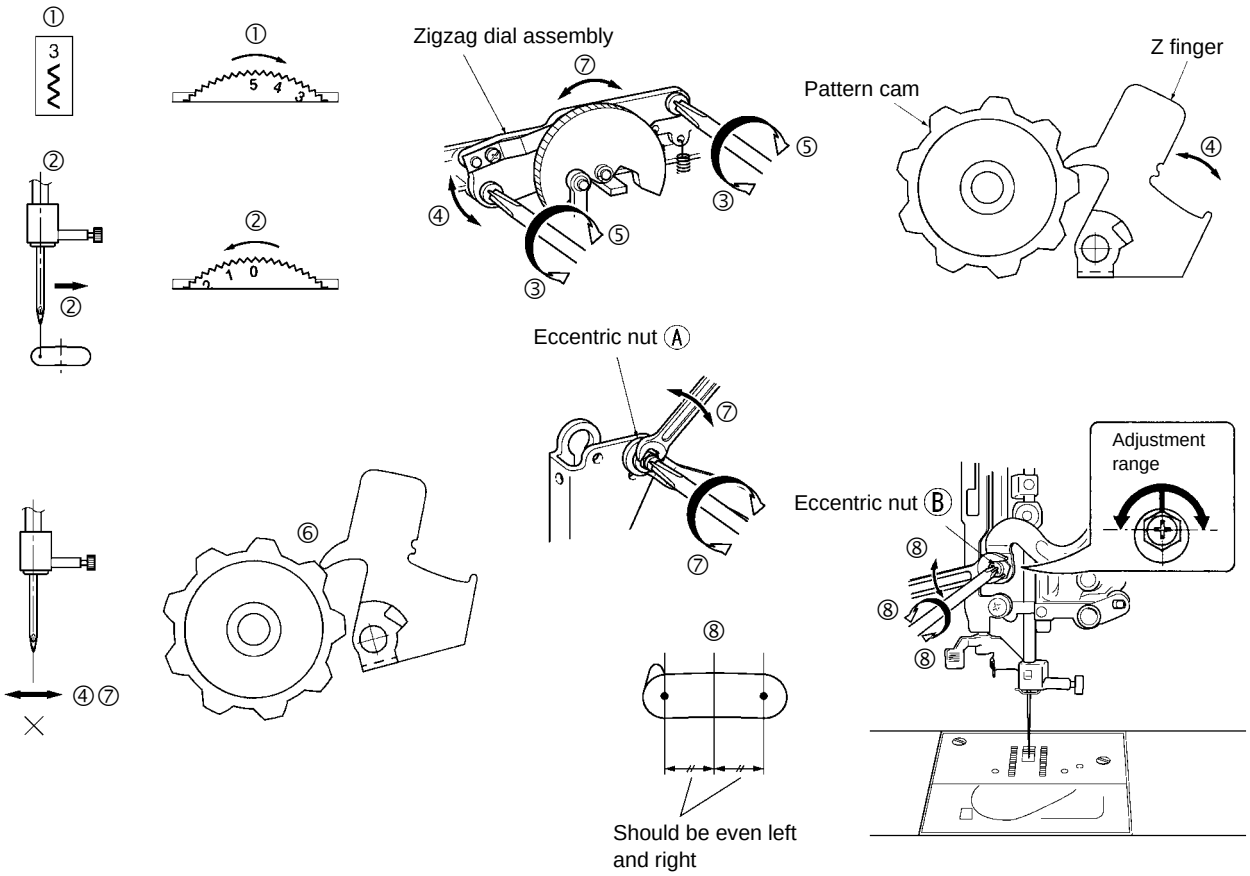

5. NEEDLE FLOW

STANDARD

For zigzag sewing, the distance from the needle plate upper surface to the tip of the needle (#14) when the needle bar starts oscillating movement should be 5.6±0.4 mm. Also, the distance from the needle plate top surface to the needle (#14) tip when the needle bar oscillating movement stops must be 7.8±0.4 mm.

ADJUSTMENT

1. Turn the selection dial to select zigzag sewing.
2. Turn the Zigzag dial to the maximum.
3. Loosen the three screws securing the worm gear.
4. Turn the balance wheel, raise the needle bar from bottom dead center, and fasten the needle bar at a position where the distance from the needle plate top surface to the needle tip (#14) is 5.6 mm.
5. Turn the worm gear or pattern cam to put the Z finger and pattern cam in the state shown in Figure A.
6. Tighten the three screws securing the worm gear.
7. Turn the balance wheel and check how the needle flows.

Adjustment Points

6. At this time, adjust the meshing of the worm gear and pattern cam gear. Adjust the meshing so that the play on the pattern cam is no more than 0.1 mm at the outer edge of the cam and so that the balance wheel turns freely by hand.

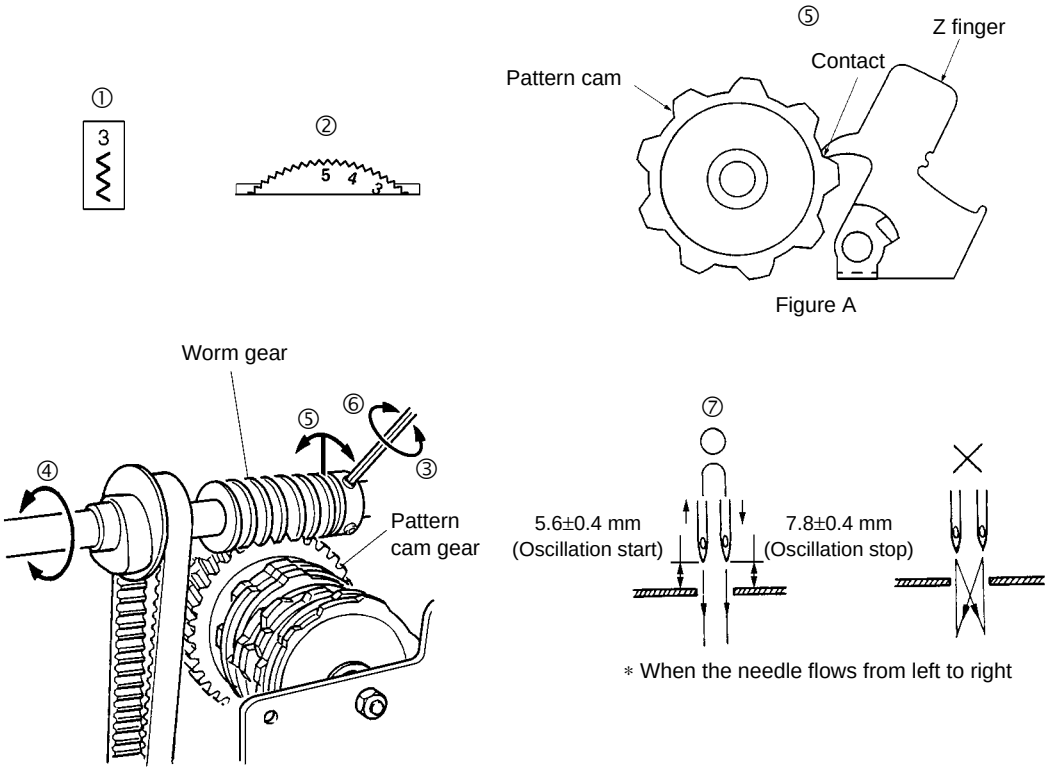

6. LEFT STRAIGHT LINE SEWING NEEDLE DESCENT AND THE ZIGZAG MAXIMUM LEFT NEEDLE DESCENT ALIGNMENT

STANDARD

The left straight line sewing needle descent and zigzag maximum left needle descent should match.

ADJUSTMENT

1. Put the feed dog cover on the needle plate and lay paper underneath the presser foot.
2. Turn the selection dial, turn the Zigzag dial to the maximum, set to Zigzag sewing, and turn the balance wheel so that the needle falls to the left.
3. Turn the balance wheel and drill a small hole in the paper with the tip of the needle for left needle descent.
4. Turn the selection dial and left straight line sewing.
5. Loosen the screw securing the eccentric nut.
6. Adjust the eccentric nut so that the tip of the needle comes to the position of the hole drilled in 3.
7. Tighten the screw securing the eccentric nut.

Adjustment Points

6. In left straight line sewing, when the eccentric nut is turned to the right, the needle descent moves to the left.
7. When fastening the eccentric nut with the screw, install the screw with the eccentric nut held in place with a box driver so that the positioning is not lost.

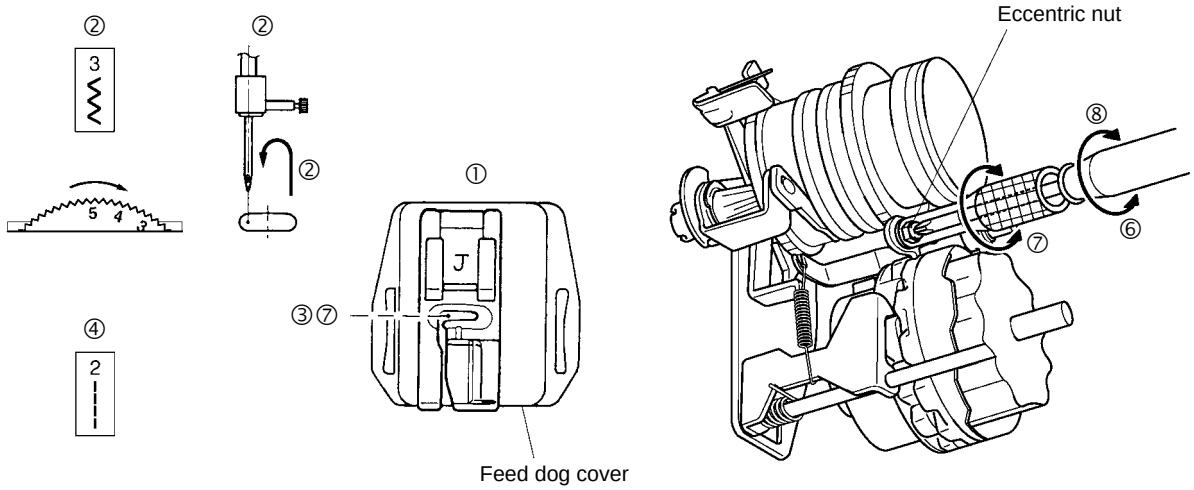

7. TIMING OF NEEDLE AND ROTARY HOOK ASSEMBLY (CLEARANCE BETWEEN THE NEEDLE AND THE ROTARY HOOK POINT)

STANDARD

For left straight line sewing, the rotary hook assembly point and the needle outer edge should match when the needle rises 2.75-3.15 mm from bottom dead center. The clearance between the rotary hook assembly point and the routing surface of the needle (#14) at this time should be no greater than 0.15 mm on both left and right and the rotary hook assembly point should not touch the needle.

ADJUSTMENT

1. Turn the selection dial, turn the Zigzag dial, to the maximum and set to left straight line sewing.
2. Loosen the three screws securing the lower shaft gear.
3. Align the position of the rotary hook assembly. (Adjust so that the rotary hook assembly point matches the outer edge of the needle when the needle rises 2.75-3.15 mm from bottom dead center.)
4. Tighten the three screws securing the lower shaft gear.
5. Turn the selection dial to select zigzag sewing.
6. Turn the adjustment screw so that the clearance between the rotary hook assembly point and the routing surface of the needle at this time is no greater than 0.15 mm. Check that for both the left and right needle descent positions, the needle does not touch the rotary hook assembly point.

Adjustment Points

If there is a difference in the clearances between the rotary hook assembly point and the routing surface of the needle at the left and right needle descent positions, loosen the needle bar block shaft A set screw and adjust the needle bar block assembly left-right position to eliminate the difference left and right.

∗ If the clearance is larger at the right needle descent position.... Move the needle bar block to the left.

∗ If the clearance is larger at the left needle descent position..... Move the needle bar block to the right.

* If the needle adjustment is inadequate, the following problems may occur.

1. If the clearance is too large, skipped stitches may occur.
2. If the clearance is too small, the needle may generate an irregular noise (scraping metal sound) or the needle may break.
3. If the needle rises too little, skipped stitches, split thread, or cut thread may occur.
4. If the needle rises too much, skipped stitches, split thread, or cut thread may occur due to a loop forming in the thread.

* Before adjusting the needle and rotary hook assembly timing, execute 4. NEEDLE DOWN POSITION ADJUSTMENT, 5.NEEDLE FLOW and 6. LEFT STRAIGHT LINE SEWING NEEDLE DESCENT AND ZIGZAG MAXIMUM LEFT NEEDLE DESCENT.

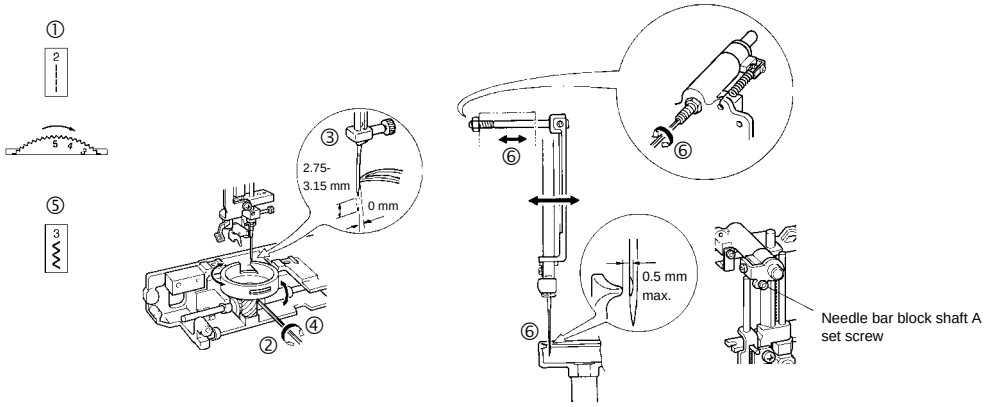

8. NEEDLE BAR HEIGHT

STANDARD

For left straight line sewing, when the needle outer edge and rotary hook assembly point match, the distance from the needle hole top edge to the rotary hook assembly point lower edge should be 0.8-1.2 mm.

ADJUSTMENT

1. Turn the feed dial to maximum.
2. Turn the balance wheel to the position that which the needle outer edge and rotary hook assembly point match.
3. Loosen the screw securing the needle bar holder.
4. Move the needle bar up and down and align within the range 0.8-1.2 mm.
5. Tighten the screw securing the needle bar holder.

Adjustment Points

5. When adjusting the needle bar height, the needle bar is turned easily and this can cause obstructions to sewing. When adjusting, be careful that the front surface of the needle holder.
   After adjusting the needle bar height, check the threading hook vertical position.
   [Adjustment Procedure 29]
   If the needle bar height is too high or too low, skipped stitches, split thread, or cut thread may occur.

* Adjust the needle and rotary hook assembly timing before adjusting the needle bar height.

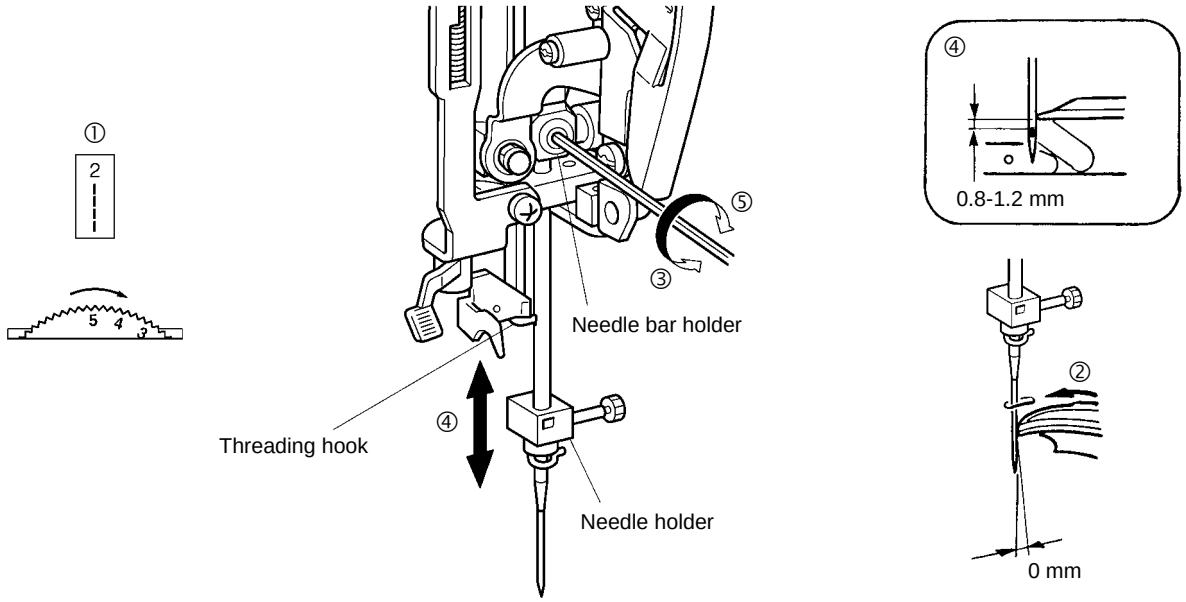

9. INNER ROTARY HOOK RETAINER PLATE L POSITION

STANDARD

The clearance between the inner rotary hook retainer plate L and the rotary hook assembly top surface should be 0.4-0.6 mm.

ADJUSTMENT

1. Loosen the screw securing the inner rotary hook retainer plate L.
2. Adjust the vertical position of the inner rotary hook retainer plate L and adjust so that the clearance between the inner rotary hook presser plate L and the rotary hook assembly top surface is 0.4-0.6 mm.
3. Tighten the screw securing the inner rotary hook retainer plate L.

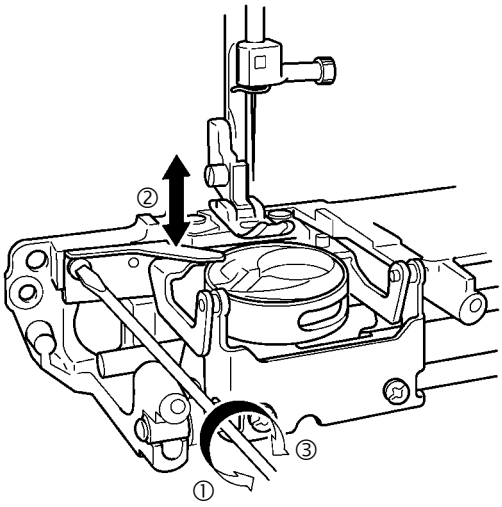

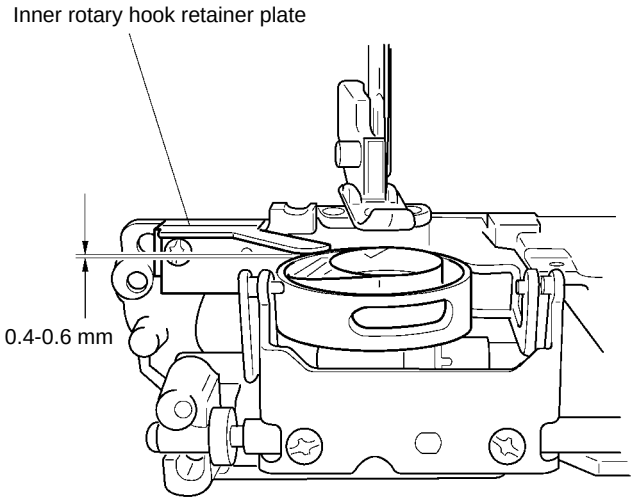

10. INNER ROTARY HOOK ROTATION PREVENTION BRACKET POSITION

STANDARD

The hanging distance for the inner rotary hook rotation prevention bracket spring and the inner rotary hook projection section should be 1.6-1.8 mm.

ADJUSTMENT

1. Loosen the setscrew for the inner rotary hook rotation prevention bracket.
2. Adjust the forward-back position of the inner rotary hook rotation prevention bracket so that the hanging difference for the inner rotary hook rotation prevention bracket spring and inner rotary hook projection section is 1.6-1.8 mm.
   Note: Adjust so that the inner rotary hook A surface is perpendicular to the feed direction.
3. Tighten the screw securing the inner rotary hook rotation prevention bracket.

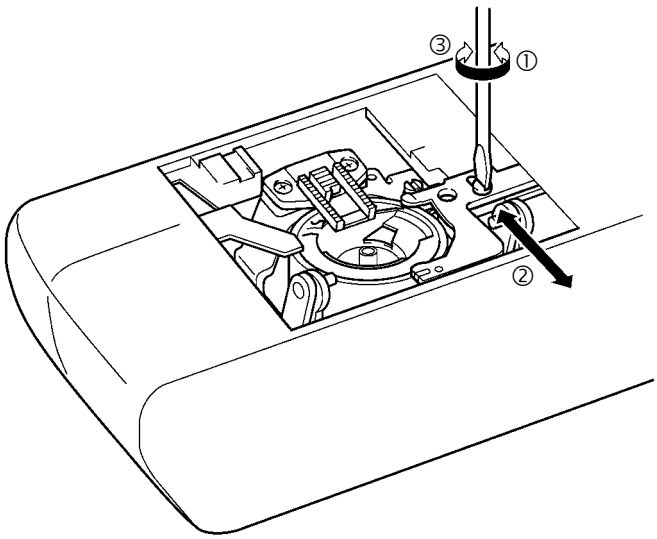

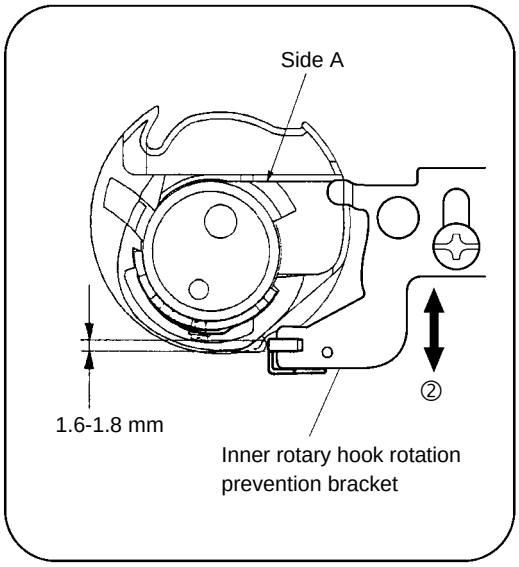

11. FEED DOG FRONT-REAR AND LEFT-RIGHT POSITION

STANDARD

The left-right position should be such that when the upper shaft is rotated one rotation with the maximum feed distance, the feed dog does not touch the needle plate. (The clearance between the needle plate and the feed dog should be at least 0.1 mm.)
The forward-reverse position should be such that there is a clearance of 0.3-0.8 mm between the feed dog and the needle plate at the feed start position (when the feed dog are the most forward) for the maximum feed distance.

ADJUSTMENT

1. Turn the feed dial to maximum.
2. Turn the selection dial to straight line sewing.
3. Loosen the screw securing the horizontal feed plate.
4. Align the feed dog left-right position.
5. Tighten the screw securing the horizontal feed plate.
6. Turn the upper shaft pulley to the feed start position.
7. Loosen the screw securing the horizontal feed arm.
8. Set the clearance between the feed dog and the needle plate to 0.3-0.8 mm.
9. Tighten the screw securing the horizontal feed arm.

Adjustment Points
4. Make the adjustment in (8) with the needle plate installed.

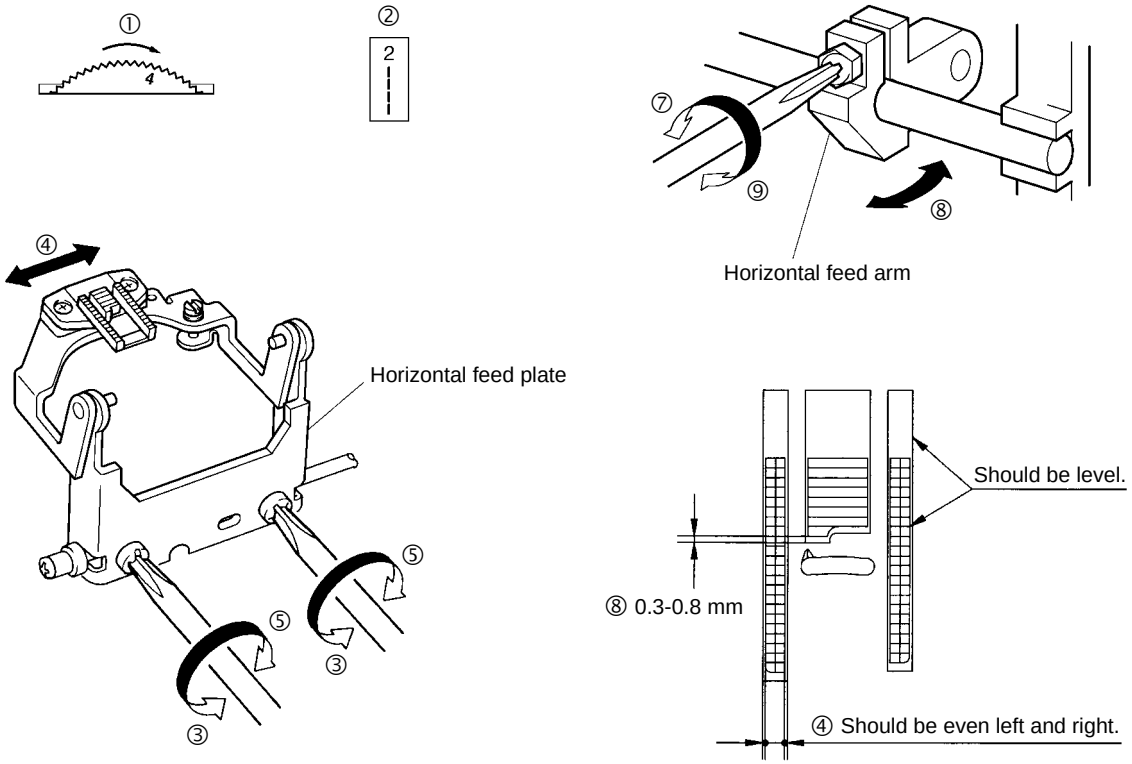

12. FEED DOG HEIGHT

STANDARD

The feed dog standard height is such that when the feed dog are top dead center, the feed dog center section extends 0.9-1.1 mm from the needle plate upper surface.

ADJUSTMENT

1. Turn the balance wheel to move the feed dog to top dead center.
2. Loosen the screw securing the vertical feed finger.
3. Turn the vertical feed finger with a driver and adjust so that the feed dog height is 0.9-1.1 mm at the center of the feed dog.
4. Tighten the screw securing the vertical feed finger.

Adjustment Points

* If the feed dog height is not correctly adjusted, the following problems may occur.

1. If the feed dog is too high, they may touch the rear of the needle plate and make noise, front-rear movement may deteriorate, the feed distance may become inaccurate, and the sewing machine may stop feeding the fabric.
2. If the feed dog is too low, the feed distance may become inaccurate and the sewing machine may stop feeding the fabric.

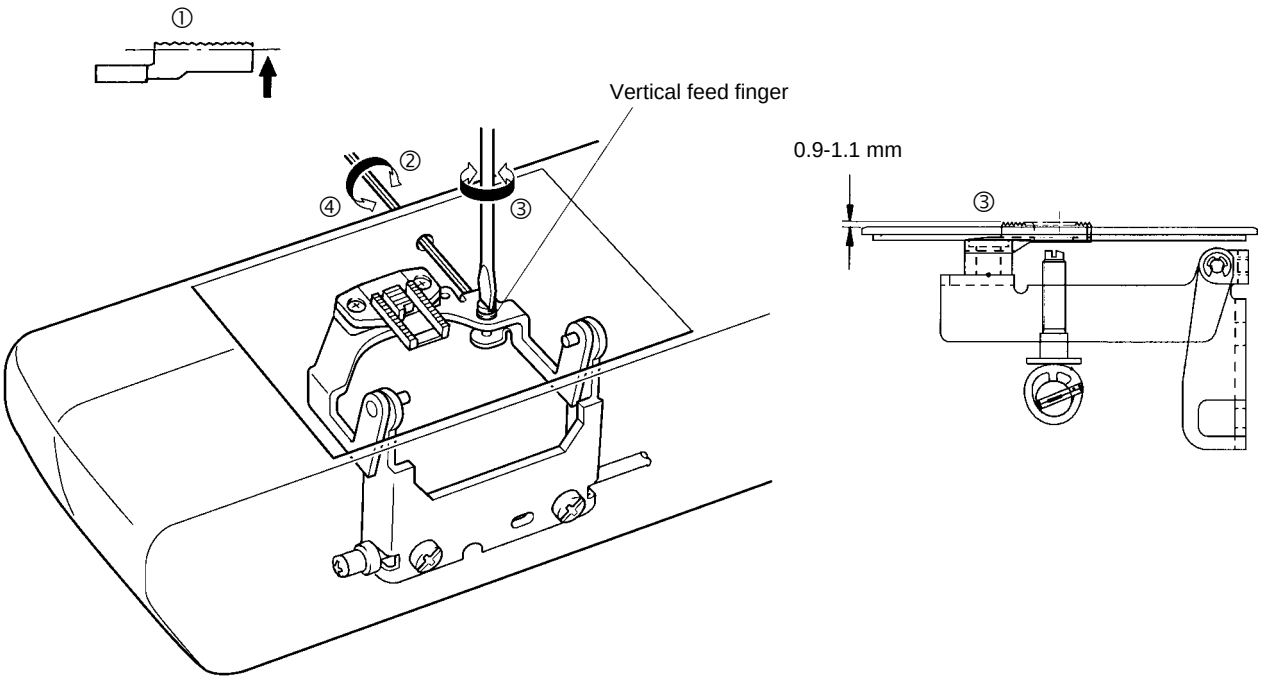

13. PRESSER BAR HEIGHT

STANDARD

The height of the presser bar should be such that when the presser lifter is raised (1st-stage lift state), the distance from the top surface of the needle plate to the bottom surface of the presser foot should be 6.0-6.5 mm.

ADJUSTMENT

1. Raise the presser lifter.
2. Loosen the screw securing the presser bar clamp.
3. Move the presser bar up and down and adjust so that the distance between the top surface of the needle plate and the bottom surface of the presser foot is 6.0-6.5 mm.
4. Tighten the screw securing the presser bar clamp.

Adjustment Point

3. Check that the side surface of the presser foot and the needle plate feed dog groove are parallel. If the presser foot is not parallel, the needle may strike the presser foot or the fabric may not feed straight while overcasting.
   Adjust the presser bar height with the feed dog below the needle plate top surface.

* Install presser foot J.

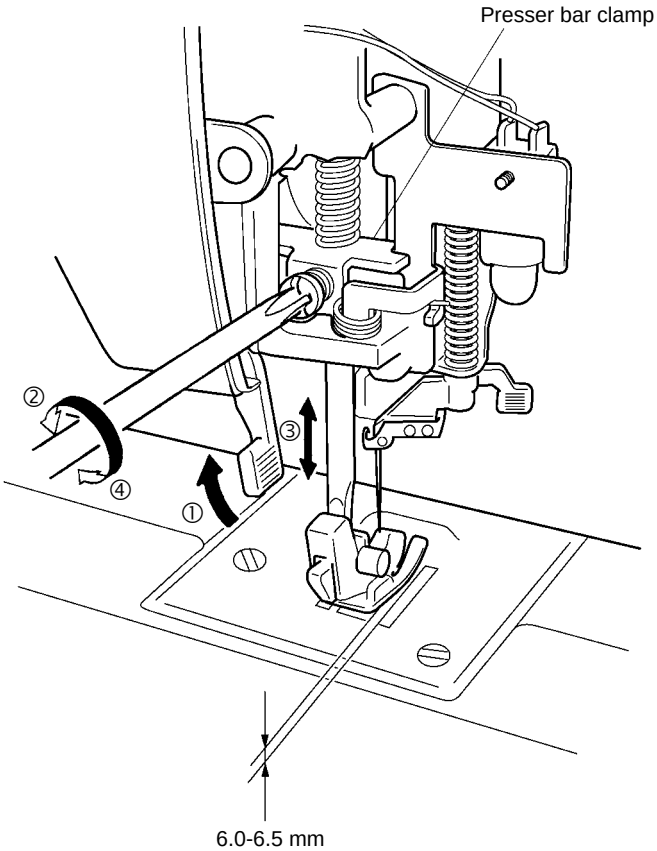

14. THREAD TENSION DIAL TENSION

STANDARD

With the presser foot down and the thread tension dial set to position 4, when polyester thread (#60, green) is pulled slowly down with the tension gauge, the reading should be 0.33-0.38 N (33-38 gf).

ADJUSTMENT

1. Set the thread tension dial position to position 4, put the polyester thread (#60, green) between the plate and the plate, and lower the presser foot.
2. Loosen the screw securing the thread tension nut.
3. Pull the thread slowly with the tension gauge in the direction shown in the figure and adjust by turning the thread tension adjustment screw so that the reading on the tension gauge is 0.33-0.38 N (33-38 g f).
4. Tighten the screw securing the thread tension nut.

Adjustment Point

3. Adjust with the thread just passing the thread tension adjustment plates and not passing the upper thread guide plate. For tension checking, use thread that is as new as possible. (If old thread is used, the tension may not be measured accurately.)

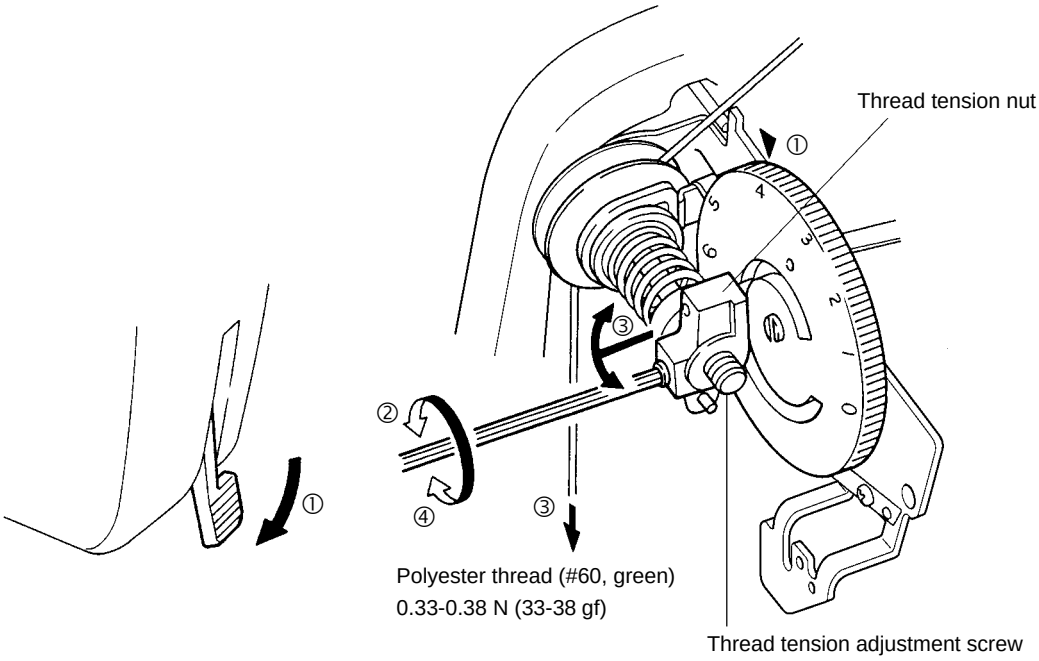

15. SELECTION DIAL OUTER EDGE PLAY

STANDARD

The selection dial outer edge play should be 0.5-2 mm.

ADJUSTMENT

1. Loosen the screw securing the presser plate.
2. Rotate the selection dial bearing to adjust the play.
3. Tighten the screw securing the presser plate.

Adjustment Points
2. Turning the selection dial bearing so that the alignment mark is up reduces play; turning it so that it is down increases play.

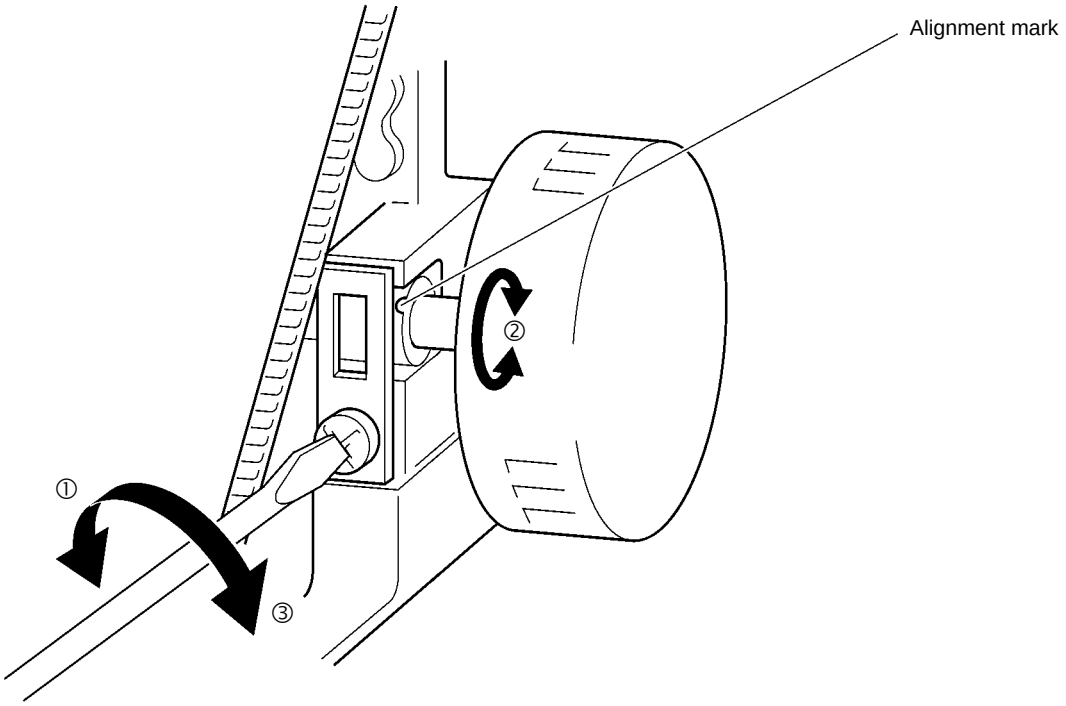

16. PATTERN DISPLAY SELECTION POSITIONING

STANDARD

When the selection dial is selected, the appropriate pattern display should appear in the center of the pattern display window.

ADJUSTMENT

1. Turn the selection dial to BH sewing.
2. Loosen the two screws securing the indication gear.
3. Align the center of the square groove on the indication gear and the center of the unit base F hole.
4. Tighten the two screws securing the indication gear.
5. Install the front cover and check that when the selection dial is turned, the appropriate pattern display comes to the center of the display window on the front cover.

Adjustment Point

* This adjustment is not normally required. After installing the front cover, if the displayed pattern and the sewn pattern match but the front cover pattern display is not at the center of the window (is tilted), adjust.

1. When adjusting the indication gear, be careful that the selection cam does not deviate in the axial direction. Also, after adjusting the indication gear, check the axial position of the selection cam (Z) (position relative to the contact pattern cam). If the selection cam is out of place, adjusted with adjustment procedure 17.

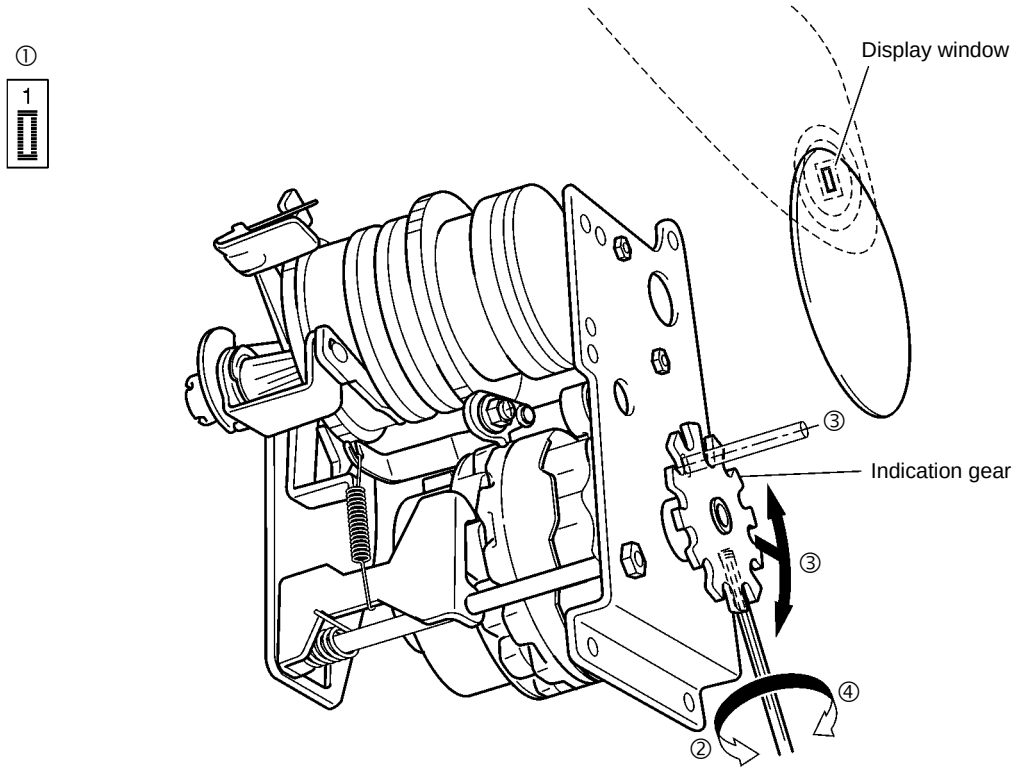

17. Z FINGER POSITIONING

STANDARD

The Z finger should come to the center of the corresponding pattern cams.

ADJUSTMENT

1. Turn the selection dial and check the position of the Z finger relative to the cam.
2. Turn the selection dial to zigzag sewing and loosen the two screws securing the indication gear.
3. Move the selection cam left and right and align the Z finger and the pattern cam center.
4. Tighten the two screws securing the indication gear.
5. Turn the selection dial and check the position of the Z finger relative to the cam.

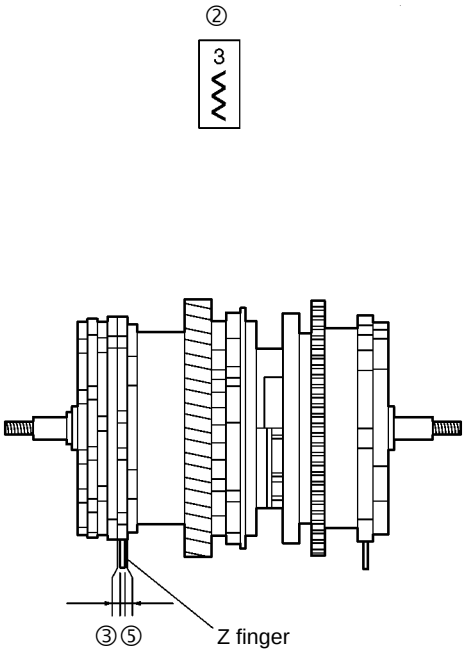

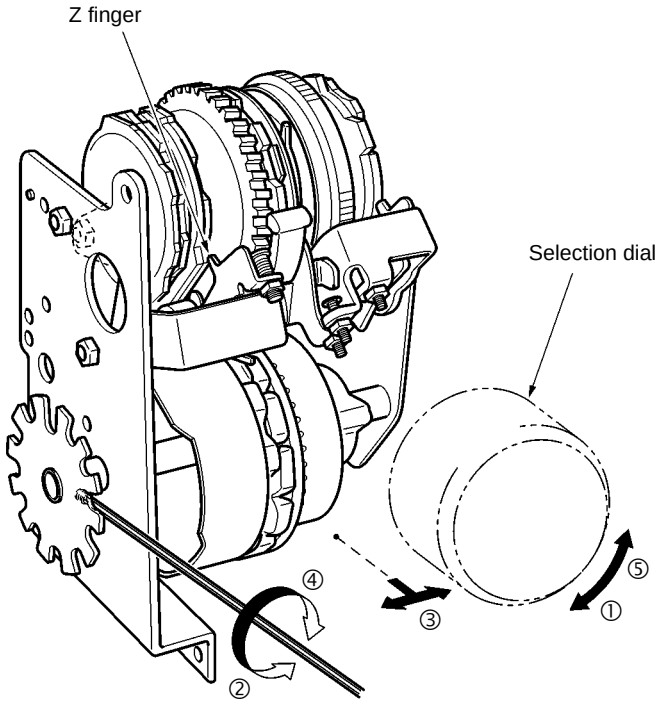

18. FEED BRACKET INSTALLATION POSITION

STANDARD

When the feed dial is set to 0, the feed dial gear and idle gear and feed cam alignment marks should match.

ADJUSTMENT

1. Turn the feed dial to the 0 position.
2. Check that the feed dial gear alignment mark and idle gear alignment mark match.
3. Check that the idle gear alignment mark and feed cam alignment mark match.
4. Install with the two screws.

Assembly Points

Tighten the feed bracket assembly screws in the order (C) (D).

Adjustment Points

2. If the feed dial gear alignment mark and idle gear alignment mark do not match, remove the idle gear lock rating, move the gear meshing to lineup the alignment marks, then reinstall the lock ring.
   Be careful about backlash between the feed dial gear and idle gear and the feed cam.

* If the backlash is too small, the feed dial moves sluggishly.
If the backlash is too large, the intended feed is not achieved.
To adjust the backlash, loosen the screw (A), move the idle gear left and right, then after the adjustment is complete, tighten the screw (A).

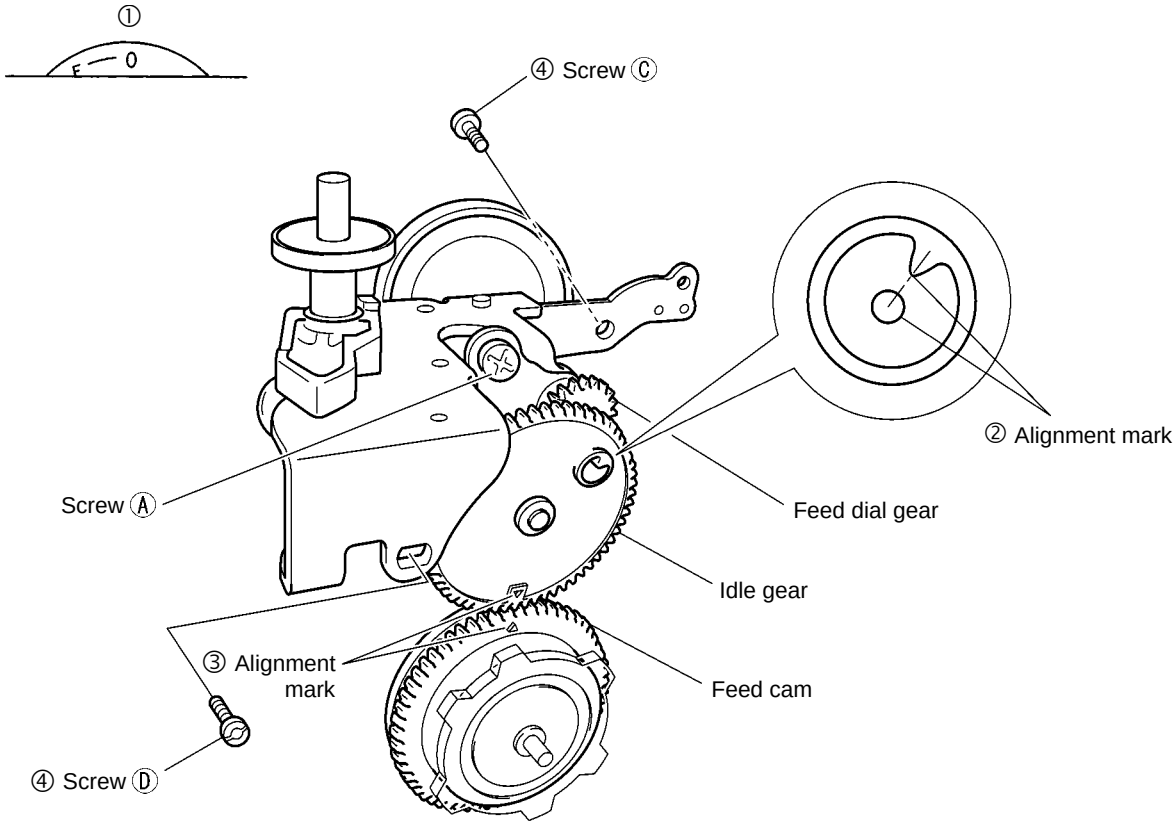

19. SUPER PATTERN (TRIPLE SEWING)

STANDARD

Be particularly careful, the pattern will break down unless the super pattern stitch length forward and reverse lengths are correctly adjusted.

ADJUSTMENT

1. Turn the selection dial to zigzag sewing, turn the Zigzag dial to the maximum, and set the feed dial to SS position.
2. Loosen the feed regulator nut.
3. Turn the adjustment screw to adjust the length of the forward and reverse stitches.
4. Tighten the feed adjuster nut.

Adjustment Points

3. Turning the adjustment screw to the right increases the reverse stitch length; turning it to the left increases the forward stitch length.
4. When fastening the adjustment screw with the nut, in order to maintain the position and prevent deviation, hold the adjustment screw with the driver while you tighten down the nut.

* When adjusting the SUPER PATTERN, check the 20. FEED ADJUSTMENT and 21. BUTTON HOLE STITCH LEFT REVERSE STITCH AND RIGHT FORWARD STITCH LENGTH ADJUSTMENT and adjust them if necessary.

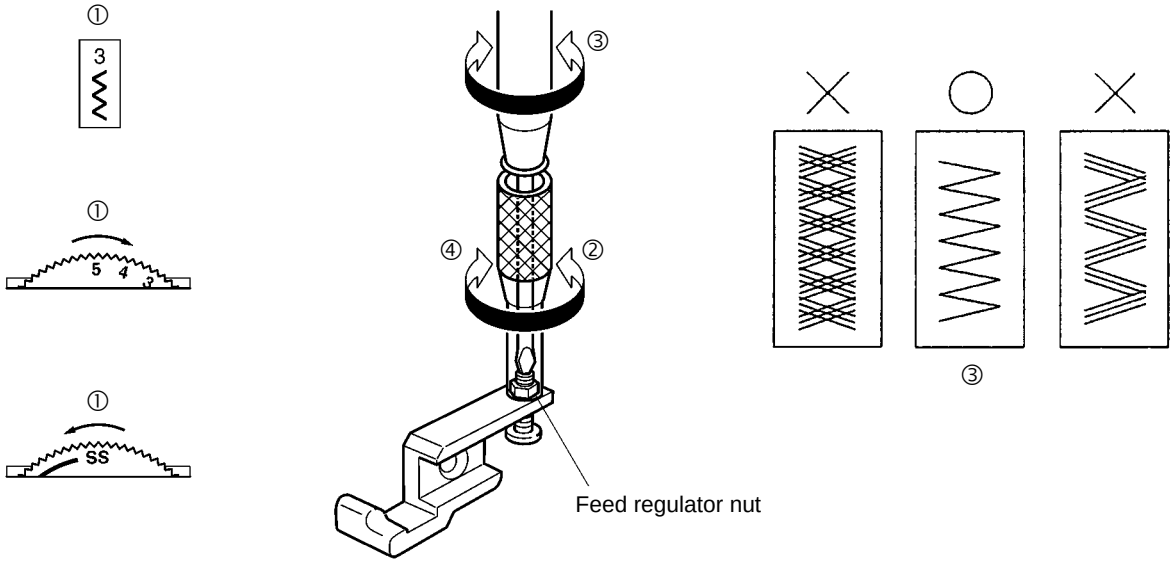

20. FEED ADJUSTMENT

STANDARD

When the feed dial is 2, the feed distance for left straight line sewing should be 1.8-2.2 mm for 10 pitch.

ADJUSTMENT

1. Turn the selection dial to straight line sewing, turn the Zigzag dial to maximum, and set the feed dial to 2.
2. Loosen the adjustment screw nut.
3. Turn the adjustment screw to set the feed distance to 1.8-2.2 mm.
4. Tighten the adjustment screw nut.

Adjustment Points

3. Adjust by moving the feed dial gear position left and right so that when normal paper is laid under the presser foot and the balance wheel is rotated by hand 11 rotations (10 pitch) in the forward direction, the distance that the normal paper is fed is 1.8-2.2 mm.
   If the 19. SUPER PATTERN adjustment is not executed before the FEED ADJUSTMENT, the FEED ADJUSTMENT will need to be executed again after the 19. SUPER PATTERN adjustment.

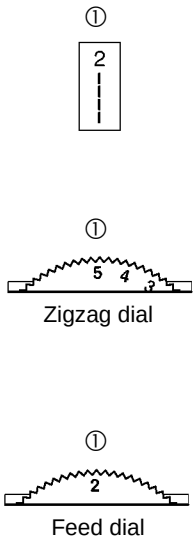

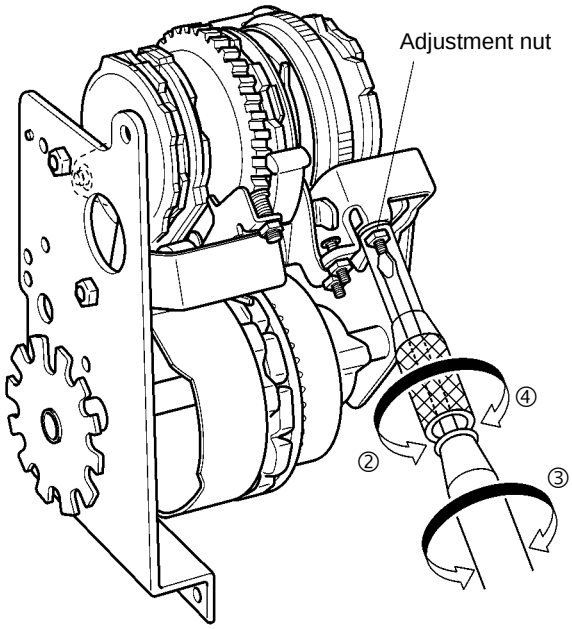

21. BH LEFT NEEDLE DESCENT AND ZIGZAG MAXIMUM LEFT NEEDLE DESCENT ALIGNMENT

STANDARD

The BH left needle descent and zigzag maximum left needle descent should match.

ADJUSTMENT

1. Set the feed dog cover on the needle plate and lay paper under the presser foot.
2. Turn the selection dial to zigzag sewing and turn the Zigzag dial to the maximum.
3. Turn the balance wheel to lower the tip of the needle to the paper with left needle descent.
4. Turn the selection dial to button hole.
5. Turn the balance wheel and lower the tip of the needle to the paper with left needle descent.
6. Loosen the adjustment screw nut.
7. Turn the adjustment screw to adjust the needle descent.
8. Tighten the adjustment nut.

Adjustment Points

7. When you turn the adjustment screw to the right, the needle descent moves to the right side.
8. When fastening the adjustment screw with the nut, in order to maintain the position and prevent deviation, hold the adjustment screw with the screwdriver while you tighten down the nut.

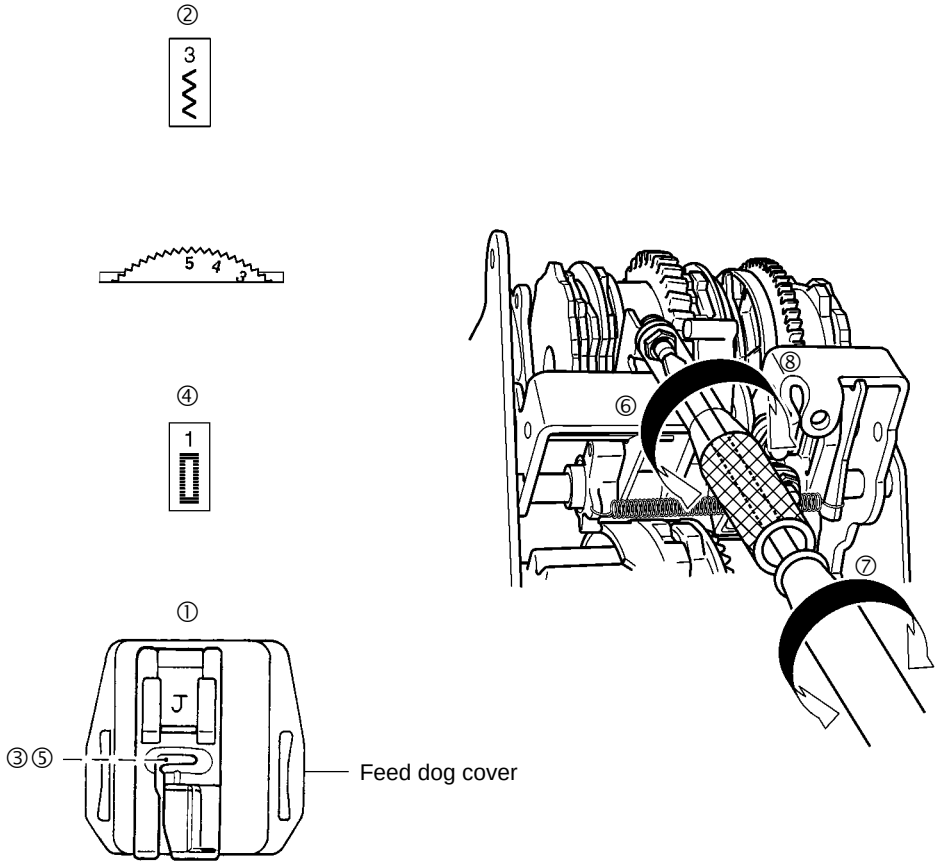

22. BUTTON HOLE STITCH LEFT REVERSE STITCH AND RIGHT FORWARD STITCH LENGTH

STANDARD

When the feed dial is in the F position, the left reverse stitch and right forward stitch length must be the same.

ADJUSTMENT

1. Set the feed dial to F position.
2. Check the difference between the left reverse stitch and right forward stitch length.
3. Loosen the BHF adjustment screw nut.
4. Turn the BHF adjustment screw so that the difference between the left reverse stitches and right forward stitches does not stand out.
5. Tighten the BHF adjustment screw nut.

Adjustment Points

3. When adjusting using a box driver as shown in the figure, since the selection dial interferes slightly with the box driver, remove the selection dial screw and the selection dial beforehand.
4. Turning the adjustment screw to the left makes the left reverse stitches finer; turning it to the right makes them larger. Also, check that the alignment mark for the BH fine adjustment knob is facing straight up.
5. When fastening the adjustment screw with the nut, in order to maintain the position and prevent deviation, hold the adjustment screw with the screwdriver while you tighten down the nut.

* Note that unless the 19. SUPER PATTERN is completed before the BH left reverse stitch and right reverse stitch length adjustment, the BH left reverse stitch and right reverse stitch length adjustment will need to be repeated.

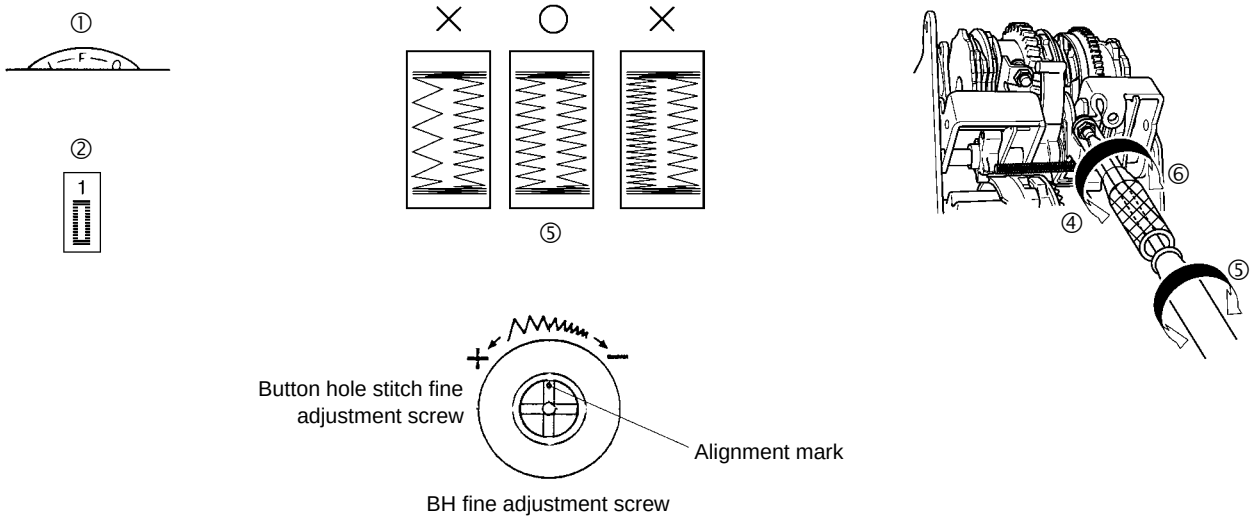

23. BUTTON HOLE STITCH BAR TACK FEED ADJUSTMENT

STANDARD

The button hole stitch bar tack feed distance should be no greater than 1 mm for 10 pitch.

ADJUSTMENT

1. Turn the selection dial to BH sewing and execute bar tack sewing.
2. Loosen the bar tack adjustment screw nut.
3. Adjust by turning the bar tack adjustment screw.
4. Tighten the bar tack adjustment screw nut.

Adjustment Points

2. When adjusting using a box driver as shown in the figure, since the selection dial interferes slightly with the box driver, remove the selection dial screw and the selection dial beforehand.
3. To forward the bar tack, turn the adjustment screw to the left. To reverse the bar tack, turn the adjustment screw to the right.
4. When fastening the adjustment screw with the nut, in order to maintain the position and prevent deviation, hold the adjustment screw with the screwdriver while you tighten down the nut.

* Note that unless the 22. BUTTON HOLE STITCH LEFT REVERSE STITCH AND RIGHT FORWARD STITCH LENGTH is completed before the button hole stitch bar tack sewing feed adjustment, the button hole stitch bar tack sewing feed adjustment will need to be repeated.

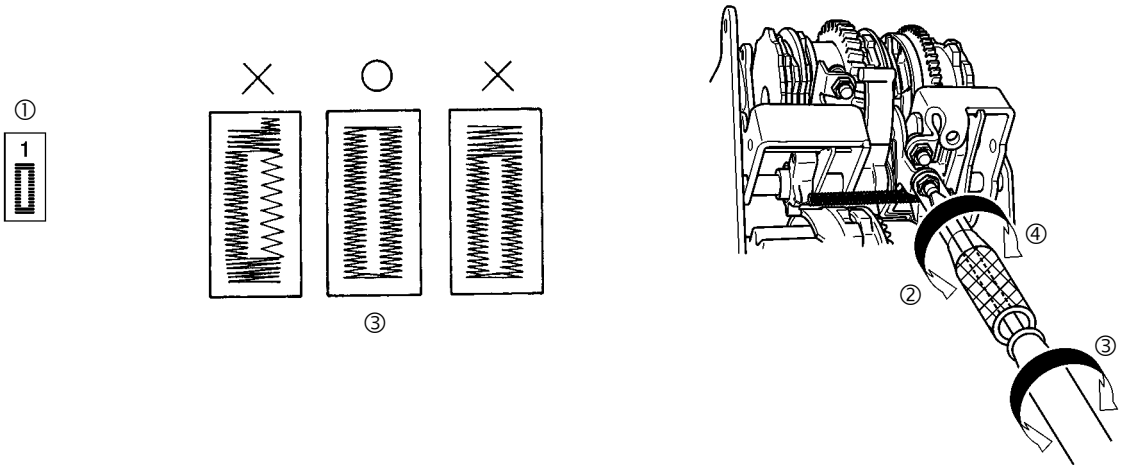

24. BUTTON HOLE STITCH BUTTON HOLE LENGTH

STANDARD

When a button hole is sewn using a 20 mm button, the button hole length should be sewn 21-23 mm. The BH operation should be 0.5-1.1 N (50-110 gf) on the return side.

ADJUSTMENT

1. Loosen the BH change arm set screw.
2. Adjust according to the arrow mark 2 on the BH lever.
3. Tighten the BH change arm set screw.
4. Loosen the screw securing the eccentric nut.
5. Turn the eccentric nut and align with 0.5-1.1 N (50-110 gf) on the BH lever return side. (The adjustment should be made within 1/2 rotation of the eccentric nut.)
6. Tighten the screw securing the eccentric nut.
   * Adjust the BH lever changing timing with the BH notch adjustment screw.

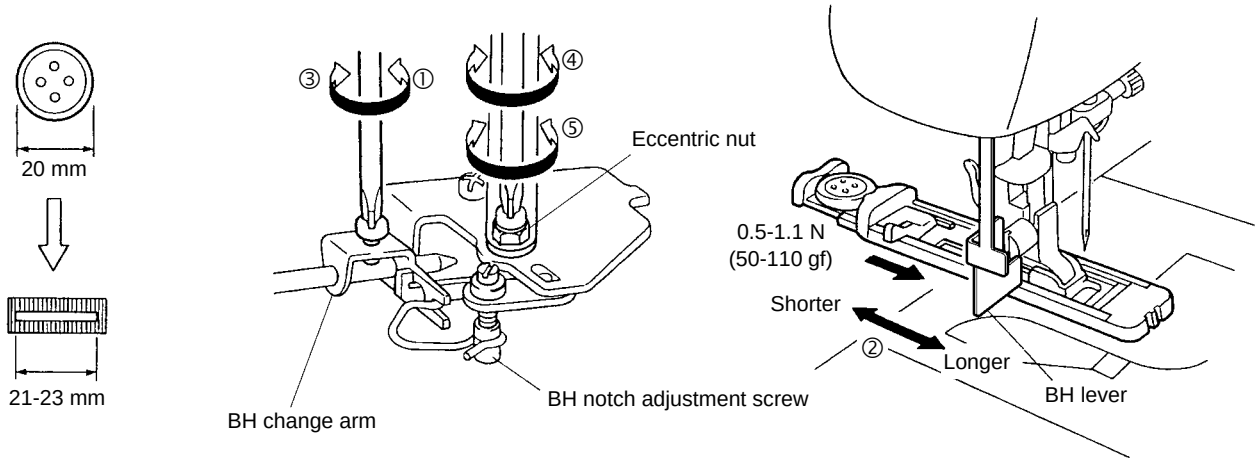

25. THREAD WINDING ADJUSTMENT

STANDARD

The thread should be wound parallel to the bobbin and 75-85 percent of the outer diameter of the bobbin.

ADJUSTMENT

1. Wind the thread and check the status of the thread wound onto the bobbin.
2. Slightly loosen the screw securing the lower thread winding thread guide.
3. Move the lower thread winding thread guide up and down to adjust the bobbin winding.
4. Tighten the screw securing the lower thread winding thread guide.
5. Loosen the screw securing the bobbin presser by turning it back two-three rotations.
6. Rotate the bobbin presser and adjust the thread winding amount.
7. Tighten the screw securing the bobbin presser.
8. Again wind thread and check the status of the thread wound onto the bobbin.

Adjustment Points

1. 8. Wind to the thread onto the bobbin with the bobbin set correctly on the thread winding shaft. (The bobbin groove and the thread winding shaft spring position should be aligned.)
2. If the thread winding thread guide screw is loosened too much, the nut will fall into the sewing machine, so be careful not to loosen this screw too much.
3. When adjusting the bobbin winding, for the case shown in (B) lower the lower thread winding thread guide; for the case shown in (C) raise the lower thread winding thread guide.
4. If the screw securing the thread winding thread guide is tightened excessively, the rib supporting the nut may be broken, so be careful not to tighten this screw excessively. (Tightening torque 0.4-0.6 Nm (4-6 kgf-cm))
5. If the screw securing the bobbin presser is loosened too much, the nut will fall into the sewing machine, so be careful not to loosen this screw too much.
7. If the screw securing the bobbin presser is tightened excessively, the rib supporting the nut may be broken, so be careful not to tighten this screw excessively. (Tightening torque 0.4-0.6 Nm (4-6 kgf-cm))

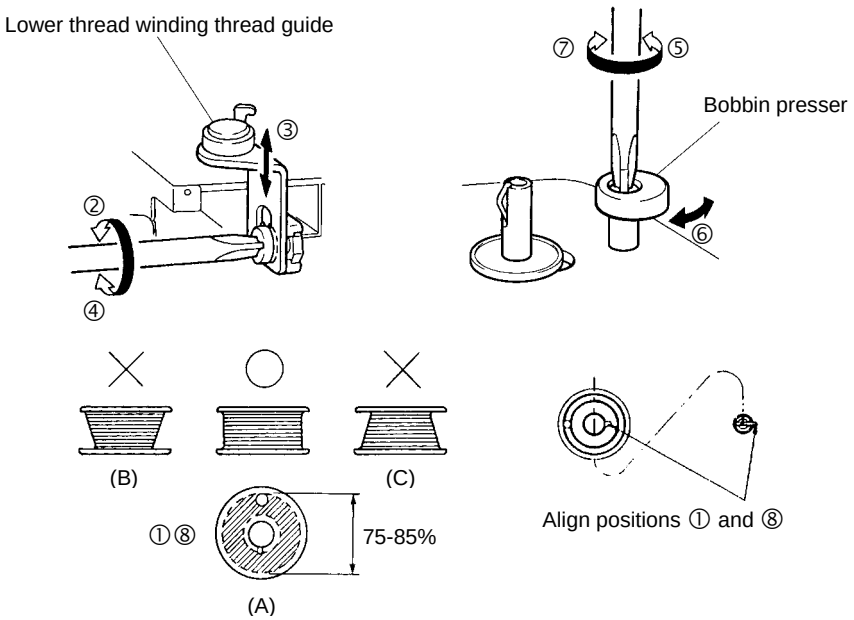

26. FORWARD AND REVERSE STITCH LENGTH (STRAIGHT LINE STITCH LENGTH)

STANDARD

When the feed dial is to set to 2, there should be no difference between the stitch length for forward and reverse.

ADJUSTMENT

1. Turn the selection dial and the Zigzag dial to medium straight line sewing.
2. Set the feed dial to 2.
3. Lay normal paper under the presser foot, turn the balance wheel, sew in the forward direction, and check the stitch length then, at another position, while pressing the reverse sewing button, turn the balance wheel, sew in the reverse direction, and compare the reverse stitch length with the forward stitch length.
4. Adjust the reverse sewing lever A adjustment screw to match the lengths for forward stitches and reverse stitches.

Adjustment Point
4. Turning the adjustment screw to the right increases the length for reverse stitches.

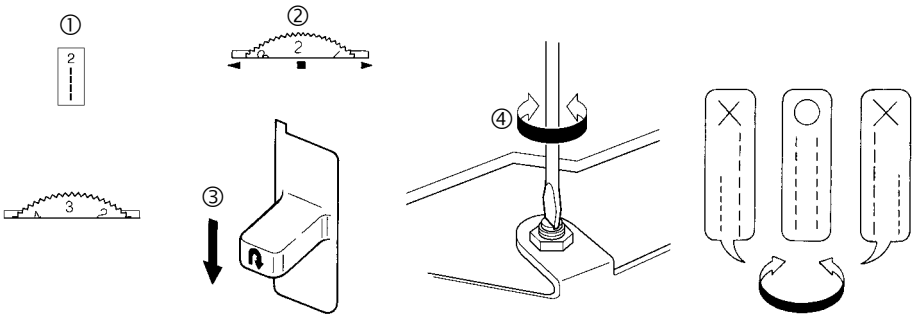

27. INNER ROTARY HOOK TENSION

STANDARD

The inner rotary hook tension should be 0.1 N - 0.12 N (10-12 gf) when #60 polyester thread is pulled slowly with the tension gauge.

ADJUSTMENT

1. Correctly mount a bobbin with polyester thread (#60, green) on the inner rotary hook, then check the tension by pulling the thread slowly with the tension gauge in the direction shown on the figure.
2. Turn the spring adjustment screw left and right with the driver to adjust to the inner rotary hook tension.
3. Check the inner rotary hook tension again with the method in 1.
4. After the adjustment, paint the adjustment screw with oil-based paint so that the inner rotary hook tension will not change.

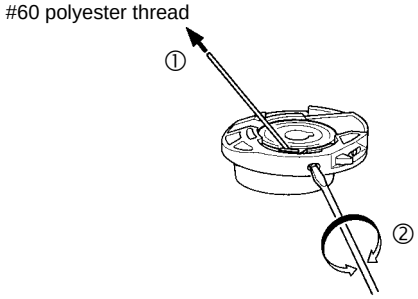

28. NEEDLE THREADER

USING THE NEEDLE THREADER

There are a wide variety of different needles and sewing machine threads available. The right ones should be selected in accordance with the sewing conditions. The accessory needle threader is designed to make threading of needles easier, but it cannot handle every single usage circumstance (combination of needle and thread that might occur. It can be used with some combinations but not with others and even with combinations with which it can be used, the pattern may not be sewn correctly under certain sewing conditions. Do not use the needle threader without a thorough understanding of how to use it correctly.
Otherwise, the needle threader may be damaged or needle threading may not be possible.
Be sure to read and understand the following so that you can handle customer complaints.

NOTES :

1. The needle threader accepts only the circled needle and thread combinations.
2. Combinations marked with * can be used, but are not recommended since they might lead to the break each of needle threader performance.
3. Lower the presser foot when you use the needle threader.
4. When using nylon transparent thread, always use in the range machine needle #14-16, regardless of the table below.
5. Do not turn the balance wheel when using the needle threader.
6. Do not lower the needle threader lever while the machine is running. If you do so, the needle threader may be broken, rendering it unusable. In addition, doing so might cause the needle to break and result in injury.
7. If a #9 needle is used, the variation in needle precision may result in the needle being slightly difficult to thread.
8. If the needle threader is used with the bottom surface of the needle holder and the bottom surface of the hook holder not aligned, needle threading may be impossible.

Thread / Needle	#30	#50	#60	#80	#100	#120
#9	×	×	×	O	O	O
#11	×	O	O	O	O	*
#14	×	O	O	O	*	*
#16	*	O	O	*	*	*
#18	*	*	*	*	*	*

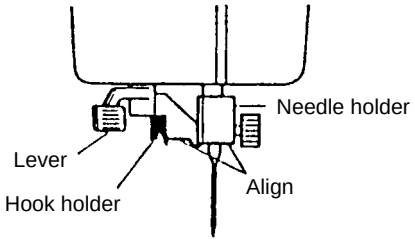

29. NEEDLE THREADER (CHECKING THE HOOK POSITION IN THE HORIZONTAL DIRECTION)

STANDARD

Needle threading should be possible when the needle holder bottom surface and hook holder bottom surface height have been aligned.

* Left-right direction relative to the needle hole

The hook left-right direction reference position should be at the needle hole center. (The clearance between the hook and the left and right of the needle hole should be the same.)

* Up-down direction relative to the needle hole

The clearance between the hook and top end of the needle hole should be 0-0.1 mm.

ADJUSTMENT

1. Turn the balance wheel and adjust to the needle holder bottom surface and hook holder bottom surface height. (Use eight #11 or #14 needle.)
2. Loosen the two screws securing the needle threader base.
3. Move the needle threader base left and right and adjust so that the hook comes to the center of the needle hole, then tighten the two screws securing the needle threader base.
4. Loosen the screw securing the positioning support.
5. Adjust the positioning support up and down so that the clearance between the hook and the top end of the needle hole is 0-0.1 mm.
6. Check that the threader positioning and needle bar base are parallel, then tighten the screw securing the positioning support.

* If the threader positioning and needle bar base are not parallel, the threader positioning can contact of the needle bar base and break the threader.

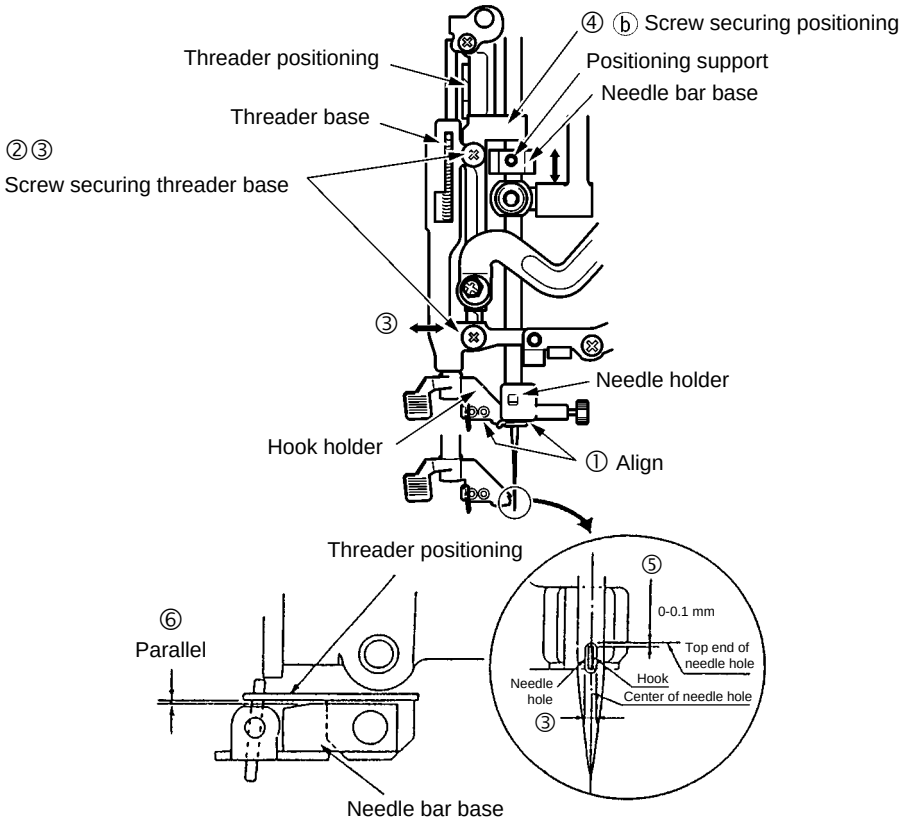

30. NEEDLE THREADER (EXCHANGE)

HOW TO REPLACE NEEDLE THREADER

1. Removes the two screws securing the hook.
2. Install the new hook, then tighten the two screws securing the hook.
3. If the threader hook does not enter the needle hole correctly, adjust the threader. (29. NEEDLE THREADER)

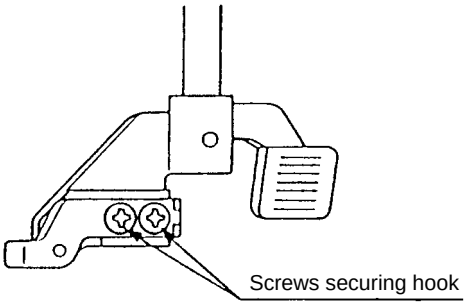

IV. TROUBLESHOOTING PROCEDURES

1. Machine skips stitches 59
2. Fabric does not feed 59
3. Fabric does not feed straight 59
4. Upper thread breaks at start 59
5. Upper thread breaks during sewing 59
6. Upper thread breaks during reverse sewing 59
7. Lower thread breaks 59
8. Needle breaks 60
9. Noise 60
10. Forward and reverse feedings differ 60
11. Improper length of buttonhole legs 60
12. Improper buttonhole size against button size 60
13. Unbalanced patterns 60
14. Needle hits needle plate when pattern selector dial is turned 60
15. Fabric gathers 60
16. The stitch shown in the pattern indication window is different from the one being sewn 61
17. Light is off 61
18. Motor does not run 61

PROBLEM	CAUSE	CORRECTION
1. Machine skips stitches.	1. Improper setting of the needle. 2. Bent or blunt needle. 3. Improper threading. 4. Improper combination of needle/ thread/fabric. 5. Stretch fabric is used. 6. Improper timing of the needle and rotary hook. 7. Improper height of the needle bar. 8. Improper clearance between the needle and rotary hook.	1. Set the needle correctly. 2. Change the needle. 3. Reset threading correctly. 4. Select correct combination of needle/ thread/fabric. 5. Use stretch fabric needle. 6. Refer to P.35. 7. Refer to P.36. 8. Refer to P.35.
2. Fabric does not feed.	1. Stitch length is set at "0". 2. Improper height of feed dog. 3. Thick fabric. 4. Feed dog is worn out. 5. The feed dog is lowered.	1. Set proper stitch length. 2. Refer to P.40. 3. Change the fabric. 4. Change the feed dog. 5. Raise the feed dog with the drop lever.
3. Fabric does not feed straight.	1. Uneven pressure on right/left side of presser foot.	1. Change the presser foot and the feed dog.
4. Upper thread breaks at start.	1. Improper threading.	1. Thread correctly.
5. Upper thread breaks during sewing.	1. Bent or blunt needle. 2. Improper setting of needle. 3. Thread tension is too tight. 4. Thread is tangled. 5. Inferior needle eye. 6. Inferior needle slot of needle plate. 7. Inferior upper thread path. 8. Inferior thread. 9. Needle hits needle plate or rotary hook. 10. There are scratches on inner rotary hook.	1. Change the needle. 2. Set the needle correctly. 3. Adjust tension control dial correctly. 4. Thread correctly. 5. Change the needle. 6. Change the needle plate. 7. Clean or replace. 8. Check or change the thread. 9. Set the needle bar and rotary hook correctly. * Refer to P.35. 10. Change inner rotary hook.
6. Upper thread breaks during reverse sewing.	1. Fabric is pulled excessively. 2. Improper use of reverse sewing button.	1. Guide the fabric. 2. Push reverse sewing button as far as it will allow.
7. Lower thread breaks.	1. Lower thread tension is too tight. 2. Too much thread is wound on bobbin. 3. Thread is tangled. 4. Bobbin does not turn in inner rotary hook. 5. Inferior thread.	1. Adjust the tension by loosening the tension spring screw on inner rotary hook. 2. Change to other bobbin or adjust bobbin winder. 3. Thread correctly. 4. Change the bobbin. 5. Check or change the thread.

PROBLEM	CAUSE	CORRECTION
8. Needle breaks.	1. Touch pattern dial while needle is in the fabric. 2. Needle hits inner rotary hook. 3. Needle hits needle plate. 4. Bent or blunt needle. 5. Improper clearance between the needle and the rotary hook. 6. Machine feeds while needle is in the fabric. 7. Needle flows. 8. Fabric is pulled excessively.	1. Operate machine correctly. 2. Adjust the position of inner rotary hook stopper. * Refer to P.38. 3. Make sure the correct needle is used. * Refer to P.32, P.34. 4. Change needle. 5. Refer to P.35. 6. Refer to P.30. 7. Refer to P.33. 8. Guide the fabric.
9. Noise.	1. Play of worm/pattern cam gear. 2. Play of lower shaft. 3. Play of upper shaft. 4. Noise from rotary hook.	1. Adjust to proper gearing. 2. Adjust play of the lower shaft. 3. Adjust play of the upper shaft. 4. Clean the race of inner rotary hook and outer rotary hook or replace inner rotary hook.
10. Forward and reverse feedings differ.	1. Improper adjustment of reverse sewing lever.	1. Refer to P.54.
11. Improper length of buttonhole legs.	1. Improper adjustment.	1. Adjust screw. * Refer to P.51.
12. Improper buttonhole size against button size.	1. Improper adjustment of buttonhole length.	1. Adjust the length of buttonhole. * Refer to P.52.
13. Unbalanced patterns.	1. Stitch length dial is not set at ''SS''. 2. Feed dog is worn out. 3. Improper height of feed dog. 4. Improper attachment of feed dog. 5. Forward and reverse feedings differ. 6. Stitch width dial is not set to "5".	1. Operate machine correctly. 2. Change the feed dog. * Refer to P.39, P.40. 3. Refer to P.40. 4. Attach the feed dog correctly. 5. Refer to P.47. 6. Operate machine correctly.
14. Needle hits needle plate when pattern selector dial is turned.	1. Release volume is too big.	1. Adjust the release volume. * Refer to P.34.
15. Fabric gathers.	1. Thread tension is too tight. 2. Blunt needle. 3. Improper combination of needle/ thread/fabric. 4. Improper threading.	1. Reduce the tension. 2. Change the needle. 3. Select correct combination of needle/ thread/fabric. 4. Reset threading correctly.

PROBLEM	CAUSE	CORRECTION
16. The stitch shown in the pattern indication window is different from the one being sewn.	1. Release volume is too small. 2. The indicate gear and pattern indicator plate are not aligned correctly.	1. Adjust the release volume. * Refer to P.34. 2. Adjust the pattern indicator. * Refer to P.44.
17. Light is off.	1. Inferior light bulb.	1. Replace the light bulb.
18. Motor does not run.	1. Inferior foot controller. 2. Inferior motor or inferior brush.	1. Replace the foot controller. 2. Replace the motor.

* Be sure to turn off the power.

XL-6562
XL-6452
XR-46
H1040193