PARTS CATALOGUE FOR COMPUTERIZED SEWING MACHINE

ULT2001
ULT2001N
ULT2001C
M3000
M3000N
M3000C

3. 2003.

CONTENTS

(1) PRINCIPAL PARTS 2

(2) UPPER SHAFT / NEEDLE BAR / THREAD TENSION / PRESSER AND ZIGZAG MECHANISM 4

(3) HORIZONTAL FEED / FEED ADJUSTMENT AND SIDE FEED MECHANISM 8

(4) THREAD CUTTING / ROTARY HOOK DRIVE / ROTARY HOOK / BOBBIN WINDER AND THREAD GUIDE MECHANISM 10

(5) LAMP MECHANISM / ELECTRONIC PARTS / MOTOR UNIT..... 14

(6) EMBROIDERY UNIT 16

(7) ATTACHMENTS, PRINTED MATTER, PACKING MATERIALS 18

(1) PRINCIPAL PARTS

No.	CODE	NAME	REMARKS
1	XA9369002	REAR COVER	
2	XA9370051	SPOOL STAND BAR	
3	XA9371051	SHAFT	
4	XA9372151	PRESSER PLATE	
5	XA9373051	KNOCH PLATE	
6	060300416	SCREW, BIND M3X4	
7	136681001	TAPTITE, BIND B M3X8	
8	087411416	TAPTITE, CUP B M4X14	
9	XA9374001	HANDLE	
10	XA9375051	HANDLE HOLDER	
11	XA9379051	HANDLE HOLDER R ASSY	
12	048040346	RETAINING RING, E4	
13	XA9861002	FACE PLATE	
14	X51895051	FACE PLATE BUSH	
15	X80321001	NT LOWER THREAD CUTTER	
16	138384001	RETAINING RING,CS5	
17	XA1800103	NEEDLE THREAD LEVER KNOB	
18	XA5824151	NEEDLE THREADE LEVER	
19	XA5825001	NEEDLE THREAD LEVER SHAFT	
20	138260001	THREAD THROUGH LEVER SPRING	
21	XC0508000	RUBBER WASHER	
22	XA6320000	SHAFT PRESSER PLATE	
23	513159001	WASHER	
24	085301017	TAPTITE, BIND P M3X10	
25	052401406	SCREW PAN (S/P WASHER) M4X14	
26	XA9383001	FREE ARM COVER	
27	0A6400806	SCREW	
28	XA9385251	BASE PLATE	
29	XA9386051	BASE PLATE RUBBER	
30	XA9387050	BASE PLATE RUBBER	
31	XA4687051	REGULATOR ADJUSTING SCREW ASSY	
32	XA9887101	KNEE LIFTER ASSEMBLY	
33	060400616	SCREW, BIND M4X6	
34	XA6215101	SPRING,PLATE	
35	060260316	SCREW, BIND M2.6X3	
36	XA9641001	ASSY,MAIN BODY LEAD WIRE	
37	048030346	RETAINING RING, E3	
38	XA9773051	CONNECTOR HOLDER ASSY	
39	XA9388001	BASE PLATE COVER	
40	060400616	SCREW, BIND M4X6	
41	X57908051	TAPTITE,BIND S M4X10	
42	XA9862002	FRONT COVER	
43	XA9863001	SV KEY TOP	
44	XA9391001	SV JOINT PLATE	

No.	CODE	NAME	REMARKS
45	XA9864002	SS BUTTON (; ULT2001, ULT2001N)	
	XA9864001	SS BUTTON (; ULT2001C)	
		SS BUTTON (; S.G.3000, S.G.300N, S.G.300C)	
46	XA9865001	REVERSE BUTTON	
47	XA9866001	NP BUTTON	
48	XA9867001	THREAD CUTTING BUTTON	
49	XA9868001	BOBBIN WINDER BUTTON	
50	XA1786053	SPOOL PIN	
51	XA9397051	SPOOL PIN HOLDER ASSY	
52	XA9310051	CONNECT COVER	040163
53	146200001	RETAINING RING, CS4	
54	XA9947101	CARD PCD BOARDHOLDER	
55	XA9869001	TP-LCD HOLDER	
56	XA9404001	TOUCH PANEL:EMU601A2B040	
57	XA9405001	LCDM:LM8M64	
58	XA9636001	PCB LINKAGE FOR LCD AND CARD	
59	085200615	SCREW, BIND 2X6	
60	136681001	TAPTITE, BIND B M3X8	
61	U12017001	SCREW, PAN (T WASHER) M3X6	
62	087412016	TAPTITE, CUP B M4X20	
63	XA9407003	ACCESSORY TABLE FRONT COVER	
64	XA9408001	ACCESSORY TABLE REAR COVER	
65	XA9409001	ACCESSORY TABLE	
66	138644051	NOTCHED SPRING	
67	XA9870102	UPPER COVER (; ULT*)	
	XA9870103	UPPER COVER (; S.G.*)	
68	XA9411051	UPPER COVER HOLDER (; ULT2001, ULT2001N, S.G.3000, S.G.3000N)	
	XC3179001	UPPER COVER HOLDER (; ULT2001C, S.G.3000C)	
69	XC3180001	UPPER COVER HINGE (; ULT2001C, S.G.3000C)	
70	XA9785001	HARDCASE ASSY	
71	129074000	FELT	
72	125440000	CASE FELT	
73	XA6039001	FRONT COVER SPACER B	
74	XA3028052	DECORATION PLATE	
75	XC0013001	DECORATION BADGE FOR ULT2001	
	XC0014001	DECORATION BADGE FOR S.G.3000	
	See Last Page	Including #55, 56, 57, 58, 59, 73, 75	
	X81299103	LCD MODULE ASSY (;ULT*)	
	X81299104	LCD MODULE ASSY (;S.G.*)	

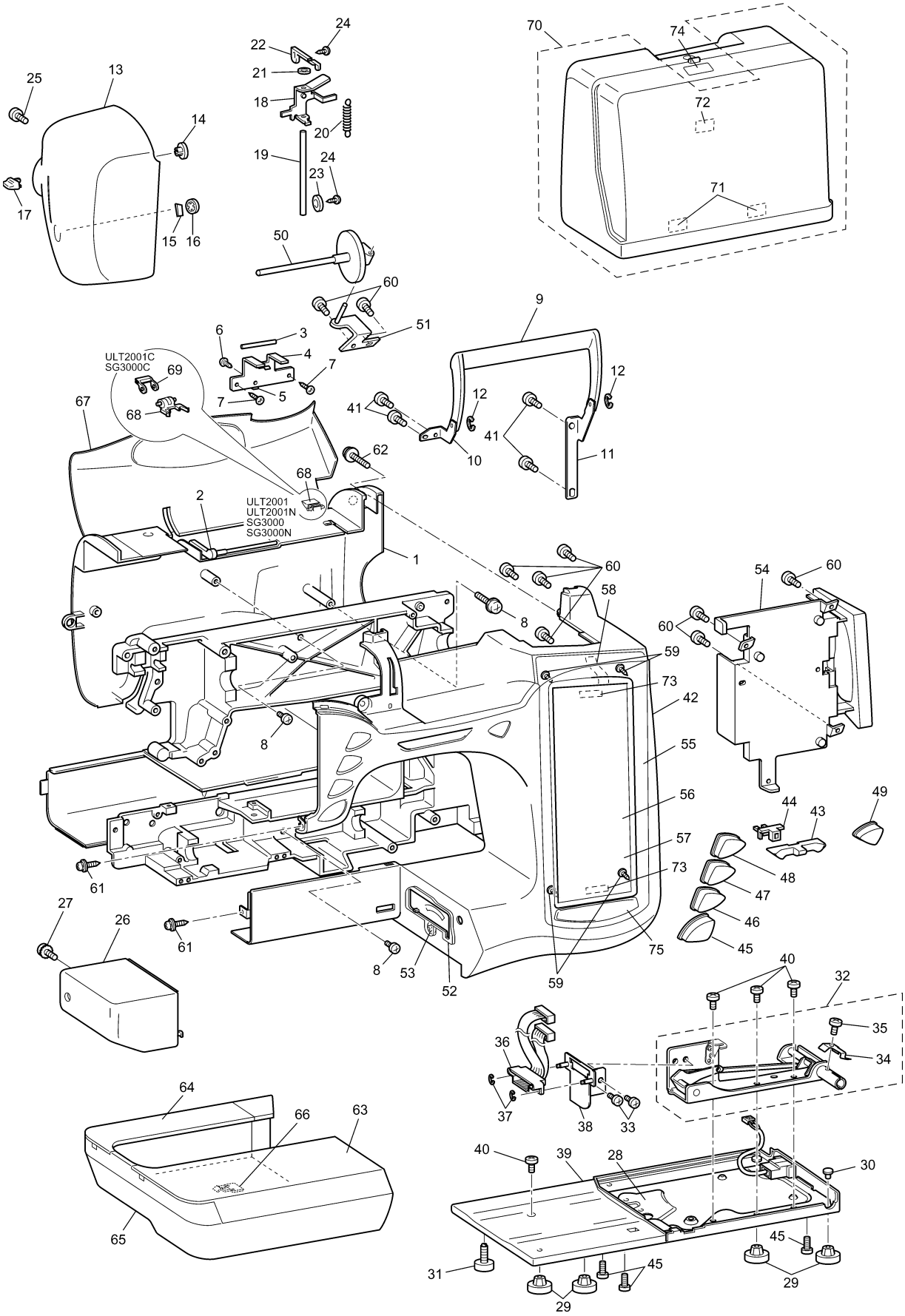
ULT2001C
SG3000C
ULT2001
ULT2001N
SG3000
SG3000N

(2) UPPER SHAFT / NEEDLE BAR / THREAD TENSION / PRESSER AND ZIGZAG MECHANISM

No.	CODE	NAME	REMARKS
		UPPER SHAFT MECHANISM	
1	XA9416001	UPPER SHAFT COMPLETE	
2	XA9418001	PULLEY	
3	X52478001	BUSHING PRESSER	
4	X57908051	TAPTITE,BIND S M4X10	
5	X53125001	T BELT 176XL031	
6	XA9425151	TENSION PULLEY ASSEMBLY	
7	0A5401005	SCREW, PAN (S/P WASHER) M4X10	
8	XA9427001	ASSY, NP PCB	
9	138433001	TAPTITE,PAN B M3X6	
10	XA9430151	PC BOARD HOLDER	
11	060400816	SCREW, BIND M4X8	
12	XC3183001	FELT (; ULT2001C, S.G.3000C)	
		NEEDLE BAR MECHANISM	
13	XA5832151	NEEDLE BAR SUPPORT ASSY	
14	XC4100051	NEEDLE THREAD SHAFT A ASSY	
15	131281001	PIN, DOWEL 2X6	
16	XA1842051	NEEDLE BAR SUPPORTER STUD A	
17	X56551050	NEEDLE BAR SUPPORTER STUD C	
18	014400432	SET SCREW, SOCKET (CP) M4X4	
19	XA1843150	SET PLATE	
20	060300616	SCREW, BIND M3X6	
21	XA1844151	NEEDLE RELEASE LEVER ASSY	
22	XA1847051	NEEDLE RELEASE LEVER SHAFT	
23	XA1848051	SPRING	
24	0A2300806	SCREW 3X8B	
25	XA5837101	SPRING	
26	X55983150	NEEDLE THREADER POSITION SETTE	
27	X55984101	NEEDLE BAR HOOK STAND ASSY	
28	012400432	SET SCREW, SOCKET (FT) M4X4	
29	X55990001	NEEDLE BAR GUIDE	
30	060300416	SCREW, BIND M3X4	
31	061300516	SCREW M3 X 5	
32	XA9431051	NEEDLE BAR CRANK ROD ASSY	
33	X58237001	SPRING	
34	XA9434051	NEEDLE BAR CRANK	
35	132051001	SCREW, FLAT SM3.57-40X7 L	
36	XA1849201	NEEDLE BAR ASSY	
37	XA5838001	THREADER HOOK ASSY	
38	014401632	SET SCREW, SOCKET(CP)M4X16	
39	X56851051	LOCK NUT	
40	XA1856051	SPRING	
41	XA9436151	H SHAFT HOLDER ASSY	
42	XA1859051	NEEDLE BAR SUPPORTER STUD	

No.	CODE	NAME	REMARKS
43	X56464001	NEEDLE BAR SUPPORTER ARM STOP	
44	048025346	RETAINING RING, E2.5	
45	052401406	SCREW PAN (S/P WASHER) M4X14	
46	X57822101	NEEDLE BAR PRESSER SPRING	
47	X58511150	WASHER,THRUST	
48	X50559050	ZIGZAG ADJUSTING NUT	
49	XA1860150	WASHER	
50	062301006	SCREW, PAN M3X10	
51	XA1861051	SPRING	
52	XA9438201	NEEDLE PLATE ASSY	
53	X80321001	NT LOWER THREAD CUTTER	
54	X56828151	NEEDLE PLATE COVER	
55	X50487001	SCREW M4	
56	XA5920101	THREAD HOLD GUIDE ASSY	
57	XA3565051	LINK A ASSY	
58	XA3569001	LINK B	
59	XA5851000	HOOK RELEASE PLATE	
60	060260516	SCREW, BIND M2.6X5	
61	XA5852001	THREAD GUIDE ASSY	
62	XZ0002051	NEEDLE CLAMP SCREW	
63	XA1851000	NEEDLE BAR THREAD GUIDE	
64	008020306	SCREW, TRUSS M2X3	
65	XA6035001	PIN	
		THREAD TENSION MECHANISM	
66	XA9441051	THREAD TAKE-UP LEVER ASSY	
67	XC0397051	THREAD TAKE-UP LEVER STUD	
68	048050346	RETAINING RING, E5	
69	XA1866051	WASHER,SPRING	
70	X57913051	TAPTITE,BIND S M4X16	
71	XA9929051	SHAFT PRESSER PLATE	
		PRESSER MECHANISM	
72	XA5854001	PRESSER BAR	
73	XA5511251	PRESSER FOOT LIFTER	
74	XA6190001	STUD FOR PRESSER FOOT LIFTER	
75	X52760051	SET SCREW,PAN M6X12	
76	XA1870151	NEEDLE CLAMP ASSY	
77	137748101	PRESSER FOOT (; ULT2001, ULT2001N, S.G.3000, S.G.3000N)	
	XC3021051	Z FOOT (; ULT2001C, S.G.3000C)	
78	XA4789001	PRESSER FOOT HOLDER ASSY) (; ULT2001, ULT2001N, S.G.3000, S.G.3000N)	
	XC2242051	PRESSER FOOT HOLDER ASSY (; ULT2001C, S.G.3000C)	
79	XA9925001	BH SWITCH ASSY	

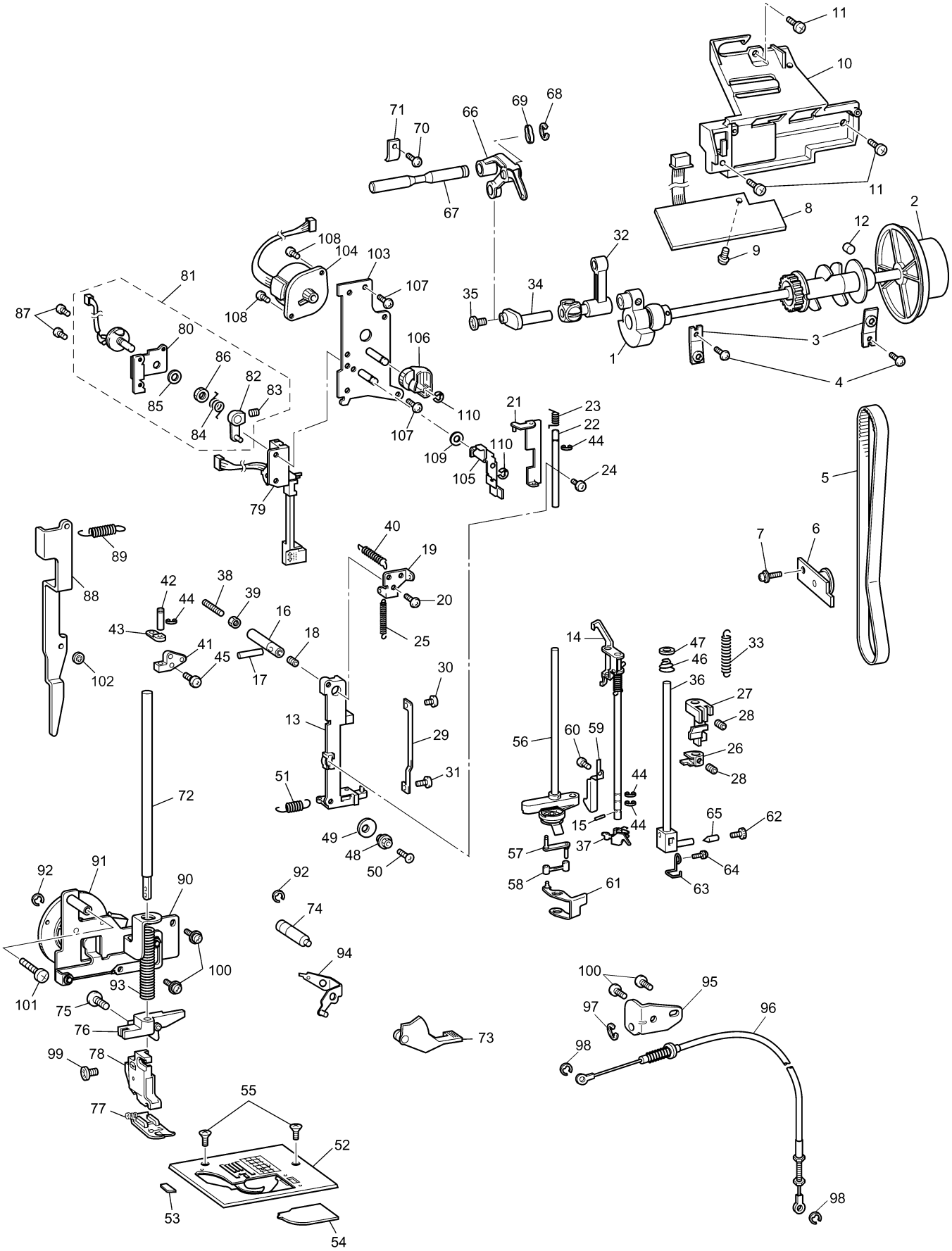
11
10
71
70
66
69
68
67
11
8
2
12
9
32
108
104
103
107
81
87
108
35
34
80
106
3
1
86
82
83
4
85
84
110
21
23
22
44
107
109
110
105
24
5
79
40
19
7
6
89
88
42
38
39
20
44
16
43
18
25
41
45
17
14
47
46
33
102
30
36
27
28
13
29
56
60
59
26
28
51
31
44
72
15
44
65
62
49
48
50
57
37
64
58
61
63
92
91
90
92
74
94
100
100
95
101
93
75
97
96
76
73
98
99
78
77
55
52
53
54
98

(2) UPPER SHAFT / NEEDLE BAR / THREAD TENSION / PRESSER AND ZIGZAG MECHANISM

No.	CODE	NAME	REMARKS
80	XA2222001	PT HOLDER	
81	XA9924001	PT HOLDER ASSEMBLY	
82	XA6493001	PT LEVER	
83	012300632	SET SCREW 3X6	
84	XA1894051	SPRING	
85	026060235	WASHER, PLAIN 6	
86	X52569001	NUT	
87	060300816	SCREW, BIND M3X8	
88	XA9449051	TENSION RELEASER C	
89	XA9787051	SPRING	
90	XA9667251	PRESSER FRAME ASSY	
91	XA9457001	PRESSER DIAL	
92	048050346	RETAINING RING, E5	
93	XA9458151	PRESSER BAR SPRING	
94	XA9873101	LIFTER ASSY	
95	XA9777051	WIRE GUIDE PLATE U	
96	XA9778101	WIRE ASSY.	
97	048040346	RETAINING RING, E4	
98	048030346	RETAINING RING, E3	
99	XA4813051	SCREW	
100	X57908051	TAPTITE,BIND S M4X10	
101	060400616	SCREW, BIND M4X6	
102	120454001	RETAINING RING,CS3	
		ZIGZAG MECHANISM	
103	XA1989251	ZPM HOLDER ASSY	
104	XA9528001	Z PULSE MOTOR	
105	XA2866101	ZIGZAG LEVER	
106	XA1995050	ZIGZAG CAM	
107	X57908051	TAPTITE,BIND S M4X10	
108	060300416	SCREW, BIND M3X4	
109	X53027000	WASHER	
110	048030346	RETAINING RING, E3	

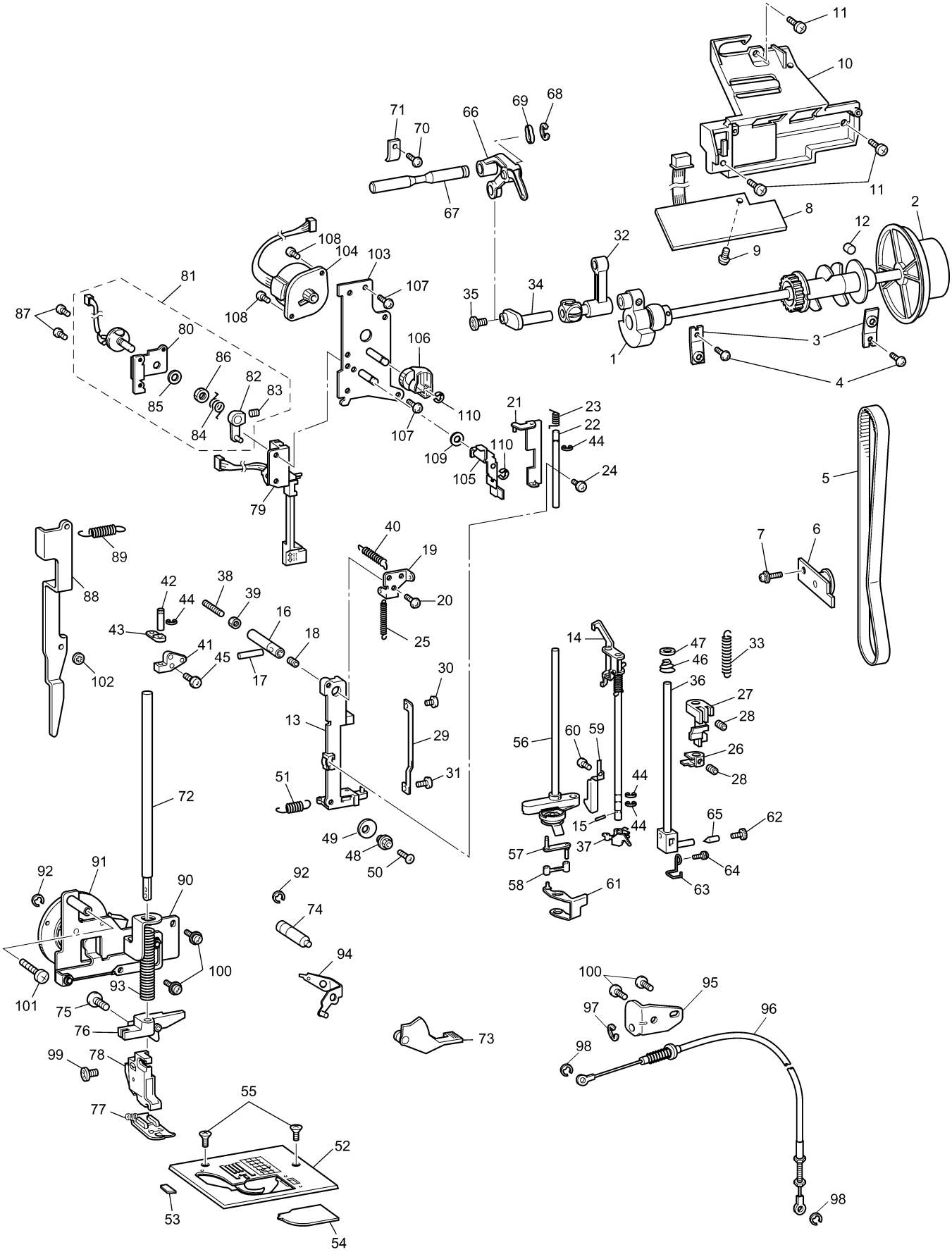
11
10
71
70
66
69
68
67
11
8
2
12
9
32
108
104
103
107
81
87
108
35
34
80
106
3
1
86
82
83
4
85
84
110
21
23
22
44
107
109
110
105
24
5
79
89
40
19
7
6
88
42
38
39
20
44
16
43
18
25
41
45
17
14
47
46
33
102
30
36
27
28
13
29
56
60
59
26
28
51
31
44
72
15
44
65
62
49
48
50
57
37
64
58
61
63
92
91
90
92
74
94
100
100
95
101
93
75
97
96
76
73
98
99
78
55
77
52
53
54
98

(3) HORIZONTAL FEED / FEED ADJUSTMENT AND SIDE FEED MECHANISM

No.	CODE	NAME	REMARKS
		HORIZONTAL FEED MECHANISM	
1	XA9463151	HORIZONTAL FEED ASSY	
2	XA9464050	FEED BAR	
3	XA9485051	HORIZONTAL FEED SHAFT	
4	XA9473001	FEED ADJUSTER ASSY	
5	XA9482000	F GEAR	
6	XA9483001	SPRING,PLATE	
7	048050346	RETAINING RING, E5	
8	X51093000	SPACER	
9	014400632	SET SCREW, SOCKET (CP) M4X6	
10	XA9484000	FEED REGULATOR BLOCK	
11	048050346	RETAINING RING, E5	
12	X59916051	VERTICAL FEED FINGER	
13	012400432	SET SCREW, SOCKET (FT) M4X4	
14	XA9843001	FEED DOG	
15	XA9486001	FEED STAND SPRING	
16	XA9487051	HORIZONTAL FEED SHAFT GUIDE	
17	052401406	SCREW PAN (S/P WASHER) M4X14	
18	014400432	SET SCREW, SOCKET (CP) M4X4	
19	XA9488051	DROP PLATE	
20	XA9489051	DROP KNOB	
21	XA9490051	SPRING, COMPRESSION	
22	XA9491151	SPRING PLATE	
23	XA9470001	FEED ARM PLATE	
24	060300616	SCREW, BIND M3X6	
25	X53330000	WASHER	
26	137947001	CLIP	
		FEED ADJUSTMENT MECHANISM	
27	XA9492101	FPM HOLDER ASSY	
28	XA9499001	F PULNS MOTOR	
29	060300416	SCREW, BIND M3X4	
30	XA2189050	RUBBER	
31	XA9923051	PLATE NUT	
32	XA9500051	SPRING,COMPRESSION	
33	XC3230001	SCREW5X40	
34	021050315	NUT 5	
35	XC0106001	SCREW3X8	
36	048040346	RETAINING RING, E4	
37	026050135	WASHER, PLAIN S 5	
38	X57908051	TAPTITE,BIND S M4X10	
		SIDE FEED MECHANISM	
39	XA9501001	SPM HOLDER ASSY	
40	XA9506051	SIDE FEED GEAR	
41	XA9508051	SPRING,EXTENSION	

No.	CODE	NAME	REMARKS
42	XA9509001	S PULSE MOTOR	
43	060300416	SCREW, BIND M3X4	
44	XA2189050	RUBBER	
45	XA9510051	MAIN PC PLATE HOLDER D	
46	XC0411001	S STOPPER	
47	060300616	SCREW, BIND M3X6	
48	XA9462051	SIDE FEED ARM ASSY	
49	XA9514051	SPRING,PLATE A	
50	060300616	SCREW, BIND M3X6	
51	X57908051	TAPTITE,BIND S M4X10	
52	XA8390001	SCREW	

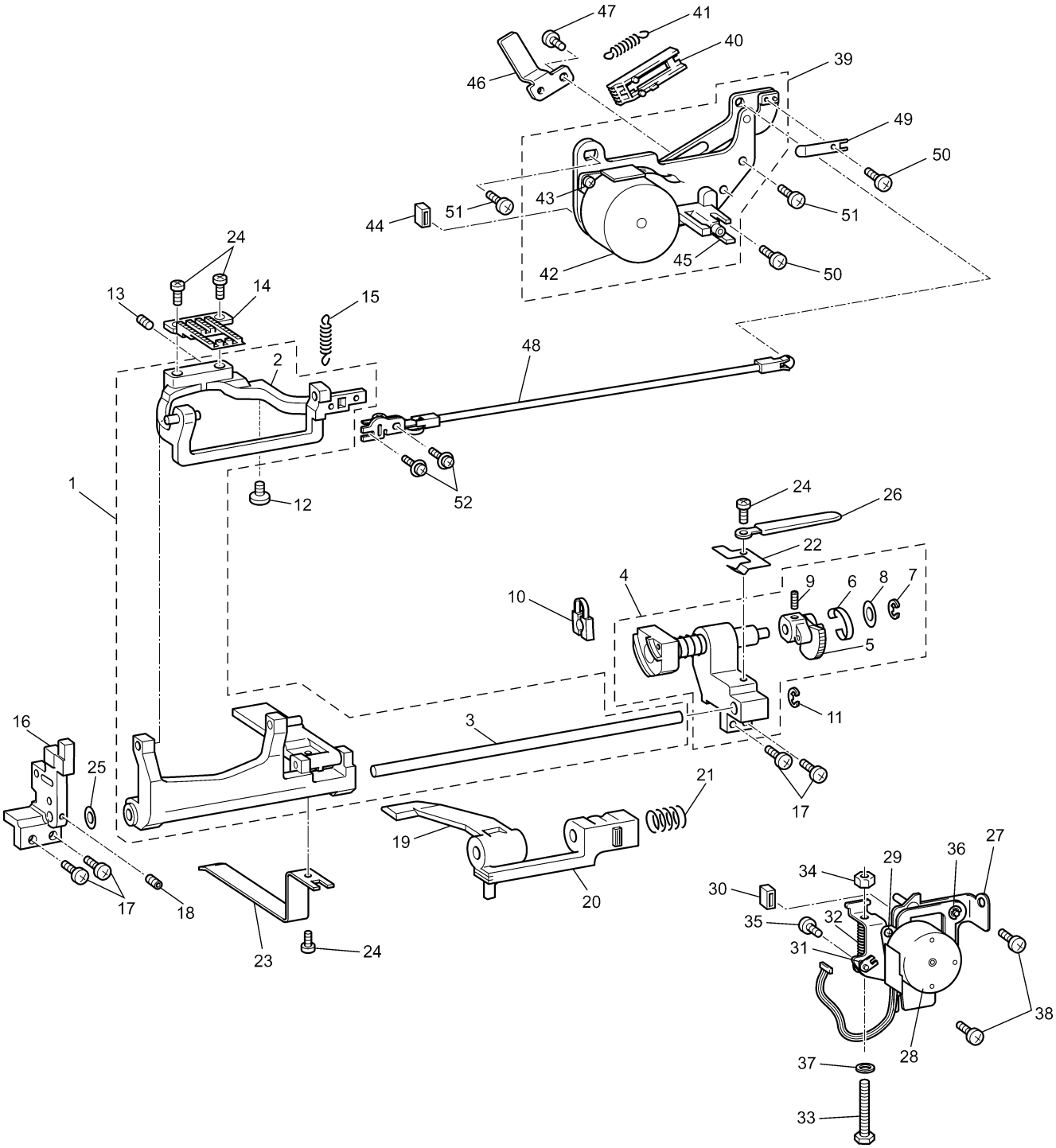
47
41
40
39
46
49
50
43
51
51
44
42
45
50
24
14
13
15
48
2
1
12
52
24
26
22
4
9
6
8
7
10
5
11
16
3
25
21
17
19
20
17
18
23
24
29
36
27
34
30
32
35
31
38
28
37
33

(4) THREAD CUTTING / ROTARY HOOK DRIVE / ROTARY HOOK / BOBBIN WINDER AND THREAD GUIDE MECHANISM

No.	CODE	NAME	REMARKS
		THREAD CUTTING MECHANISM	
1	XA9515251	THREAD CUTTER ASSEMBLY	
2	XA2848151	MOVABLE BLADE ASSY	
3	X56133051	FIXED BLADE	
4	XA9518151	LOWER THREAD GUIDE ASSY	
5	XA2578251	THREAD CUTTER SOLENOID ASSY	
6	060300416	SCREW, BIND M3X4	
7	X53169050	BAND	
8	060400816	SCREW, BIND M4X8	
9	060300616	SCREW, BIND M3X6	
		ROTARY HOOK DRIVE MECHANISM	
10	XA9522001	LOWER SHAFT COMPLETE	
11	132421001	BUSHING PRESSER	
12	XA1975051	BUSHING PRESSER L	
13	X57908051	TAPTITE,BIND S M4X10	
14	XC3183001	FELT (; ULT2001C, S.G.3000C)	
		ROTARY HOOK MECHANISM	
15	XA2855101	OUTER ROTARY HOOK ASSY (; ULT2001, ULT2001N, S.G.3000, S.G.3000N)	
	XC3185051	OUTER ROTARY HOOK ASSY (; ULT2001C, S.G.3000C)	
16	XA5869001	INNER ROTARY HOOK BRACKET ASSY	
17	060400816	SCREW, BIND M4X8	
18	XC0426101	INNER ROTARY HOOK ASSY	
19	XA0360051	OUTER ROTARY HOOK SHAFT (; ULT2001, ULT2001N, S.G.3000, S.G.3000N)	
	XC3186051	OUTER ROTARY HOOK SHAFT (; ULT2001C, S.G.3000C)	
20	XC3187051	OUTER ROTARY HOOK WASHER (; ULT2001C, S.G.3000C)	
21	XA2190000	WASHER U	
22	014401632	SET SCREW, SOCKET(CP)M4X16	
23	XA0362051	WASHER (; ULT2001, ULT2001N, S.G.3000, S.G.3000N)	
	137805051	SPACER (; ULT2001C, S.G.3000C)	
24	XA9526001	ASSY,PHOTO TRANSISTOR	
25	052300606	SCREW, PAN (S/P WASHER) M3X6	
26	XA9524001	ASSY,PHOTODIODE LEAD WIRE	
27	060020416	SCREW, BIND M2X4	
		BOBBIN WINDER MECHANISM	
28	XA9530051	BOBBIN WINDER HOLDER ASSY	
29	XA9534001	MOTOR(DC 24V 0.5W NO)	
30	XA5876001	BOBBIN BASE ASSY	
31	XA9540101	BOBBIN PRESSURE	CHG

No.	CODE	NAME	REMARKS
32	XA9541051	BOBBIN PRESSURE GUIDE ASSY	
33	137999000	POLYESTER SLIDER	
34	048030346	RETAINING RING, E3	
35	XA9545051	SPRING	
36	XA9546001	ASSY,BW SWITCH	
37	062260516	SCREW, PAN M2.6X5	
38	XA9548051	SPRING,PLATE	DEL
39	XA9549151	TENSION GUIDE ASSY	
40	052300606	SCREW, PAN (S/P WASHER) M3X6	
41	XA9797051	THREAD GUIDE PLATE	
42	060300416	SCREW, BIND M3X4	
43	X50532001	PRESSER PLATE	
44	XA9799002	BOBBIN WINDERUPPER COVER	
45	060300616	SCREW, BIND M3X6	
46	X57908051	TAPTITE,BIND S M4X10	
		THREAD GUIDE MECHANISM	
47	XA9551101	UPPER TENSION COMPLETE UNIT	
48	XA9553251	THREAD TENSION PLATE ASSY	
49	108263001	TENSION DISC	
50	XC3437051	TENSION ADJUSTING SCREW	
51	137881001	TENSION DISC WASHER	
52	XA9559051	TENSION RELEASE PLATE A ASSY	
53	XA9900001	THREAD TENSIONSPRING	
54	109763003	WASHER	
55	XA9562051	TENSION PLATE ASSY	
56	XC3252001	THREAD TENSIONCAM	
57	048030346	RETAINING RING, E3	
58	XA9625000	THREAD TENSION GEAR COVER	
59	X56323051	SPRING	
60	XA9935000	SPRING TAPE	
61	XA9566001	TENSION RELEASE ASSY	
62	XA9571001	TENSION RELEASERLINK	
63	XA9573001	TENSION RELEASE CAM	
64	XA9938001	TENSION PYESSER ASSY	
65	XA9575001	TENSION PLATE	
66	XA9576001	SPACER	
67	XA9577001	SPRING	
68	012300432	SET SCREW, SOCKET (FT) M3X4	
69	048030346	RETAINING RING, E3	
70	XA9997001	SCREW M2X3	
71	X57605001	SPRING	
72	048020346	RETAINING RING, E2	
73	XA9578051	THREAD GUARD ASSY	
74	XA9581051	THREAD TAKE-UP LEVER GUARD	

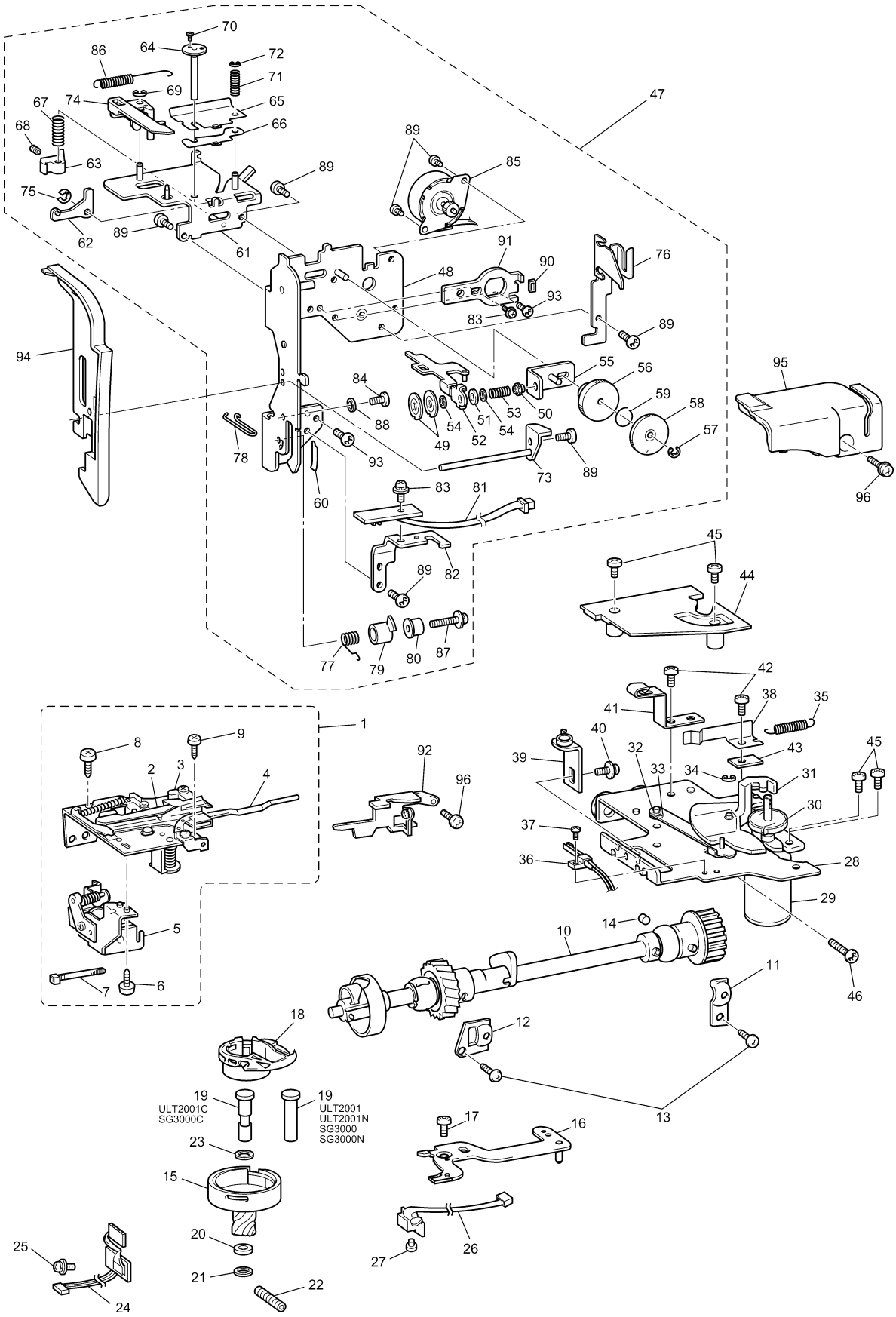
ULT2001C
SG3000C
ULT2001
ULT2001N
SG3000
SG3000N

(4) THREAD CUTTING / ROTARY HOOK DRIVE / ROTARY HOOK / BOBBIN WINDER AND THREAD GUIDE MECHANISM

No.	CODE	NAME	REMARKS
		THREAD GUIDE MECHANISM	
75	048030346	RETAINING RING, E3	
76	XA9582051	THREAD GUIDE	
77	XA9583001	THREAD TAKE UP	
78	XA9584050	THREAD GUIDE WIRE	
79	X58316001	THREADCUTTING SHUTTER	
80	XA9585001	THREAD CATCHING SPRING CASE	
81	XA9586001	CHECK SPRING SENSOR	
82	XA9589051	THREAD SENSOR HOLDER	
83	052300606	SCREW, PAN (S/P WASHER) M3X6	
84	060300516	SCREW, BIND M3X5	
85	XA9591001	AT PULSE MOTOR	
86	XA9601101	SPRING	
87	0A4301804	SCREW	
88	XA9996001	WASHER,PLAIN	
89	060300416	SCREW, BIND M3X4	
90	XC3253051	RUBBER	
91	XC3254051	INITIAL ADJUST PLATE	
92	XA2935051	THREAD GUIDE PLATE	
93	X57908051	TAPTITE,BIND S M4X10	
94	XA9871102	THREAD GUIDE COVER	
95	XA9872004	FRONT THREAD GUARD COVER	
96	060300616	SCREW, BIND M3X6	

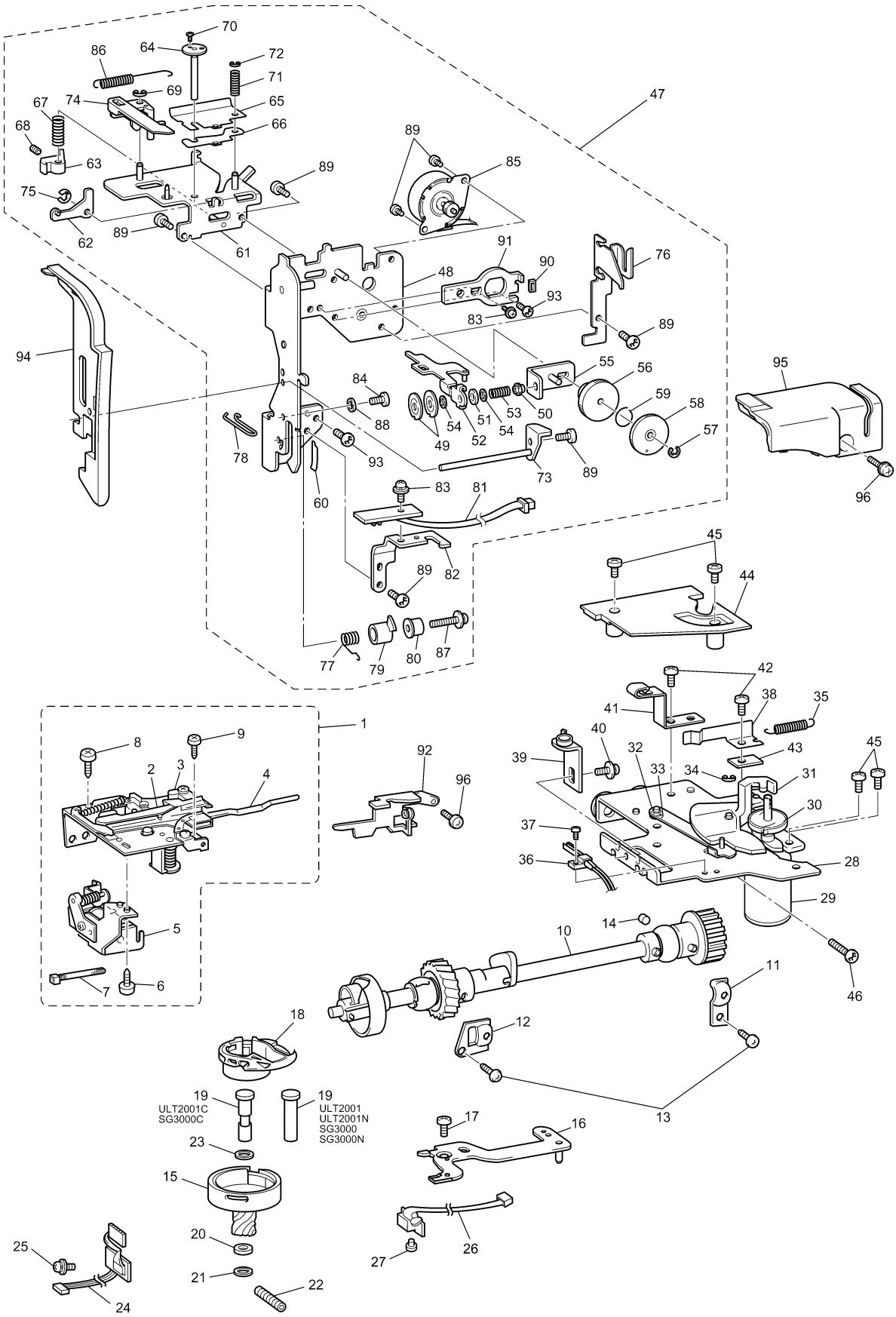
ULT2001C
SG3000C
ULT2001
ULT2001N
SG3000
SG3000N

(5) LAMP MECHANISM / ELECTRONIC PARTS / MOTOR UNIT

No.	CODE	NAME	REMARKS
		LAMP MECHANISM	
1	XA2037001	WB SEW LIGHT BULB	
2	XA9596001	SUB ASSY,WBLSOCKET	
3	002261205	SCREW, PAN M2.6X12	
4	XA5879051	LAMP HOLDER	
5	060300416	SCREW, BIND M3X4	
		ELECTRONIC PARTS	
6	XA9598001	ASSY, MAIN PCB	
7	052300606	SCREW, PAN (S/P WASHER) M3X6	
8	XA9619001	UNIT,CARD PCB	
9	XA9620001	LEAD WIRE	
10	XA9621001	LEAD WIRE	
11	XA2220050	BOARD PRESSER	
12	XA9628001	ASSY,SS PCB	
13	XA9631001	ASSY,VR PCB	
14	XA9634001	INVERTER	
15	XA9635001	SUB ASSY,CFL LEAD WIRE	
16	XA9639001	FDD:FD-05HG-5661	
17	XA9640001	FLEXIBLE FLAT CABLE :SML2CD-26	
18	XA9642001	HOLDER R	
19	XA9643000	CORD HOLDER	
20	X57908051	TAPTITE,BIND S M4X10	
21	XA9946001	FD HOLDER	
22	136681001	TAPTITE, BIND B M3X8	
23	060260316	SCREW, BIND M2.6X3	
24	026040236	WASHER, PLAIN 4	
25	XC4293001	POWER SUPPLY UNIT ASSY FOR 120	
	XC4295001	POWER SUPPLY UNIT ASSY FOR 230	
26	XA9760001	GLASS FUSE FOR 120V	
		GLASS FUSE FOR 230V	
27	U32809001	GLASS FUSE FOR 120V	
	XA9761001	GLASS FUSE FOR 230V	
28	XA9762001	GLASS FUSE FOR 120V	
		GLASS FUSE FOR 230V	
29	052401406	SCREW PAN (S/P WASHER) M4X14	
30	XA9961001	ASSY,INLET120	
	XA9941001	ASSY,INLET230	
31	060400616	SCREW, BIND M4X6	
32	XA2815151	POWER SUPPLY CORD FOR UL,CS	
	XA0070051	POWER SUPPLY CORD FOR EUROPE	

No.	CODE	NAME	REMARKS
32	XC9548051	POWER SUPPLY CORD : SAA-LF (AUSTRALIA, NEW ZEALAND)	040186
	X57079001	POWER SUPPLY CORD FOR SAA	
	XA1291051	POWER SUPPLY CORD FOR KOREA	
33	X81280001	FOOT CONTROLLER JACK ASSY	
		MOTOR UNIT	
34	XA9644000	T BELT	
35	XA9645001	COMPLETE,MAIN MOTOR	
36	XA5901001	UP SET	
37	XA9652150	MOTOR FAN	
38	XC6653151	FOOT CONTROLLER : FC-314-81-LF (120V)	CHG
	XC6655001	FOOT CONTROLLER : LF	
	XD0498001	FOOT CONTROLLER : FC-LF-EU	050033

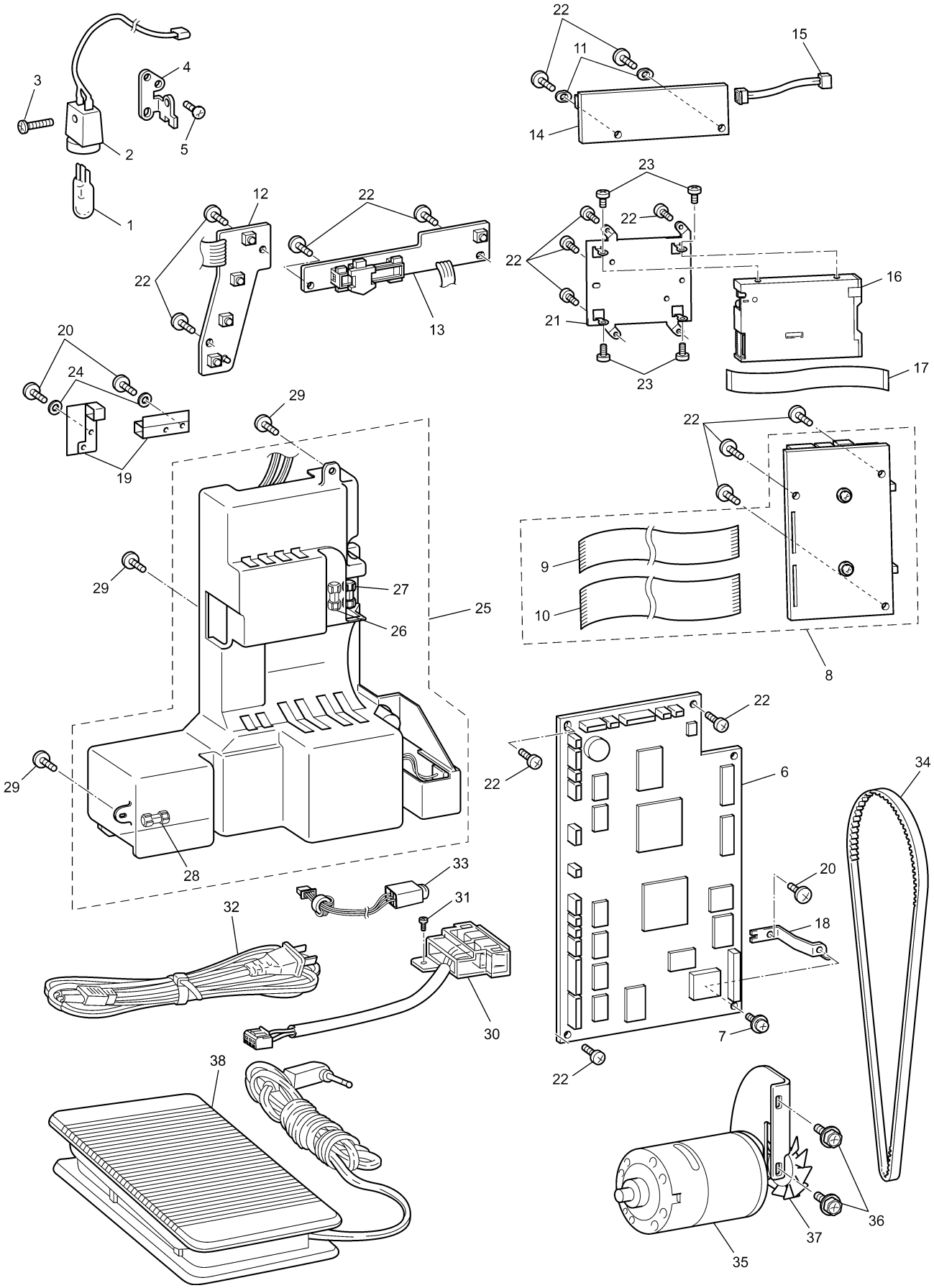

1
2
3
4
5
6
7
8
9
10
11
12
13
14
15
16
17
18
19
20
21
22
23
24
25
26
27
28
29
30
31
32
33
34
35
36
37
38

(6) EMBROIDERY UNIT

No.	CODE	NAME	REMARKS
1	XA9653101	MAIN FRAME SUD ASSY	
2	XC3189050	X DRIVING GEAR PULLEY A	
3	XC3190050	X DRIVING GEAR PULLEY B	
4	XA9656001	X PULSE MOTOR	
5	XC3191001	TIMING BELT 40S2M494	
6	XA9661001	X GUIDE SHAFT	
7	XA9662101	X CARRIAGE ASSY	
8	XA9668001	X SLIDER	
9	XA9795000	CODE GUIDE Y	
10	XA9669001	X GUIDE PLATE	
11	XA9670101	X BELT PRESSER	
12	XA9671001	ASSY,XSENSOR PCB	
13	XC3227001	Y DRIVING GEAR PULLEY A	
14	XC3194051	SPRING FOR GEAR	
15	XC3192001	Y DRIVING GEAR PULLEY B	
16	025060235	WASHER, PLAIN M 6	
17	048040346	RETAINING RING, E4	
18	XC3193001	TIMING BELT 40S2M656	
19	XA9676001	Y GUIDE SHAFT	
20	XA7680001	STOP RING 9.25	
21	XA9677001	WASHER	
22	XA9678001	WASHER	
23	XA9679001	Y CARRIAGE ASSY	
24	XA9682001	Y SLIDER	
25	XA9683001	Y PULSE MOTOR:M35SP-9N	
26	XA8390001	SCREW	
27	XA9684101	Y-SENSOR PCB ASSEMBLY	
28	XA9687150	CODE GRIP	
29	060300616	SCREW, BIND M3X6	
30	XA9832150	CORD CRIP B	
31	XA9688001	FRAME PCB ASSY	
32	XA9692101	FLEXIBLE FLAT CABLE:SML2CD-4	
33	XA9657051	TENSION PULLEY ASSY	
34	XA9693001	ASSY,EMB UNITLEAD WIRE	
35	085301615	TAPTITE, BIND P M3X16	
36	XA9695002	X CARRIAGE COVER	
37	XA9696101	YPM COVER	
38	085301017	TAPTITE, BIND P M3X10	
39	XA9697001	ES BASE COVER	
40	XA9694001	GRO0VE COVER	
41	X59853000	RUBBER CUSHION	
42	XA5349050	ROCK FINGER	
43	XA0814001	SHAFT	
44	XA2157051	SPRING	

No.	CODE	NAME	REMARKS
45	085301017	TAPTITE, BIND P M3X10	
46	XA9699001	ROCK RELEASE LEVER	
47	052400806	SCREW, PAN (S/P WASHER) M4X8	
48	XA9793001	ES MAIN COVERASSY	
49	XA9694001	GRO0VE COVER	
50	087411416	TAPTITE, CUP B M4X14	
51	XA9700001	FRAME SUB ASSY	
52	XA9703001	SPRING COMPRESSION4.6X20	
53	048025346	RETAINING RING, E2.5	
54	XA9704001	FRAME LOCK LEVER	
55	T31049001	COATING CLIP CS-6	
56	060400616	SCREW, BIND M4X6	
57	XC0444001	SPRING COMPRESSION 6X19	
	X81292011	EMBROIDERY UNIT ASSEMBLY (; ULT2001, ULT2001N, S.G.3000, S.G.3000N)	050021
	XC3188011	EMBROIDERY UNIT ASSEMBLY (; ULT2001C, S.G.3000C)	050021

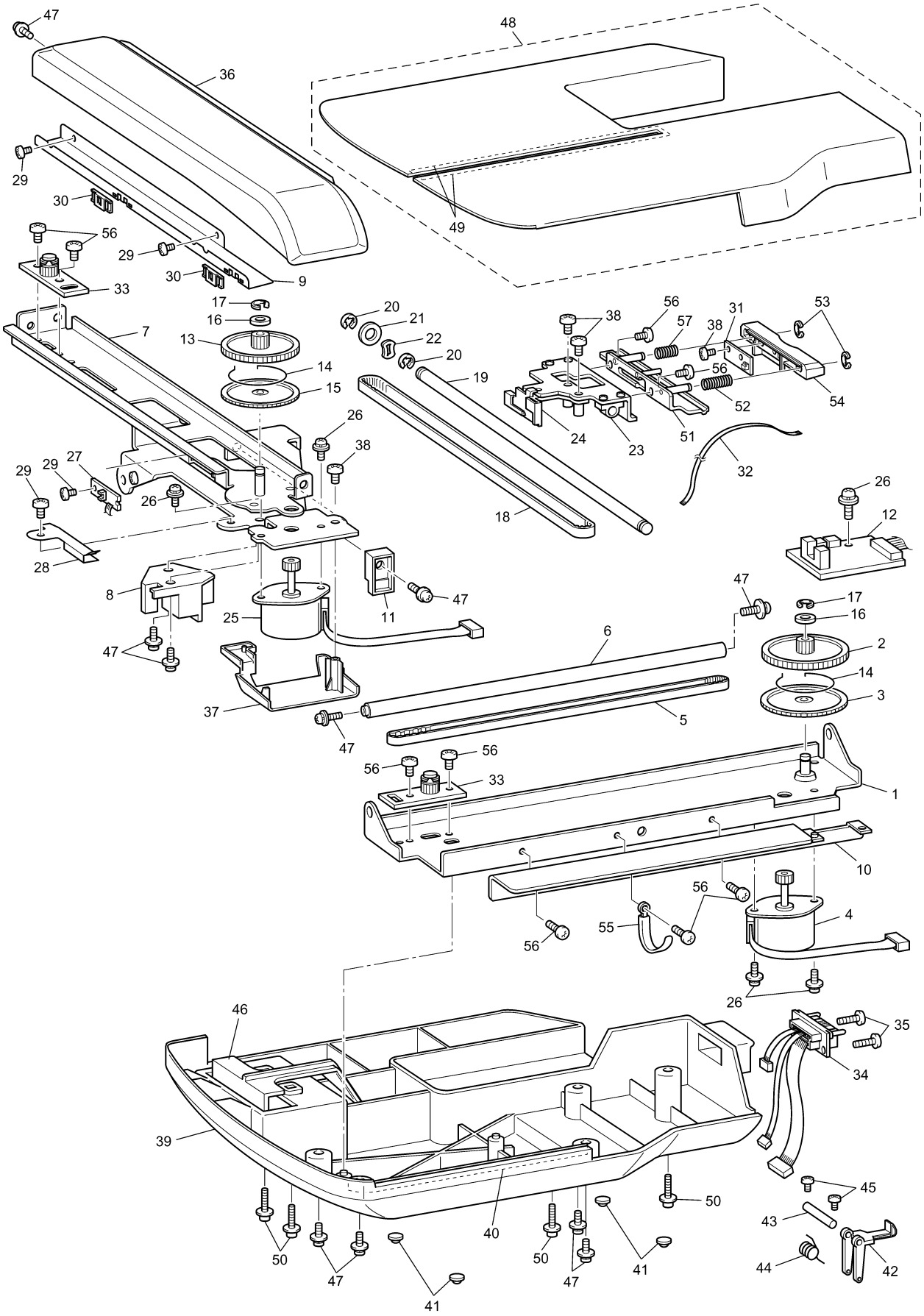
47
48
36
29
30
56
29
30
9
33
49
17
16
13
14
15
7
20
21
22
20
19
38
56
57
38
31
53
56
52
54
24
23
51
32
26
38
29
29
27
26
28
18
26
12
8
47
25
11
47
17
16
6
2
14
3
37
47
5
56
56
33
1
10
56
4
55
56
26
46
35
34
39
45
50
43
40
50
50
47
47
41
41
44
42

(7) ATTACHMENTS, PRINTED MATTER, PACKING MATERIALS

No.	CODE	NAME	REMARKS
		ATTACHMENTS	
1	X51162001	OVERLOCK STITCH FOOT ASSY	
2	X59370051	ZIPPER FOOT	
3	X56409001	BLIND STITCH FOOT ASSY	
4	X57789101	BH PRESSER FOOT	
5	X53840301	TRANSPARENCY PRESSER FOOT	
6	136492101	BOBBIN	
7	X54243001	SEAM RIPPER	
8	130489001	BUTT0NING F00T	
9	X58358001	Z NEEDLE ASSY	
10	184783001	SCISSORS	
11	184944001	CHALK PEN	
12	X59476051	CLEANING BRUSH	CHG
13	135793001	PUNCH	
14	XC1074051	NEEDLE PLATE FIXING METAL	
15	X55467051	SCREW DRIVER	
16	X55468051	SCREW DRIVER S	
17	130012054	SPOOL PRESSER A	CHG
18	130013004	SPOOL PRESSER B	
19	X59296101	TWIN NEEDLE (1PC)	
20	127610000	SPOOL NETS	
21	XC4487051	ACCESSORY BAG	
22	XA9939051	NEEDLE PLATE COVER	
23	X81064001	WALKING FOOT ASSY	ACC
24	X81175101	BACKING MATERIAL 28CM X 3M	ACC
25	X81178001	3 COLORS EMBROIDERY SET	
26	X80943001	SIDE CUTTER ASSY (ULT2001, ULT2001N, S.G.3000, S.G.3000N)	
	XC3198001	SIDE CUTTER ASSY (ULT2001C, S.G.3000C)	
27	XA0188000	BAG	
28	X81277000	MY CUSTOM SHEET	ACC
29	XA5904051	SCREW	
30	XA6027001	ADAPTOR FOR LOW SHANK	
31	XC1274001	EMBROIDERY FOOT 'Q'	
	XC5269001	EMBROIDERY FOOT 'Q+' (ULT2001C, S.G.3000C)	
32	XA6941001	KNEE LIFTER LEVER ASSY	
33	XA8391001	EMBROIDERY UNDER THREAD	
34	XA9940001	TOUCH PEN	
35	X55260153	SPOOL PRESSER C	
36	XC1398101	ACCESSORY TRAY (ULT2001N, ULT2001C, S.G.3000N,	

No.	CODE	NAME	REMARKS
37	XC1678001	SPONGE (ULT2001N, ULT2001C, S.G.3000N,	
38	XA3336051	SPOOL PIN (ULT2001C, S.G.3000C)	
39	X57045001	SPOOL FELT (ULT2001C, S.G.3000C)	
40	XA9724001	EF66 (EMBROIDERY SHEET 60)	ACC
41	XA9718001	EF67 (EMBROIDERY SHEET 100)	ACC
42	XC1342001	EF70 200 EMBROIDERY SHEET MP (130)	ACC
43	XA9712001	EF68 (EMBROIDERY SHEET1160)	ACC
44	X56373101	THUMB SCREW	
45	X59422001	WASHER	
46	XA6982001	NUT	
47	XC1291001	CARRYING CASE (UPC)	ACC
	XC1291002	CARRYING CASE (EAN)	ACC
		PRINTED MATTER	
48		ULT2001, S.G.3000	
	191200011	INSTRUCTION BOOK (English)	
	191200015	INSTRUCTION BOOK (French)	
	191200013	INSTRUCTION BOOK (German)	
	191200012	INSTRUCTION BOOK (Spanish)	
	191200014	INSTRUCTION BOOK (Dutch)	
	191200016	INSTRUCTION BOOK (Italian)	
		ULT2001N, S.G.3000N	
	193220011	INSTRUCTION BOOK (English)	
	193220015	INSTRUCTION BOOK (French)	
	193220013	INSTRUCTION BOOK (German)	
	193220012	INSTRUCTION BOOK (Spanish)	
	193220014	INSTRUCTION BOOK (Dutch)	
	193220016	INSTRUCTION BOOK (Italian)	
		ULT2001C, S.G.3000C	
	XC3200001	INSTRUCTION BOOK (English)	
	XC3261001	INSTRUCTION BOOK (French)	
	XC3860001	INSTRUCTION BOOK (German)	
	XC3858001	INSTRUCTION BOOK (Spanish)	
	XC3262001	INSTRUCTION BOOK (Spanish)	
	XC3859001	INSTRUCTION BOOK (Italian)	
49	192200011	QUICK REFERENCE GUIDE (ULT2001, S.G.3000)	
	193220060	INSTRUCTION BOOK (ULT2001N, S.G.3000N)	
	XC3265001	QUICK REFERENCE GUIDE (ULT2001C, S.G.3000C)	
50	XC0708001	CAUTION SHEET	
51	XC0890001	CAUTION SHEET	
52	XC5402001	INSERTION SHEET (ULT2001C, S.G.3000C)	

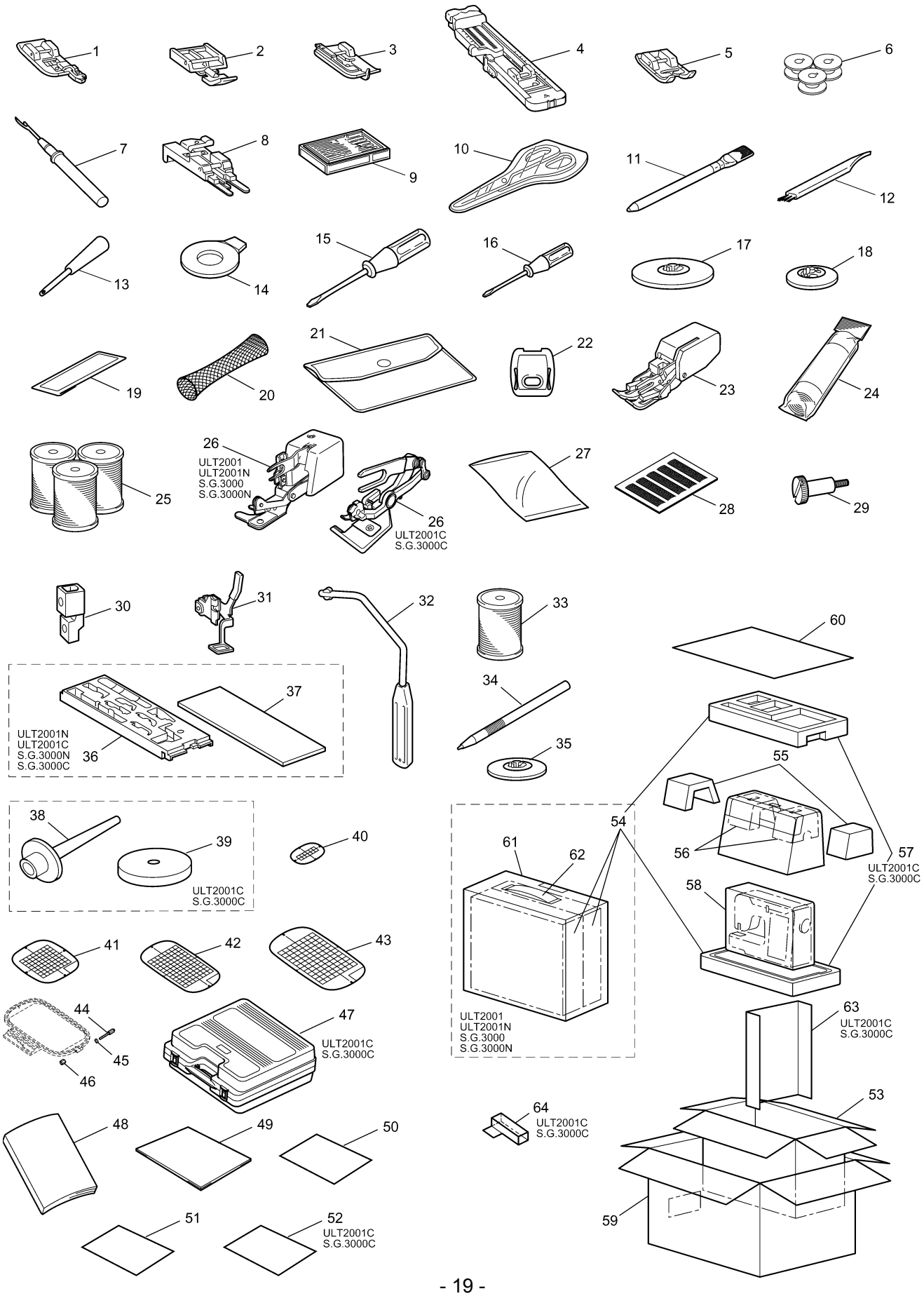
1
2
3
4
5
6
7
8
9
10
11
12
13
14
15
16
17
18
19
20
21
22
23
24
25
26
ULT2001
ULT2001N
S.G.3000
S.G.3000N
26
ULT2001C
S.G.3000C
27
28
29
30
31
32
33
34
35
36
37
ULT2001N
ULT2001C
S.G.3000N
S.G.3000C
38
39
40
ULT2001C
S.G.3000C
41
42
43
44
45
46
47
ULT2001C
S.G.3000C
48
49
50
51
52
ULT2001C
S.G.3000C
53
54
55
56
57
ULT2001C
S.G.3000C
58
59
60
61
62
ULT2001
ULT2001N
S.G.3000
S.G.3000N
63
ULT2001C
S.G.3000C
64
ULT2001C
S.G.3000C

(7) ATTACHMENTS, PRINTED MATTER, PACKING MATERIALS

No.	CODE	NAME	REMARKS
		PACKING MATERIALS	
53	X61500000	CARTON	
54	X61522001	SF ASSY (ULT2001, ULT2001N, S.G.3000, S.G.3000N)	
55	X61507001	SF ASSY	
56	X61523001	SF ASSY	
57	XC3202001	POLYSTYRENE ASSY (ULT2001C, S.G.3000C)	
58	X60439100	BAG,630X630T	
59	X61555101	MASTER CARTON (ULT2001, ULT2001N)	
	XC4397001	MASTER CARTON (ULT2001C)	
	X61556101	MASTER CARTON (S.G. 3000, S.G.3000N)	
	XC3872001	MASTER CARTON (S.G.3000C)	
60	X61569101	PAD D 200	
61	X61505001	EMBROIDERY CARTON D (ULT2001, ULT2001N, S.G.3000 S.G.3000N)	
62	418859001	HANDLE (ULT2001, ULT2001N, S.G.3000, S.G.3000N)	
63	XC3207000	ES PAD D (ULT2001C, S.G.3000C)	
64	XC3197001	CARRIAGE PAD D (ULT2001C, S.G.3000C)	
	XC4601051	WARRANTY CARD	

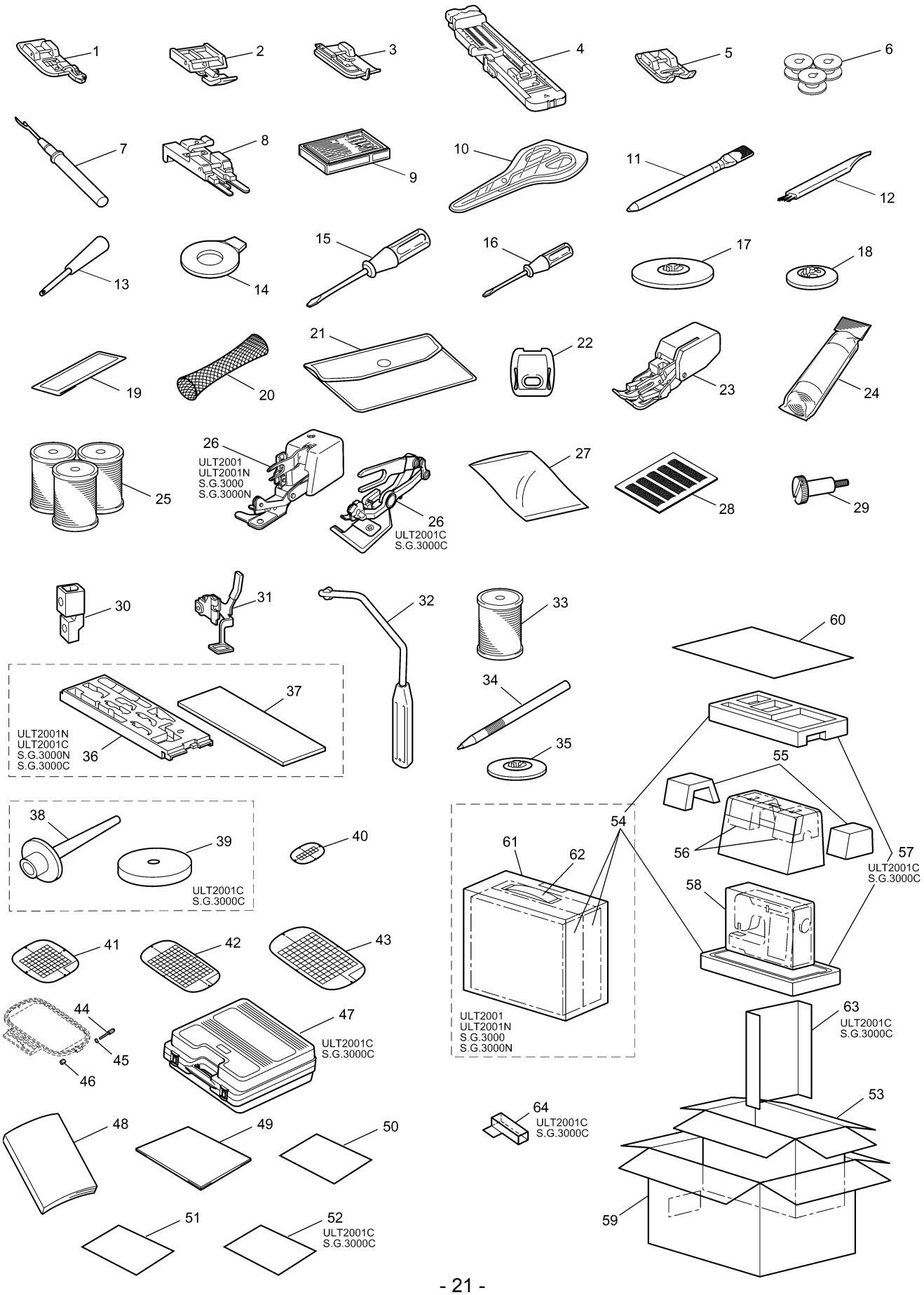
1
2
3
4
5
6
7
8
9
10
11
12
13
14
15
16
17
18
19
20
21
22
23
24
25
26
ULT2001
ULT2001N
S.G.3000
S.G.3000N
26
ULT2001C
S.G.3000C
27
28
29
30
31
32
33
60
34
35
37
ULT2001N
ULT2001C
S.G.3000N
S.G.3000C
36
55
38
39
40
54
61
62
56
57
ULT2001C
S.G.3000C
58
ULT2001C
S.G.3000C
41
42
43
44
45
46
47
ULT2001C
S.G.3000C
ULT2001
ULT2001N
S.G.3000
S.G.3000N
63
ULT2001C
S.G.3000C
53
64
ULT2001C
S.G.3000C
48
49
50
59
51
52
ULT2001C
S.G.3000C

• LCD MODULE ASSY

No.	CODE	NAME	REMARKS
1	085200615	Screw P2 x 6	
2	X81375001	LCD module ASSY for U.S.A.	
	X81376001	LCD module ASSY	
3	XA6039001	FRONT COVER SPACER B	
4	XA9404001	TOUCH PANEL:EMU601A2B040	
5	XA9636001	PCB LINKAGE FOR LCD AND CARD	

No.	CODE	NAME	REMARKS
6	XA9869001	TP-LCD HOLDER	
7	XC0013001	DECORATION BADGE FOR ULT2001	
	XC0014001	DECORATION BADGE FOR SG3000	
8	X81299103	LCD MODULE ASSY (;ULT*)	
	X81299104	LCD MODULE ASSY (;S.G.*)	

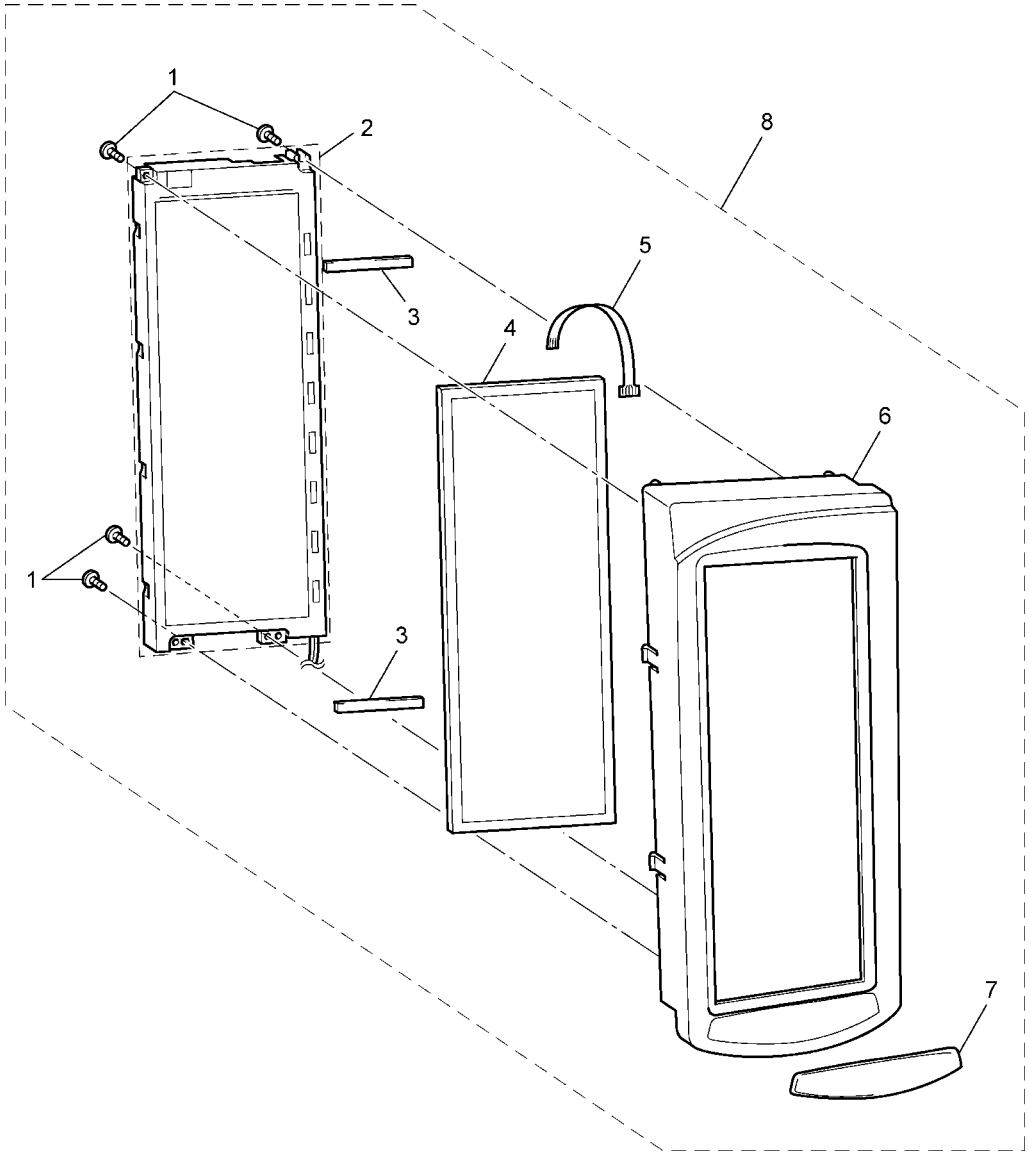

ULT2001
ULT2001N
ULT2001C
S.G. 3000
S.G. 3000N
S.G. 3000C
XXB03HF114200
Printed in Japan