PARTS CATALOGUE FOR

COMPUTERIZED

SEWING MACHINE

PC-8200
SUPER GALAXIE 2000

9. 1997.

CONTENTS

(1) PRINCIPAL PARTS <B985> ····· 2- 3

(2) UPPER SHAFT AND NEEDLE BAR ····· 4- 7

(3) FEED MECHANISM ····· 8- 9

(4) ROTARY HOOK, THREAD GUIDE AND THREAD CUTTING <B985> ····· 10-11

(5) LAMP, MAIN PC BOARD ASSEMBLY AND MOTOR UNIT <B985> ····· 12-13

(6) ACCESSORY <B985> ····· 14-15

(7) EMBROIDERY UNIT <B985> ····· 16-17

(1) PRINCIPAL PARTS <B985>

Ref-No.	Parts No.	Parts Name	Remarks
1	XA1785203	Rear cover PC-8200	CHG
	XA1785204	Rear cover S.G 2000	CHG
2	XA1786051	Spool pin	
3	XA3499051	Spool pin shaft	
4	XA4324001	Bobbin presser	CHG
5	062301616	Screw 3 × 16	
6	021300106	Nut 3	
7	XA5822101	Thread guide holder assembly	CHG
8	136681001	Screw B3 × 8	
9	XA5955101	Thread guide plate assembly	CHG
10	136681001	Screw B3 × 8	
11	XA1794003	Thread guide cover	
12	087411415	Screw B4 × 14	
13	XA1795151	Carrying handle	CHG
14	XA6459001	Carrying handle shaft	CHG
15	048040346	Stop ring E4	
16	XA1797050	Handle holder	
17	X57908051	Screw S4 × 10	
18	XA1799102	Face plate	CHG
19	X80321001	NT thread cutter assembly	
20	XA0199001	CS stop ring CSTW-8	
21	XA1800101	Needle threader lever knob	CHG
22	XA1801001	Needle threader lever	
23	X51469001	Needle threader lever shaft	
24	138260001	Spring	
25	XC0508000	Washer	CHG
26	XA6320000	Shaft presser plate	CHG
27	513159001	Washer	
28	138433001	Screw B3 × 6	
29	060401616	Screw 4 × 16	
30	XA1803151	Free arm cover	CHG
31	0A6400806	Screw 4 × 8F	
32	XA1804150	Base plate	CHG
33	X57908051	Screw S4 × 10	
34	XA1805051	Rubber cushion A	CHG
35	XA1806051	Base cover	
36	060400616	Screw M4 × 6	
37	X80949101	Front cover PC-8200	
	X80950101	Front cover S.G 2000	
38	XA1808051	S key top	
39	XA1809050	SV connecting block	

Ref-No.	Parts No.	Parts Name	Remarks
40	XA3247001	SS button PC-8200	
	XA1810001	SS button S.G 2000 ,CANADA	CHG
41	XA1811051	Reverse sewing button	
42	XA1812051	NP button	
43	XA1813051	Thread cutting button	
44	087411415	Screw B4 × 14	
45	XA1814251	Cover	
46	U12017001	Screw 3 × 6	
47	XA2864202	Belt cover	CHG
48	060400616	Screw M4 × 6	
49	XA1816001	Accessory table assembly	
50	138644051	Accessory table notched spring	
51	X51434000	Sponge	
52	XA1819051	Set plate U	
53	060300416	Screw 3 × 4	
54	XA1820050	Set plate D	
55	X57908051	Screw S4 × 10	
56	X50442001	Screw cover	
57	XA1821106	Case assembly	CHG
58	XA2442001	Embroidery unit band	
59	XA2831000	Foaming sheet	
60	146200001	Stop ring CS4	
61	XA2438001	Decoration plate	
62	048025346	Stop ring	
63	XA3248001	Decoration plate PC-8200	
	XA3355001	Decoration plate S.G 2000	
64	X51895051	Fixing Face plate	
65	XA4718000	Washer 5.5 × 9	

1

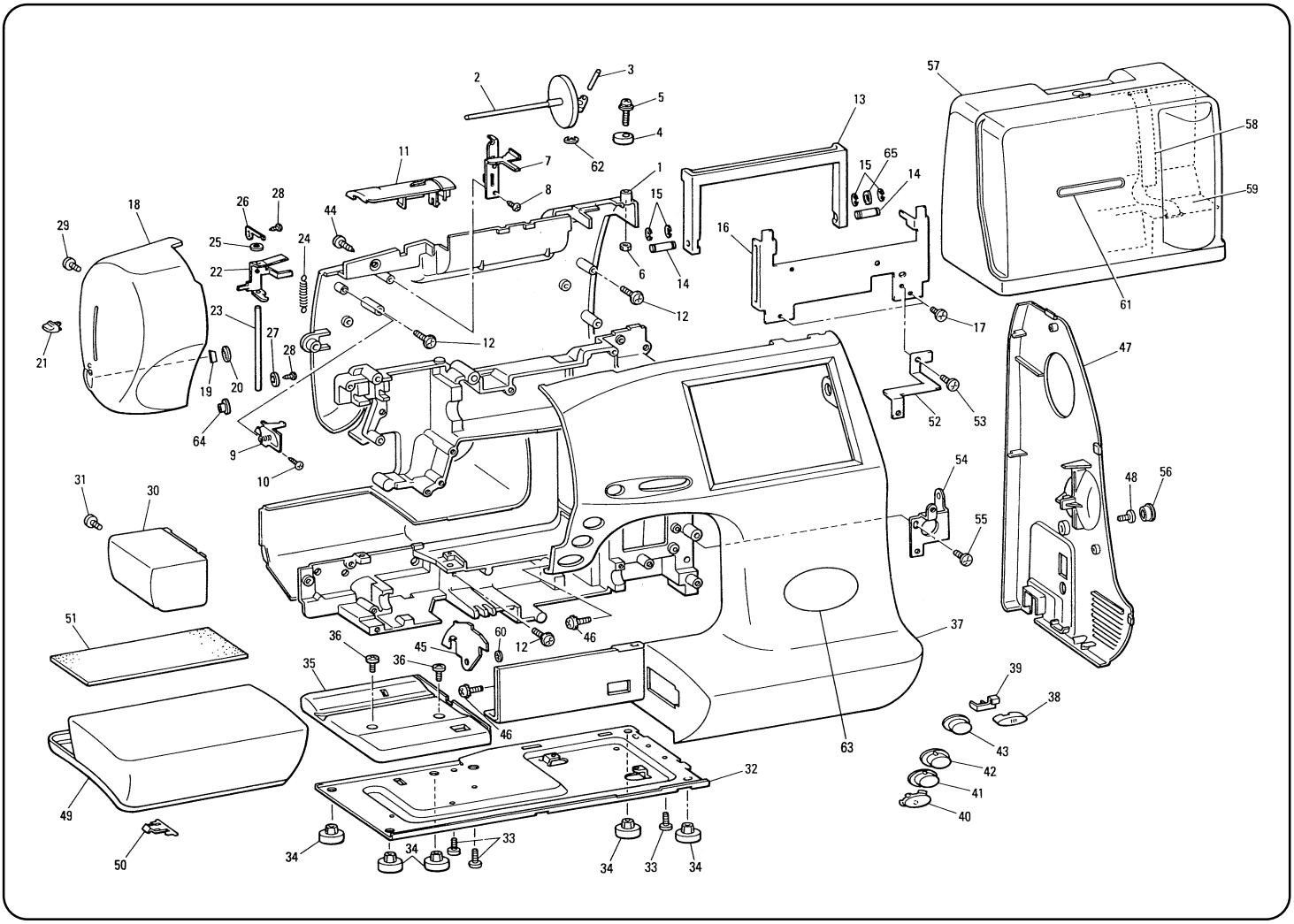
1
2
3
4
5
6
7
8
9
10
11
12
13
14
15
16
17
18
19
20
21
22
23
24
25
26
27
28
29
30
31
32
33
34
35
36
37
38
39
40
41
42
43
44
45
46
47
48
49
50
51
52
53
54
55
56
57
58
59
60
61
62
63
64
65

(2) UPPER SHAFT AND NEEDLE BAR

Ref-No.	Parts No.	Parts Name	Remarks
1	XA1824101	Upper shaft assembly	CHG
2	X52478001	Presser plate A	
3	X57908051	Screw S4 × 10	
4	X53125001	Timing belt 176 X L031	
5	XA1830051	Tension pulley assembly	
6	138172001	Screw 4 × 10DA	
7	XA1832001	NP board assembly	
8	533777001	Screw 4 × 8DB	
9	XA2198051	Needle bar supporter assembly	
10	XA1839051	Needle threader shaft assembly	
11	129839001	Spring	
12	XA1841001	Needle threader slider	
13	XA1842051	Needle bar supporter stud A	
14	X56551050	Needle bar supporter stud C	CHG
15	014400432	Screw 4 × 4	
16	XA1843150	Set plate	
17	060300616	Screw 3 × 6	
18	XA1844151	Needle release lever assembly	CHG
19	XA1847051	Needle release lever shaft	
20	048025346	Stop ring E2.5	
21	XA1848051	Spring	
22	0A2300806	Screw 3 × 8B	
23	X57758051	Spring	
24	X55983150	Needle threader position setter	CHG
25	012400432	Screw 4 × 4	
26	X55984101	Needle bar block assembly	
27	012400432	Screw 4 × 4	
28	X55990001	Needle bar guide	
29	060300416	Screw 3 × 4	
30	061300516	Screw M3 × 5	
31	X55991051	Needle bar crank rod assembly	
32	X58237001	Spring	
33	XA2389051	Needle bar crank	
34	132051001	Screw 3.57L	
35	XA1849101	Needle bar assembly	CHG
36	XZ0002051	Screw	CHG
37	XA1851000	Needle bar thread guide	
38	008020316	Screw 2 × 3	
39	117914011	Needle	
40	XA1854001	Threader hook assembly	
41	014401632	Screw M4 × 16	

Ref-No.	Parts No.	Parts Name	Remarks
42	X56851051	Nut	
43	XA1856051	Spring	
44	XA1857051	Needle bar supporter stud holder	
45	XA1859051	Needle bar supporter stud	
46	X56464001	Needle bar supporter arm	
47	048025346	Stop ring E2.5	
48	XA0649051	Screw S4 × 14	
49	X57822101	Spring	
50	X58511100	Washer	
51	X50559050	Nut	
52	XA1860150	Washer	CHG
53	062301006	Screw 3 × 10	
54	XA1861051	Spring	
55	XA2115001	Needle plate	
56	X80321001	Lower thread cutter	
57	X56828151	Needle plate cover	
58	X50487001	Screw M4	
59	XA1862051	Thread take-up lever assembly	
60	XA1864050	Thread take-up lever plate	
61	008020316	Screw 2 × 3	
62	XA1865051	Thread take-up lever stud	
63	048050346	Stop ring E5	
64	XA1866001	Washer	
65	X57913051	Screw S4 × 16	CHG
66	XA1867051	Presser bar	
67	XA1868051	Presser foot lifter	
68	XA1869050	Stud for presser foot lifter	
69	X52760051	Screw 6 × 12	
70	XA1870151	Presser bar clamp assembly	CHG
71	137736051	Spring	
72	XA6935001	Spacer	CHG
73	XA0649051	Screw S4 × 14	
74	137748101	Zigzag presser foot	
75	XA1876101	Presser holder assembly for S.G 2000	
	XA4789001	Presser holder assembly for PC-8200	CHG
76	XA1882001	BH switch plate assembly	
77	XA2222001	PT holder	
78	X58035001	Cloth selecting sensor	
79	XA6493001	PT lever	CHG
80	012300632	Screw M3 × 6	
81	XA1894051	Spring	

2

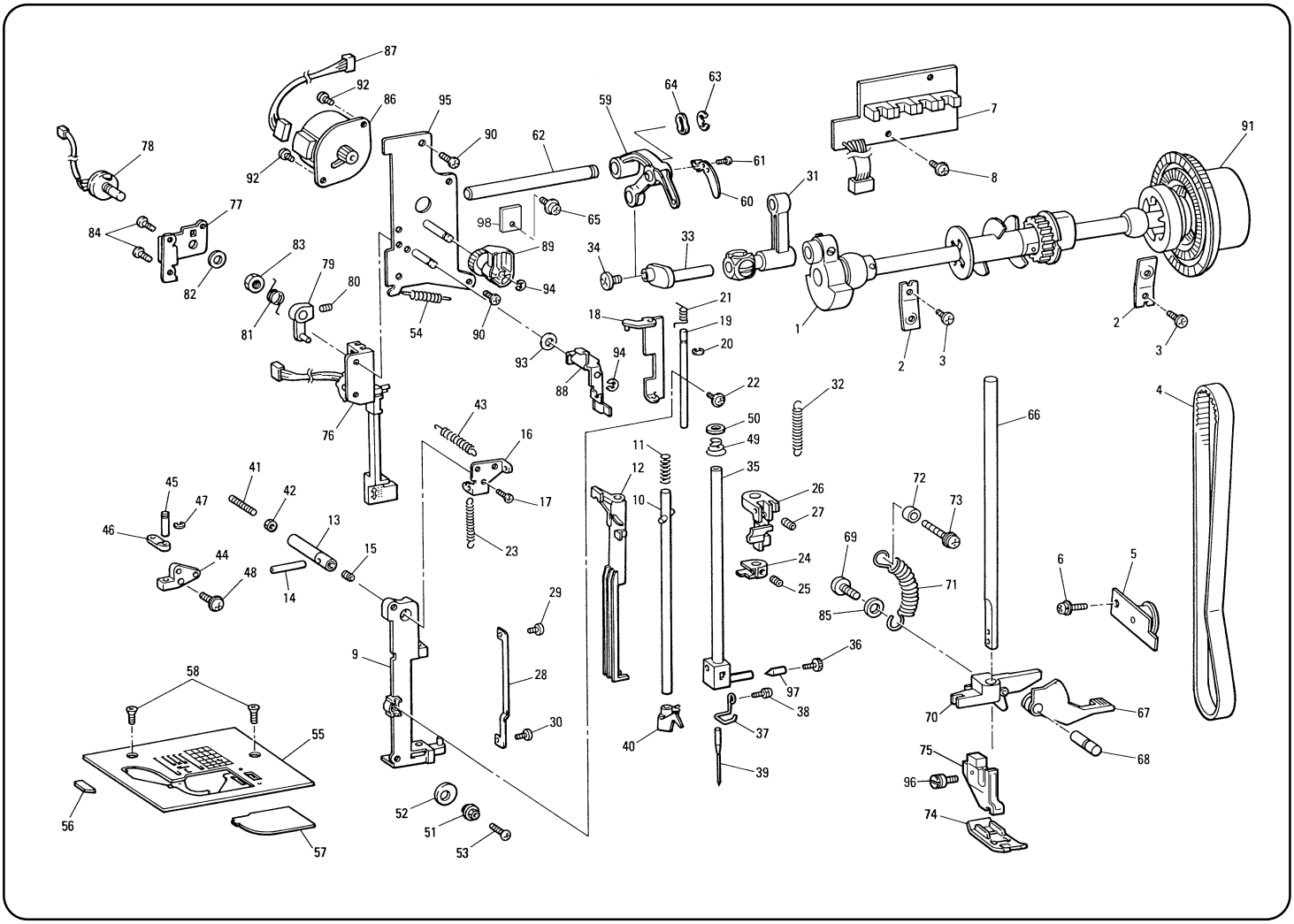
87
92
86
95
90
62
59
64
63
7
91
78
92
61
8
31
77
84
98
65
60
83
89
34
33
79
80
94
82
81
54
90
21
18
19
1
2
3
2
3
93
94
20
88
22
32
4
76
43
16
50
49
66
11
35
41
12
26
72
45
42
17
10
27
73
47
13
23
69
46
15
24
6
5
44
48
14
25
71
29
85
9
36
58
28
97
38
70
67
55
30
37
40
68
75
39
96
52
74
56
51
57
53

(2) UPPER SHAFT AND NEEDLE BAR

Ref-No.	Parts No.	Parts Name	Remarks
82	026060235	Washer M6	
83	X52569001	Nut #1	
84	060300816	Screw M3 × 8	
85	U82249001	Washer	
86	Z26291001	BP483523LM26ZPM	
87	XA2050001	ZPM lead wire assembly	
88	XA2866101	Zigzag lever	
89	XA1995000	Zigzag cam	
90	X57908051	Screw S4 × 10	
91	X59879051	Balance wheel	
92	060300416	Screw 3 × 4	
93	X53027000	Washer	
94	048030346	Stop ring E3	
95	XA1989151	ZPM holder assembly	
96	XA5904051	Screw 3.57	ADD
97	XA6035001	Needle clamp pin	ADD
98	X50532001	Presser plate	ADD

2

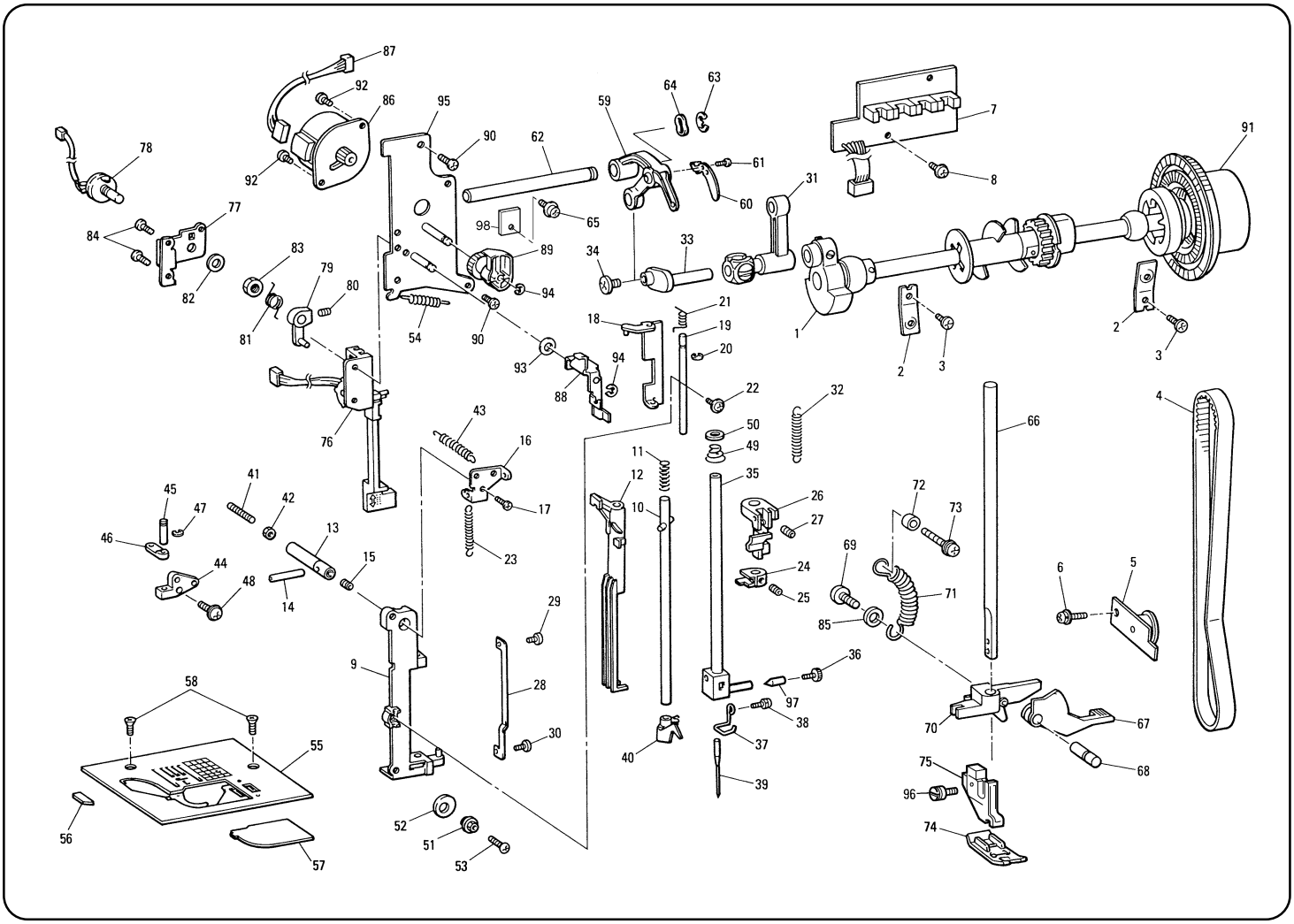
87
92
86
95
90
62
59
64
63
7
91
78
92
61
8
31
77
84
98
65
60
83
89
34
33
79
80
94
82
81
54
90
21
18
19
1
2
3
2
3
93
94
20
88
22
32
4
76
43
16
50
49
66
11
35
12
41
45
42
17
10
26
72
73
47
27
46
13
23
69
44
15
24
6
5
48
14
25
71
29
85
9
36
58
28
97
38
70
67
55
30
37
40
68
75
39
96
56
52
74
51
57
53

(3) FEED MECHANISM

Ref-No.	Parts No.	Parts Name	Remarks
1	XA1895051	Feed rod assembly	
2	XA2185050	Feed rod supporting plate	
3	XA1898001	Spring F	
4	XA1899001	Spring S	
5	XA1901250	Horizontal feed shaft	CHG
6	XA1902051	Horizontal feed arm assembly	
7	014500532	Screw 5 × 5	
8	048060346	Stop ring E6	
9	X59915051	Washer	
10	048050346	Stop ring E5	
11	XA1905051	Horizontal feed plate	
12	060400816	Screw 4 × 8	
13	XA1907051	Feed bar	
14	XA1909001	Feed dog	
15	060300616	Screw 3 × 6	
16	XA1910051	Feed bar shaft	
17	048025346	Stop ring E2.5	
18	014400432	Screw 4 × 4	
19	132420000	Horizontal feed shaft bushing	
20	132421001	Bushing presser	
21	X57908051	Screw S4 × 10	
22	XA1911051	Spring	
23	XA1912050	Horizontal-feed shaft supporter	
24	052401406	Screw 4 × 14	
25	XA1913051	Drop plate	
26	XA1914051	Drop knob	
27	XA2199051	Spring	
28	XA2200050	Spring	
29	XA1916050	FPM holder A	
30	XA1917050	FPM holder B	
31	Z26303001	BP483523LM28FPM	
32	XA2046001	FPM lead wire assembly	
33	060300416	Screw 3 × 4	
34	0A4400806	Screw 4 × 8DA	
35	XA1920151	Feed adjusting assembly	
36	XA1922151	F gear	
37	XA2972001	Spring	
38	X53330000	Washer	CHG
39	XA1924050	Feed adjusting shaft	
40	048050346	Stop ring E5	
41	X59915051	Washer	

Ref-No.	Parts No.	Parts Name	Remarks
42	XA2189050	Rubber	
43	XA0649051	Screw S4 × 14	
44	XA1927051	Feed regulator slide block	
45	X57908051	Screw S4 × 10	
46	XA1929051	SPM holder assembly	
47	XA1932051	Side feed plate	
48	XA1933051	Side feed supporting plate	
49	XA2972001	Spring	
50	048040346	Stop ring E4	
51	Z26306001	BP483523LM29SPM	
52	XA2047001	SPM lead wire assembly	
53	060300416	Screw 3 × 4	
54	XA2189050	Rubber	
55	XA2192050	Side feed spacer	
56	052300606	Screw 3 × 6	
57	X57908051	Screw S4 × 10	
58	XA1935051	Spring	
59	X59916051	Screw	CHG
60	012400432	Screw 4 × 4	
61	137977000	Washer	

3

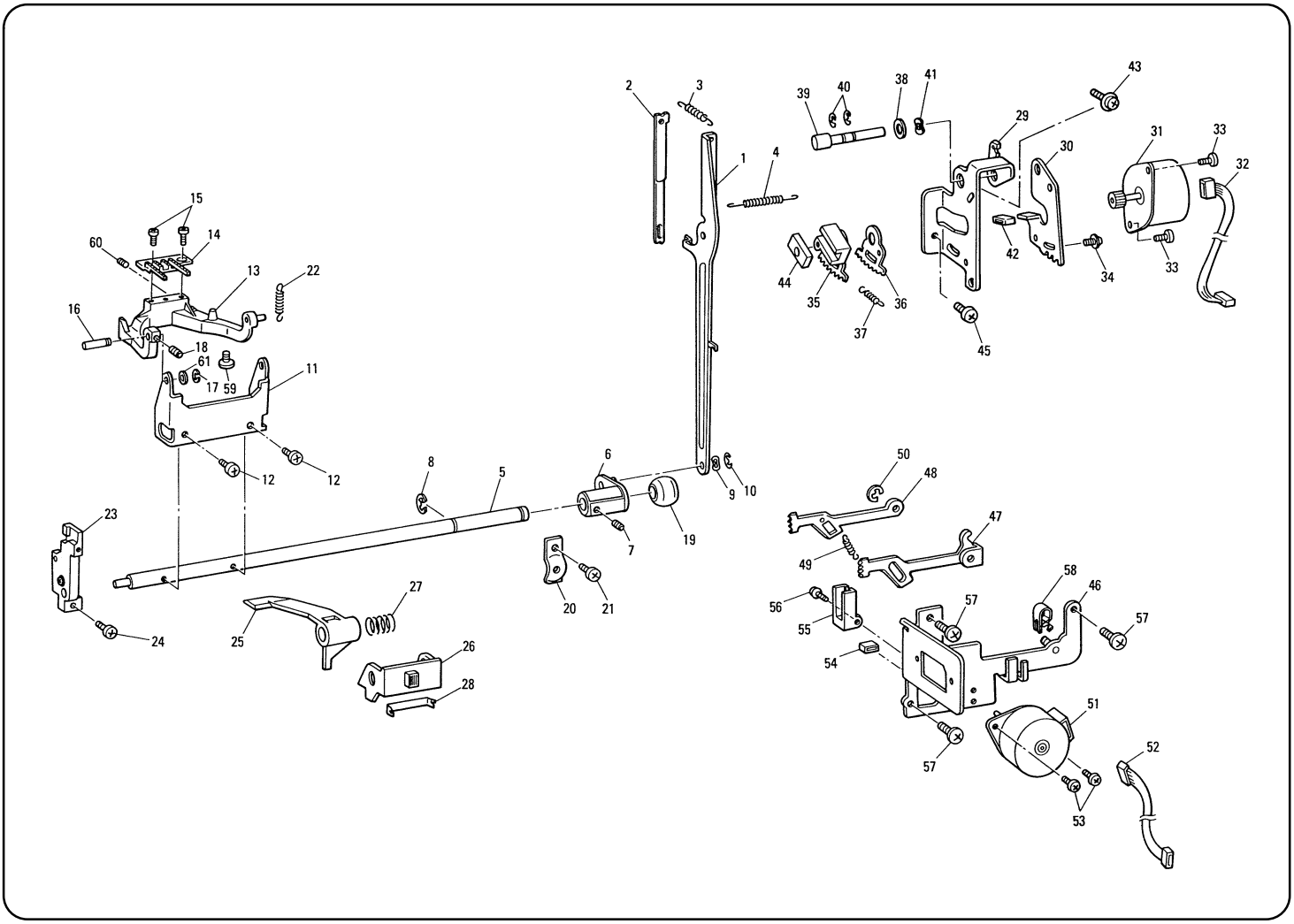
1
2
3
4
5
6
7
8
9
10
11
12
12
13
14
15
16
17
18
19
20
21
22
23
24
25
26
27
28
29
30
31
32
33
33
34
35
36
37
38
39
40
41
42
43
44
45
46
47
48
49
50
51
52
53
54
55
56
57
57
57
58
59
60
61

(4) ROTARY HOOK, THREAD GUIDE AND THREAD CUTTING <B985>

Ref-No.	Parts No.	Parts Name	Remarks
1	XA1936251	Thread cutting assembly	
2	XA2848151	Movable blade assembly	
3	X56133001	Fixed blade	
4	XA1962051	Lower-thread guide arm assembly	
5	060400816	Screw 4 × 8	
6	060300516	Screw 3 × 5	
7	XA1968101	Lower shaft assembly	
8	132421001	Bushing presser R	
9	XA1975051	Bushing presser L	
10	X57908051	Screw S4 × 10	
11	XA2855101	Outer rotary hook assembly	CHG
12	XA1976101	Inner rotary hook bracket assembly	CHG
13	060400816	Screw 4 × 8	
14	X57177401	Inner rotary hook assembly	CHG
15	XA0360051	Outer rotary hook shaft	CHG
16	XA2190000	Washer U	
17	XA2190000	Washer U	CHG
18	XA0362001	Washer	
19	014401632	Screw M4 × 16	
20	XA1980001	Photo diode assembly	
21	060020416	Screw M2 × 4	
22	XA1984101	Photo transistor assembly	CHG
23	052300606	Screw 3 × 6	
24	146200001	Stop ring CS4	
25	XA1928001	Bobbin winder assembly	
26	XA2003001	Bobbin winder switch assembly	
27	062260516	Screw 2.6 × 5	
28	X57908051	Screw S4 × 10	
29	XA2006151	Thread guard plate assembly	
30	XA3066051	Roller supporting arm assembly	
31	XA5532000	Metallic AT roller	CHG
32	048025346	Stop ring E2.5	
33	Z26300001	BP483523LM27ATP	
34	XA2053001	ATPM lead wire assembly	
35	060300816	Screw M3 × 8	
36	048030346	Stop ring E3	
37	XA2019051	Spring	
38	XA2853101	Thread winder cover	CHG
39	XA2022001	Spring	
40	052300606	Screw 3 × 6	
41	XA2027001	Sensor board assembly	

Ref-No.	Parts No.	Parts Name	Remarks
42	XA2031051	Sensor board holder	
43	052300606	Screw 3 × 6	
44	136681001	Screw B3 × 8	
45	XA2032051	Thread guard holder	
46	XA2035050	Thread guard	
47	048030346	Stop ring E3	
48	060300616	Screw 3 × 6	
49	X55260002	Spool presser C	
50	XA2935051	Thread guide plate	
51	060300616	Screw 3 × 6	
52	XA2194051	Tension releaser assembly	
53	XA2197051	Tension release wire	
54	048030346	Stop ring E3	
55	XA2021002	Thread guard cover	
56	XA2953051	Thread guard	
57	XA2223050	Thread guard wire	
58	XA2025050	Thread guide wire	
59	085311415	Screw B3 × 14	
60	XA2024050	Thread cutting shutter	
61	XA2023051	Washer	
62	136681001	Screw B3 × 8	
63	XA2867000	Rubber	
64	X57908051	Screw S4 × 10	
65	XA3842051	Presser plate	CHG
66	XA5533000	AT roller	ADD
67	137999000	Washer	ADD
68	XA5534000	AT roller wheel	ADD

4

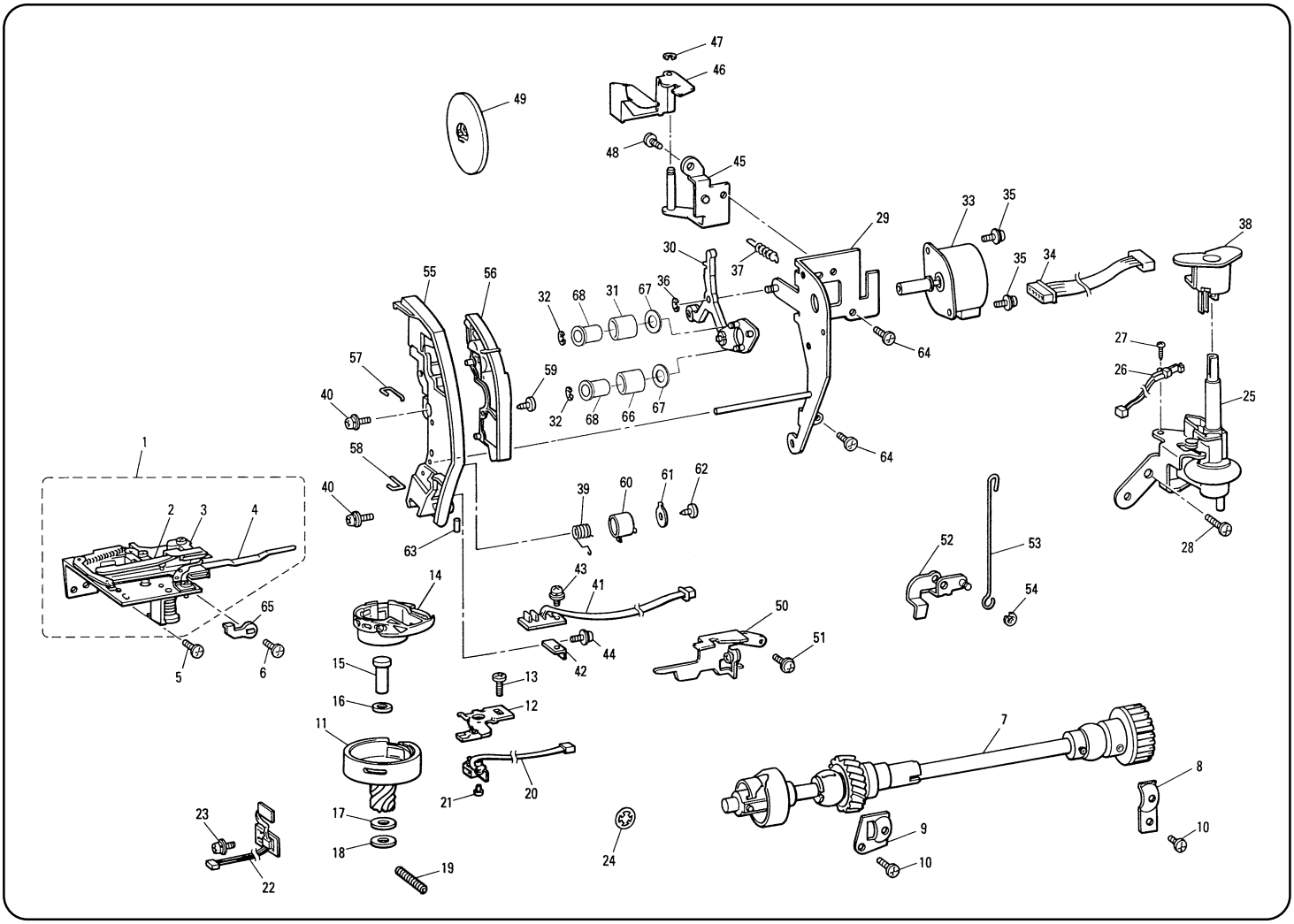
47
46
49
48
45
29
33
35
38
30
37
35
34
55
56
36
32
68
31
67
64
27
57
59
26
40
32
68
66
67
25
1
58
64
40
39
60
61
62
2
3
4
63
52
53
28
14
43
41
54
65
50
44
51
5
6
42
15
13
16
12
11
7
8
21
20
23
17
9
10
18
24
10
19
22

(5) LAMP, MAIN PC BOARD ASSEMBLY AND MOTOR UNIT <B985>

Ref-No.	Parts No.	Parts Name	Remarks
1	XA2037001	WB sew-light bulb	
2	XA2038001	WBL socket assembly	
3	002261205	Screw 2.6 × 12	
4	XA2040051	Lamp holder	
5	060300416	Screw 3 × 4	
6	X81010201 (old) X81037001 (new)	Main PC board assembly for U.S.A and CANADA	
	X81011201 (old) X81038001 (new)	Main PC board assembly for IRELAND, GERMANY, BELGIUM, U.K, FRANCE, NORWAY, NETHERLANDS, AUSTRIA, GREECE, SWEDEN, SPAIN, PORTUGAL, ITARY, FINLAND, SWITZERLAND, DENMARK, GIBRALTAR, ICELAND, MALTA, MONACO, AUSTRALIA, NEW ZEALAND and SOUTH AFRICA	
	X81049001 (new)	Main PC board assembly for KOREA	
	X81012201 (old) X81039001 (new)	Main PC board assembly for other countries	
7	052300606	Screw 3 × 6	
8	X80938101	Power supply unit assembly for 120V	CHG
	X80939101	Power supply unit assembly for 230V	CHG
9	U32809001	Fuse ULTSC 3.15A for 120V	
	X56549001	G fuse 5AB for 230V	
10	X55397001	G fuse 3.15AA for 120V	
	XA0069001	G fuse 2AT-S for 230V	
11	XA2075001	Pin jack assembly for 120V	
	XA3241001	Pin jack assembly for 230V	
12	X51271001	Jack nut	
13	0A5402505	Screw 4 × 25DB	CHG
14	XA3216001	LCD unit assembly for PC-8200	
	XA3237001	LCD unit assembly for S.G 2000 ,CANA	CHG
15	XA2220050	Board presser	
16	U06923002	Screw B3 × 10	
17	XA2094001	Inverter	
18	XA2097001	Lead wire assembly	
19	XA3220101	Inlet assembly for 120V	CHG
	XA3229101	Inlet assembly for 230V	CHG
20	060400616	Screw M4 × 6	
21	X56302001	Connector 176496	

Ref-No.	Parts No.	Parts Name	Remarks
22	XA2096001	Lead wire assembly for 120V	
	XA3244001	Lead wire assembly for 230V	
23	048025346	Stop ring E2.5	
24	XA2225150	Inverter cover	CHG
25	060300616	Screw 3 × 6	
26	XA1826001	Timing belt B173 XXL6.4	
27	537235001	Screw 5 × 12DB	
28	XA3332151	MM-512-21 motor unit for 120V	CHG
	XA3356151	MM-512-51 motor unit for 230V	CHG
29	XA2815051	Power supply cord for UL, CSA	
	XA0070051	Power supply cord for Europe	
	X59328051	Power supply for SAA	
	X57079001	Power supply for U.K	
30	XA7290051	FC-308-81 controller	CHG
31	XA2084001	SSVR board assembly	
32	X57005000	Washer 3	
33	136681001	Screw B3 × 8	
34	124240001	Band	

NOTE:

old ~G7XXXXXXX ('97. JUL. PRODUCTION)

new H70111101~ ('97. AUG. PRODUCTION)

5

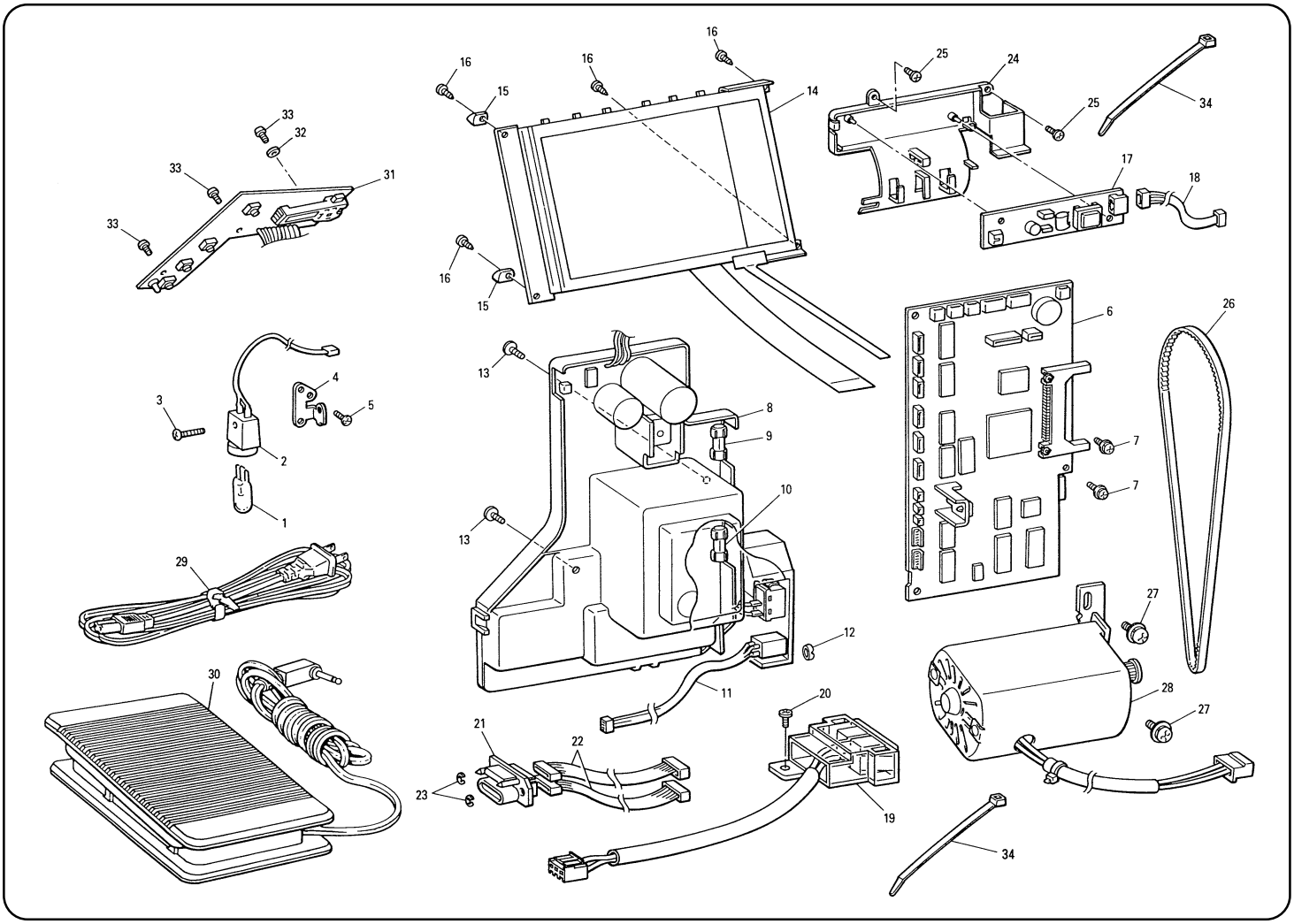

16
16
16
15
14
25
24
25
34
33
32
33
31
33
17
18
16
15
6
26
13
4
3
5
8
9
2
7
7
10
1
13
29
27
12
30
11
20
28
27
21
22
23
19
34

(6) ACCESSORY <B985>

Ref-No.	Parts No.	Parts Name	Remarks
1	XA2159101	Embroidery foot assembly for S.G2000	CHG
	XA5500001	Embroidery foot assembly for PC-8200	ADD
2	X51162001	Overcasting stitch-foot	
3	X59370051	Zipper foot	
4	X56409001	Blind stitch foot	
5	X57789101	Button hole foot	
6	X53840301	Monogramming foot	CHG
7	XA3811051	Bobbin for PC-8200	
	XA3812051	Bobbin for S.G 2000	
8	X54243001	Seam ripper	
9	130489001	Button fitting foot	
10	X58358001	Z needle set	
11	184783001	Scissors	
12	184944001	Chalk pen	
13	XA4527001	Cleaning brush	
14	135793001	Eyelet punch	
15	XA2005051	Needle plate fixing metal	
16	X55467051	Screw driver M	
17	X55468051	Screw driver S	
18	130012003	Spool cap A	
19	130013003	Spool cap B	
20	XA3336051	Spool pin	
21	X59296001	Twin needle set	
22	127610000	Net	
23	X57045001	Felt	
24	128369003	Accessory bag	
25	XA3250101	Pattern sheet (old)	
	XA4595001	Pattern sheet (new)	
26	X80902002	Embroidery frame L for S.G 2000	
	X80902003	Embroidery frame L for PC-8200	
27	X80903002	Embroidery frame M for S.G 2000	
	X80903003	Embroidery frame M for PC-8200	
28	X80904102	Embroidery frame S for S.G 2000	
	X80904103	Embroidery frame S for PC-8200	
29	XA4813-051	Screw 3.57	
30	X80948001	Grid sheet set for S.G 2000	
	X80948002	Grid sheet set for PC-8200	
31	X80914001	Backing material for S.G 2000	
	X80914002	Backing material for PC-8200	
32	X80943001	Side cutter	
33	X81064001	Walking foot	CHG

Ref-No.	Parts No.	Parts Name	Remarks
34	X61153001	986 SF assembly	ADD
35	XA5904051	Screw 3.57	ADD
36	XA6023001	Presser adaptor	ADD

NOTE:

old ~G7XXXXXXX ('97. JUL. PRODUCTION)

new H70111101~ ('97. AUG. PRODUCTION)

6

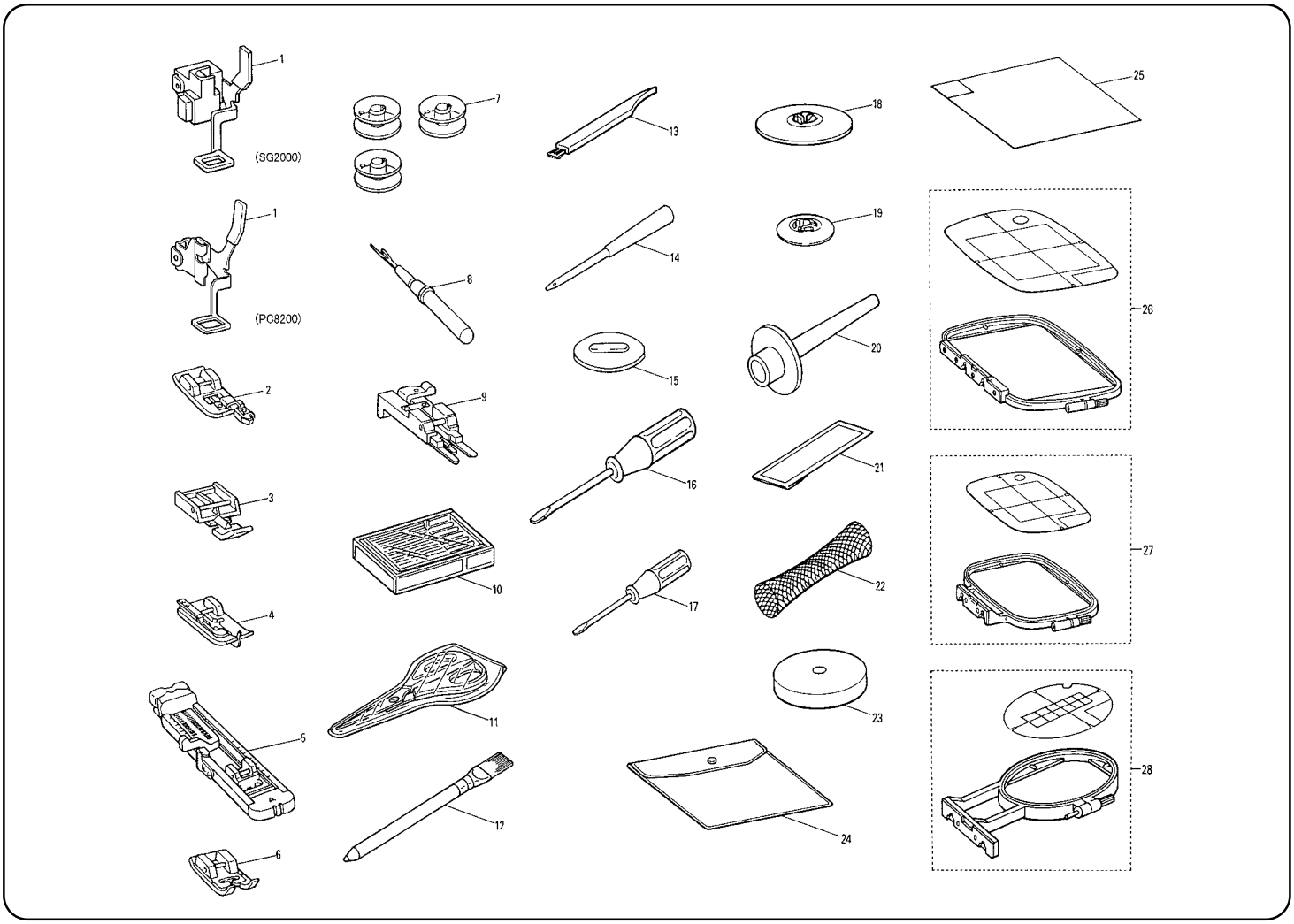
1
(SG2000)
1
(PC8200)
2
3
4
5
6
7
8
9
10
11
12
13
14
15
16
17
18
19
20
21
22
23
24
25
26
27
28

(7) EMBROIDERY UNIT <B985>

Ref-No.	Parts No.	Parts Name	Remarks
1	XA2119101	Main frame assembly	
2	XA2122050	X driving gear pulley	
3	048040346	Stop ring E4	
4	X53838001	Washer	
5	Z26309001	BP483523LM30XPM	
6	052300606	Screw	
7	XA2123001	Timing belt 60S2M494	
8	XA2124051	X tension pulley assembly	
9	052300606	Screw 3 × 6	
10	052400806	Screw 4 × 8	
11	XA2128001	X guide shaft	
12	052400806	Screw 4 × 8	
13	XA2129101	X carriage assembly	
14	XA2133050	Gear	
15	048020346	Stop ring E2	
16	XA2134050	Y driving gear pulley	
17	025060235	Washer M6	
18	048040346	Stop ring E4	
19	X53838001	Washer	
20	XA4454001	Y carriage assembly	
21	XA2189050	Rubber	
22	XA4496100	Notched spring	CHG
23	060300416	Screw 3 × 4	
24	XA4710000	Y slider	
25	052300606	Screw 3 × 6	
26	XA2123001	Timing belt 60S2M494	
27	XA2137051	Y tension pulley assembly	
28	XA2127050	Tension pulley	
29	025060235	Washer M6	
30	048040346	Stop ring E4	
31	052300606	Screw 3 × 6	
32	XA2139051	Y guide shaft	
33	048040346	Stop ring	
34	103810002	Washer	
35	XA2140101	X carriage supporter assembly	
36	XA2142050	Rubber	
37	XA2143150	X slider	CHG
38	052400806	Screw 4 × 8	
39	XA2144150	X belt presser	
40	052400806	Screw 4 × 8	
41	Z26312001	BP483523LM31YPM	

Ref-No.	Parts No.	Parts Name	Remarks
42	575039003	Screw 3 × 5DA	
43	060400616	Screw M4 × 6	
44	052300606	Screw 3 × 6	
45	XA2148001 (old) XA4449001 (new)	XPM lead wire assembly	
46	XA2868001 (old) XA4460001 (new)	YPM lead wire assembly	
47	X56302001	Connector 176496	
48	037421616	Screw 4 × 16	
49	XA2150003	X carriage cover	
50	052400806	Screw 4 × 8	
51	XA2151001	ES main cover	
52	087411415	Screw B4 × 14	
53	XA2153101	ES side cover	
54	087411415	Screw B4 × 14	
55	XA2154101	ES base cover	
56	130157001	Rubber cushion	
57	XA2155050	Lock lever	
58	XA0814001	Shaft	
59	XA2157051	Spring	
60	136681001	Screw B3 × 8	
61	025030336	Washer L3	
62	XA2158051	Lock release button	
63	XA2863001	ES spacer	
64	XA4456001	Y shutter	
65	060300416	Screw 3 × 4	
66	XA4457000	Cord guide	
67	XA4458001	X sensor PC board holder	
68	060300416	Screw 3 × 4	
69	XA4459001	X shutter	
70	060400616	Screw M4 × 6	
71	XA4447001	X sensor PC board assembly	
72	052300606	Screw 3 × 6	
73	XA4451001	Y sensor PC board assembly	
74	060020416	Screw 2 × 4	
75	137947001	Clip	
76	XA4596001	Oil guard plate	

NOTE:

old ~G7XXXXXXX ('97. JUL. PRODUCTION)

new H70111101~ ('97. AUG. PRODUCTION)

7

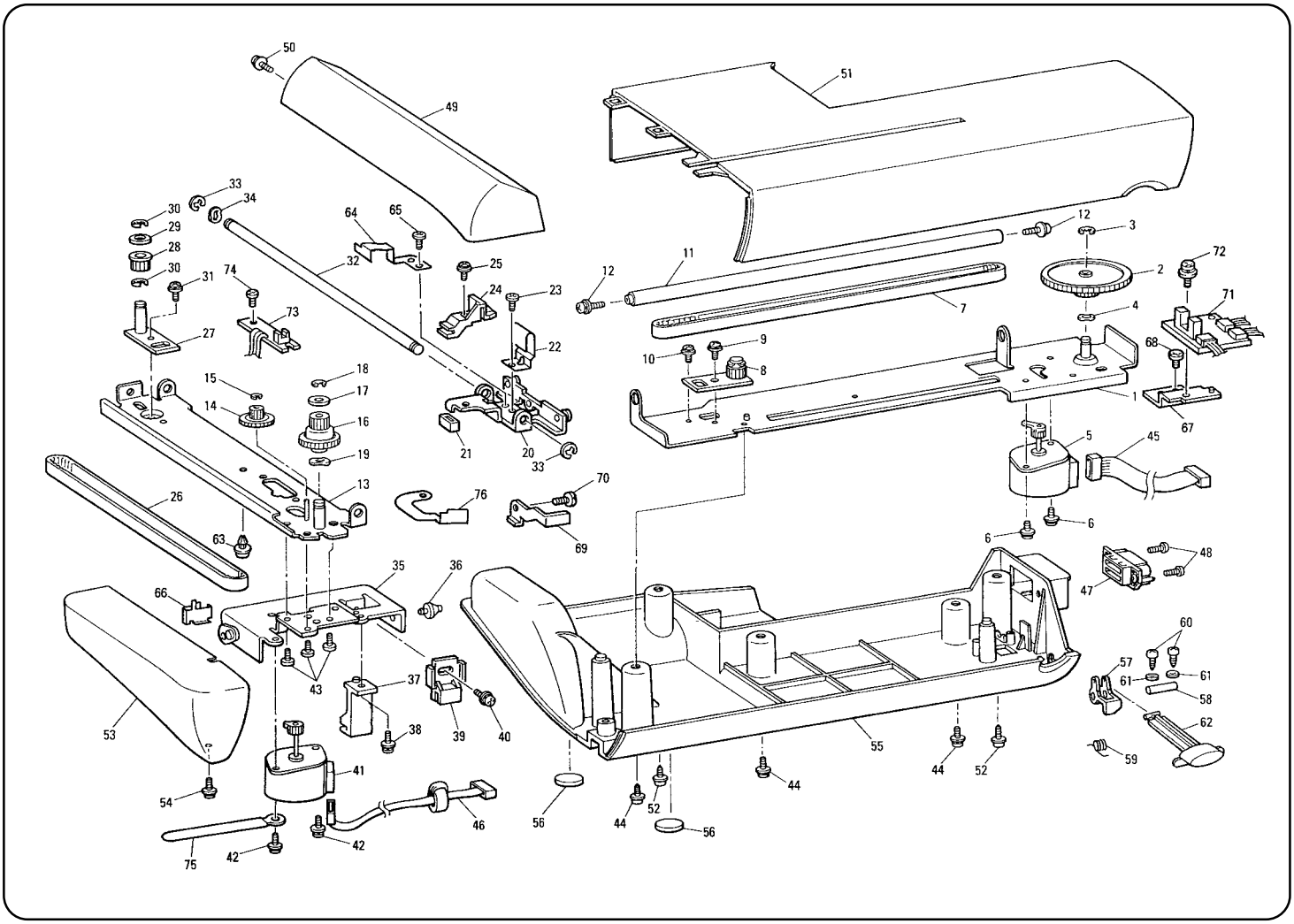
50
49
51
33
34
30
29
28
30
31
74
73
27
64
65
32
25
24
23
22
12
11
7
12
3
2
72
71
4
68
67
1
9
10
8
15
14
18
17
16
19
13
21
20
33
70
76
69
26
63
5
45
6
6
48
47
35
36
66
43
37
38
39
40
53
41
54
42
42
46
75
56
44
52
56
44
55
44
52
60
57
61
61
58
62
59

PC-8200
S.G. 2000
H7070095