PARTS CATALOGUE FOR

COMPUTERIZED SEWING MACHINE

NC21-S2, S3 Model

CS8000 Series
CS8100 Series

5. 2003.
1. 2004.

CONTENTS

(1) PRINCIPAL PARTS 2

(2) UPPER SHAFT / NEEDLE BAR, PRESSER MECHANISM 6

(3) FEED, ROTARY HOOK / ROTARY HOOK DRIVE MECHANISM 8

(4) BOBBIN WINDER MECHANISM 10

(5) THREAD GUIDE MECHANISM 12

(6) THREAD HOOK MECHANISM 14

(7) ELECTRONIC PARTS / MOTOR UNIT 16

(8) ATTACHMENTS / PACKING MATERIALS / PRINTED MATTER 18

NEEDLE-PRESSER MODULE 24

FEED MODULE 26

(1) PRINCIPAL PARTS

No.	CODE	NAME	REMARKS
1	XC3469021	BASE COVER B	
2	XC3470021	BASE PLATE B	
3	XC3471021	ADJUSTING SCREW	
4	XC3472021	BASE PLATE RUBBER	
5	085310815	TAPTITE, BIND B M3 × 8	
6	060401216	SCREW 4 × 12	
7	XC4077021	BASE PLATE RUBBER	CHG
8	XC5265022	BOBBIN WINDER COVER ASSY	
9	XC3473021	BOBBIN WINDER COVER	
10	XC5266021	THREAD GUIDE SEAL	
11	XC4062021	BOBBIN WINDER COVER SUPPORTER	
12	XC3675021	THREAD TENSION PLATE	
13	085310815	TAPTITE, BIND B M3 × 8	
14	XC3676021	THREAD TENSION ASSY	
15	0A4300605	SCREW, PAN (S/P WASHER) M3 × 6	
16	XC4212021	THREAD TENSION COVER	
17	XC4574021	THREAD TENSION COVER SEAL	
18	XC6282021	BOBBIN WINDER COVER LABEL	
19	XC3475020	SHAFT FOR BOBBIN WINDER COVER	
20	XC3476021	HANDLE	
21	XC3477021	HANDLE FIXED PLATE	
22	085311215	SCREW, BIND B TITE 3 × 12	CHG
23	X80321001	NT LOWER THREAD CUTTER	
24	XC3478021	CUTTER COVER	
25	XC3479021	ADJUSTING PLATE	
26	XC3480021	PLATE SPRING	
27	XC4053021	ADJUSTING SCREW	
28	XC5161021	GIZA TITE M4 × 10	CHG
29	XC3854021	LEAD WIRE GUIDE	
30	XC4575021	BOBBIN WINDER SEAL	
31	085310815	TAPTITE, BIND B M3 × 8	
32	XC4806020	ARM CAP	
33	XC6043021	FRONT COVER SUPPLY ASSY (CS8060 : EUROPE)	CHG
	XC6043022	FRONT COVER SUPPLY ASSY (CS8070)	
	XC6043024	FRONT COVER SUPPLY ASSY (CS8060 : U.S.A & CANADA)	CHG
	XC6045021	FRONT COVER SUPPLY ASSY (CS8120)	
	XC6045022	FRONT COVER SUPPLY ASSY (CS8130)	
	XC6046021	FRONT COVER SUPPLY ASSY (CS8150)	
34	XC4077021	BASE PLATE RUBBER	CHG
35	XC3493021	BASE COVER A	
36	XC3494021	BASE PLATE A	
37	085310815	TAPTITE, BIND B M3 × 8	

No.	CODE	NAME	REMARKS
38	XC4302021	RUBBER CUSHION PLINTH	
39	XC4077021	BASE PLATE RUBBER	CHG
40	085311015	SCREW, BIND B TITE 3 × 10	
41	XC3495021	BASE COVER WASHER	
42	XC3496021	GIZA TITE 5 × 16	CHG
43	XC3497021	FRONT COVER FOR CASSETTE	
44	XC3498021	CASSETTE COVER	
45	XC3499021	COVER LINK PLATE ASSY	
46	XC3502020	LINK HOLD PLATE	
47	XC4730121	PCB UNIT:LED LAMP-SR (CS8000)	CHG
	XC5296021	PCB UNIT:LED LAMP-S3R (CS8100)	
48	XC3506021	LED LAMP HOLDER R	
49	XC3710021	LED COVER	
50	XC5304021	CASSETTE CAUTION SEAL	
		CS8000 (#51~#56)	
51	XC5220021	7-LED COVER (CS8000)	
52	XC6341021	OPERATION PCB S2 ASSEMBLY	
53	XC5221021	VR HOLDER (CS8000)	
54	XC5222021	SV KEY TOP (CS8000)	
55	XC5223021	SW BUTTON (CS8000)	
56	085310815	TAPTITE, BIND B M3 × 8 (CS8000)	
		CS8100 (#51~#56)	
51	XC6328021	SINGLE LIGHT GUIDE SUPPLY ASSY	
52	XC5384020	PCB HOLD PLATE (CS8100)	
53	XC6344021	OPERATION PCB S3 ASSEMBLY	
54	XC5128021	RUBBER KEY (CS8120)	CHG
	XC5128022	RUBBER KEY (CS8130)	ADD
	XC5128023	RUBBER KEY (CS8150)	ADD
55	XC5383021	RUBBER KEY HOLDER (CS8100)	
56	085310815	TAPTITE, BIND B M3 × 8 (CS8100)	
57	XC4754021	PCB COVER	
58	XC5469021	FRONT COVER HOLDER	
59	XC6363021	BOARD PRESSER	CHG
60	085311015	SCREW, BIND B TITE 3 × 10	
61	085311215	TAPTITE, BIND B M3 × 12	
62	XC3507022	SS BUTTON	
63	XC3508021	BACKSTITCHING BUTTON	
64	XC3509021	NP BUTTON	
65	XC3511021	SV KEY TOP	
66	XC3513021	BOBBIN WINDER PLATE	
67	XC3514021	BOBBIN PRESSER	
68	0A4302506	SCREW, PAN (S/P WASHE) M3 × 25	CHG
69	021300106	NUT, 1 M3	

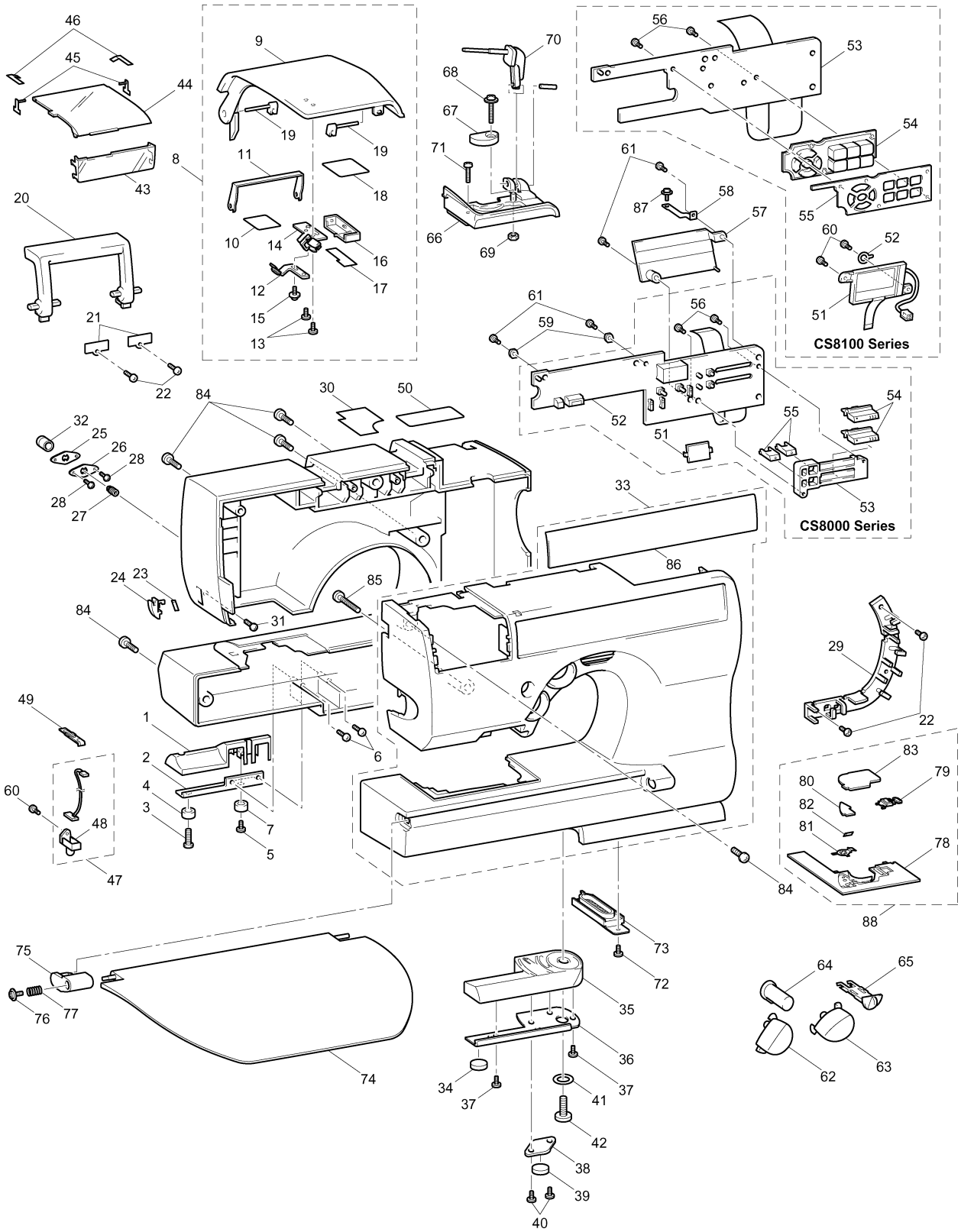
CS8100 Series
CS8000 Series

(1) PRINCIPAL PARTS

No.	CODE	NAME	REMARKS
70	XC3474021	LOWER THREAD PIN	
71	060301206	SCREW, BIND M3 × 12	
72	085310815	TAPTITE, BIND B M3 × 8	
73	XC3515021	BASE COVER	
74	XC3517022	FLAP TABLE	
75	XC3518021	TABLE BEARING	
76	087310816	TAPTITE, CUP B M3 × 8	
77	XC3519021	SPRING,COMPRESSION	
78	XC3521021	NEEDLE PLATE B	
79	XC7371021	SLIDE BUTTON	CHG
80	XC2367021	CUTTER COVER	CHG
81	XC2368021	SPRING PLATE	CHG
82	X80321001	NT LOWER THREAD CUTTER	
83	XC2369021	NEEDLE PLATE COVER	CHG
84	XC3496021	GIZA TITE 5 × 16	CHG
85	XC5401021	GIZA TITE 3 × 32	CHG
86	XC5218022	PANEL DECORATION PLATE (CS8060 for U.S.A & CANADA)	CHG
	XC5218021	PANEL DECORATION PLATE (CS8060)	
	XC5218023	PANEL DECORATION PLATE (CS8070)	
	XC5385022	DECORATION PANEL (CS8150)	
	XC5385021	DECORATION PANEL (CS8120)	
	XC5385023	DECORATION PANEL (CS8130)	
87	0A4300605	SCREW, PAN (S/P WASHER) M3 × 6	
88	XC3520021	NEEDLE PLATE B ASSY	ADD
NEW SPEC			
33	XC6043023	FRONT COVER SUPPLY ASSY(CS8080)	ADD
86	XC5218024	PANEL DECORATION PLATE (CS8080)	ADD

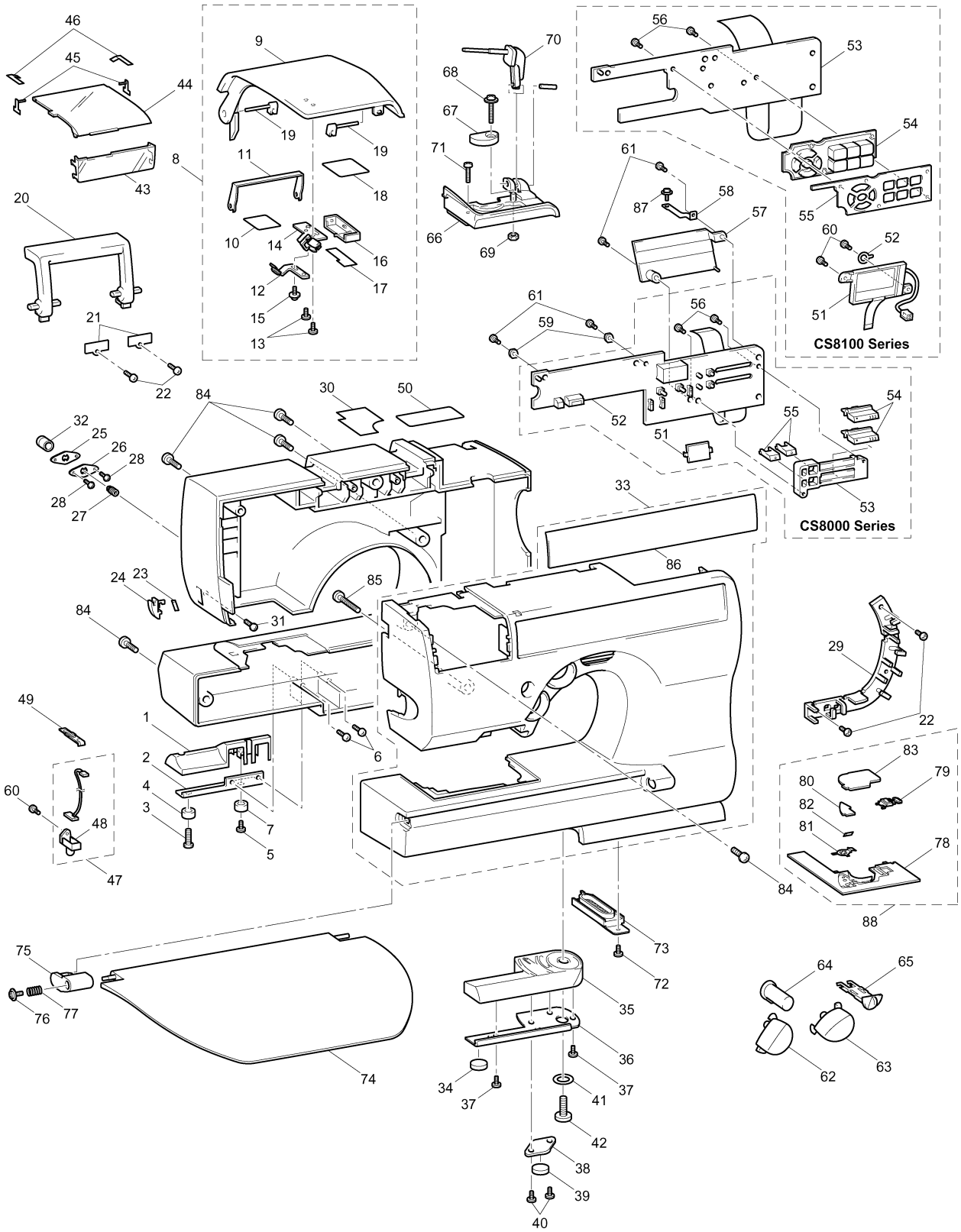
CS8100 Series
CS8000 Series

(2) UPPER SHAFT / NEEDLE BAR, PRESSER MECHANISM

No.	CODE	NAME	REMARKS
		UPPER SHAFT MECHANISM	
1	XC5436021	UPPER SHAFT SUPPLY ASSY	
2	XC3529021	PULLEY	
3	048060346	RETAINING RING, E6	
4	XC3532021	TIMING SHUTTER	
5	XC3533021	SPEED SHUTTER	
6	XC2383021	FIXED JOINT	
7	012500532	SET SCREW, SOCKET (FT) M5 × 5	
8	014400432	SET SCREW, SOCKET (CP) M4 × 4	
9	XC3534121	UPPER SHAFT BEARING PRESSER	
10	XA1899021	SPRING (CS8100)	
11	XC3496021	GIZA TITE 5 × 16	CHG
12	XC3536021	T BELT 453-3GT-6	
13	XC3537121	ASSY:NP PCB-S	CHG
14	085311015	TAPTITE, BIND B M3 × 10	
15	XC4691021	SHUTTER COVER	
16	060300416	SCREW, BIND M3 × 4	
17	XC3540021	TENSION PULLEY ASSY	
		NEEDLE BAR, PRESSER MECHANISM	
18	XC3568151	THREAD HOOK ASSY	
19	XC3573021	CASSETTE GUIDE PLATE	
20	XC3841021	PRESSER PLATE SPRING	
21	060300416	SCREW, BIND M3 × 4	
22	085310615	TAPTITE, BIND B M3 × 6	
23	XC3575021	PRESSER PLATE	
24	XC3576021	UPPER SHAFT BUSHING PRESSER	
25	XC3496021	GIZA TITE 5 × 16	CHG
26	062301205	SCREW, PAN M3 × 12	

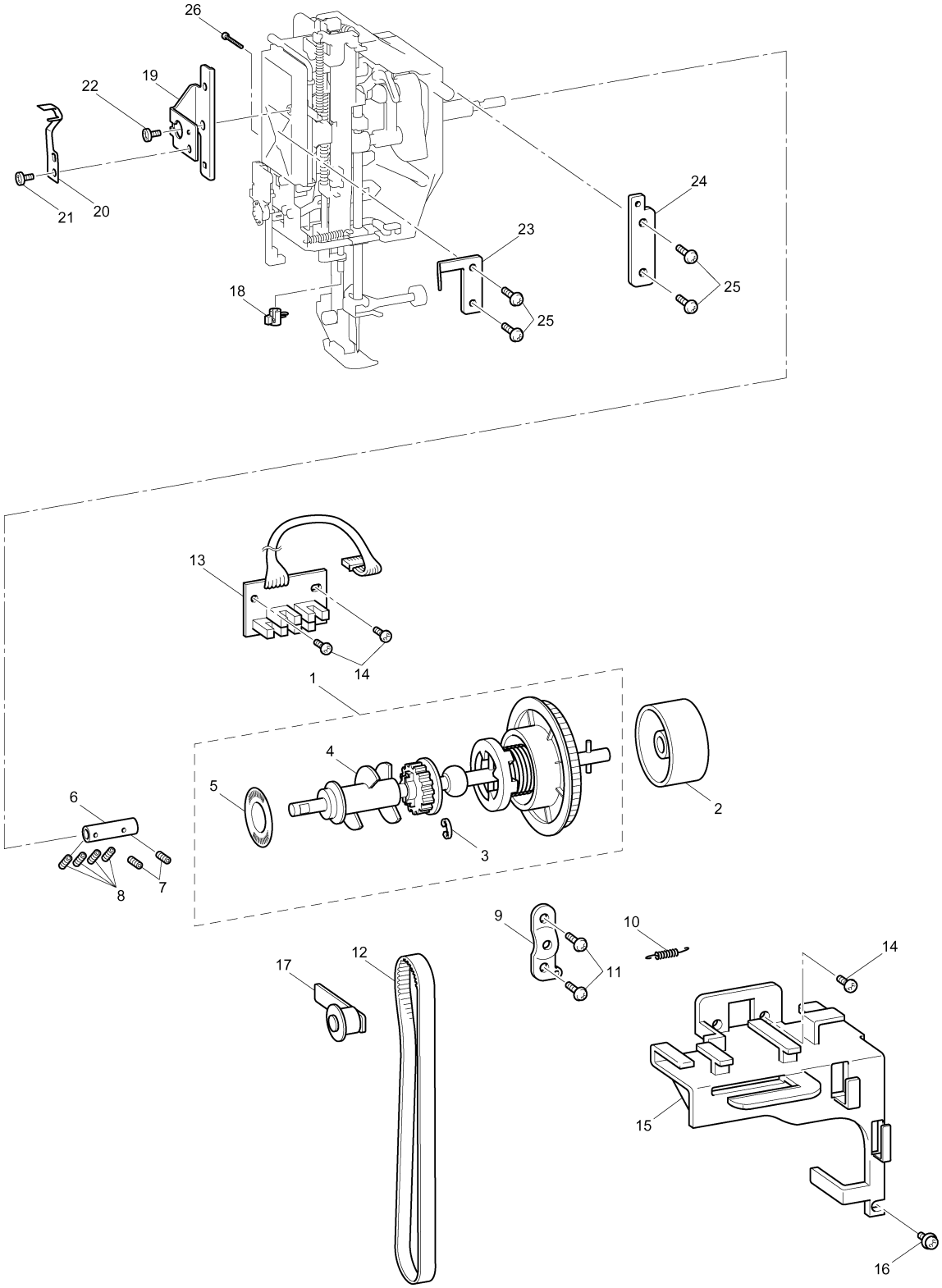
26
19
22
21
20
24
23
25
18
25
13
14
1
4
5
2
6
3
8
7
9
10
14
17
12
11
15
16

(3) FEED, ROTARY HOOK / ROTARY HOOK DRIVE MECHANISM

No.	CODE	NAME	REMARKS
		FEED, ROTARY HOOK MECHANISM	
1	XC3153051	INNER ROTARY HOOK ASSY	
2	XC4345021	GIZA TITE 4 × 14	CHG
3	X52800120	BOBBIN	
		ROTARY HOOK DRIVE MECHANISM	
4	XC3594021	LOWER SHAFT A	
5	XC3595021	TIMING PULLEY D	
6	014500532	SET SCREW, SOCKET (CP) M5 × 5	
7	XC3596021	ECCENTRIC SHAFT BUSHING	
8	X51383020	WASHER,THRUST	
9	048060346	RETAINING RING, E6	
10	137768121	SET SCREW COLLAR	
11	014400432	SET SCREW, SOCKET (CP) M4 × 4	
12	XC2602051	JOINT	
13	012500532	SET SCREW, SOCKET (FT) M5 × 5	
14	XC2602051	JOINT	
15	012500532	SET SCREW, SOCKET (FT) M5 × 5	
16	XC3597021	LOWER SHAFT BUSHING PRESSER	
17	XC3496021	GIZA TITE 5 × 16	CHG
18	XC2603050	DISK	

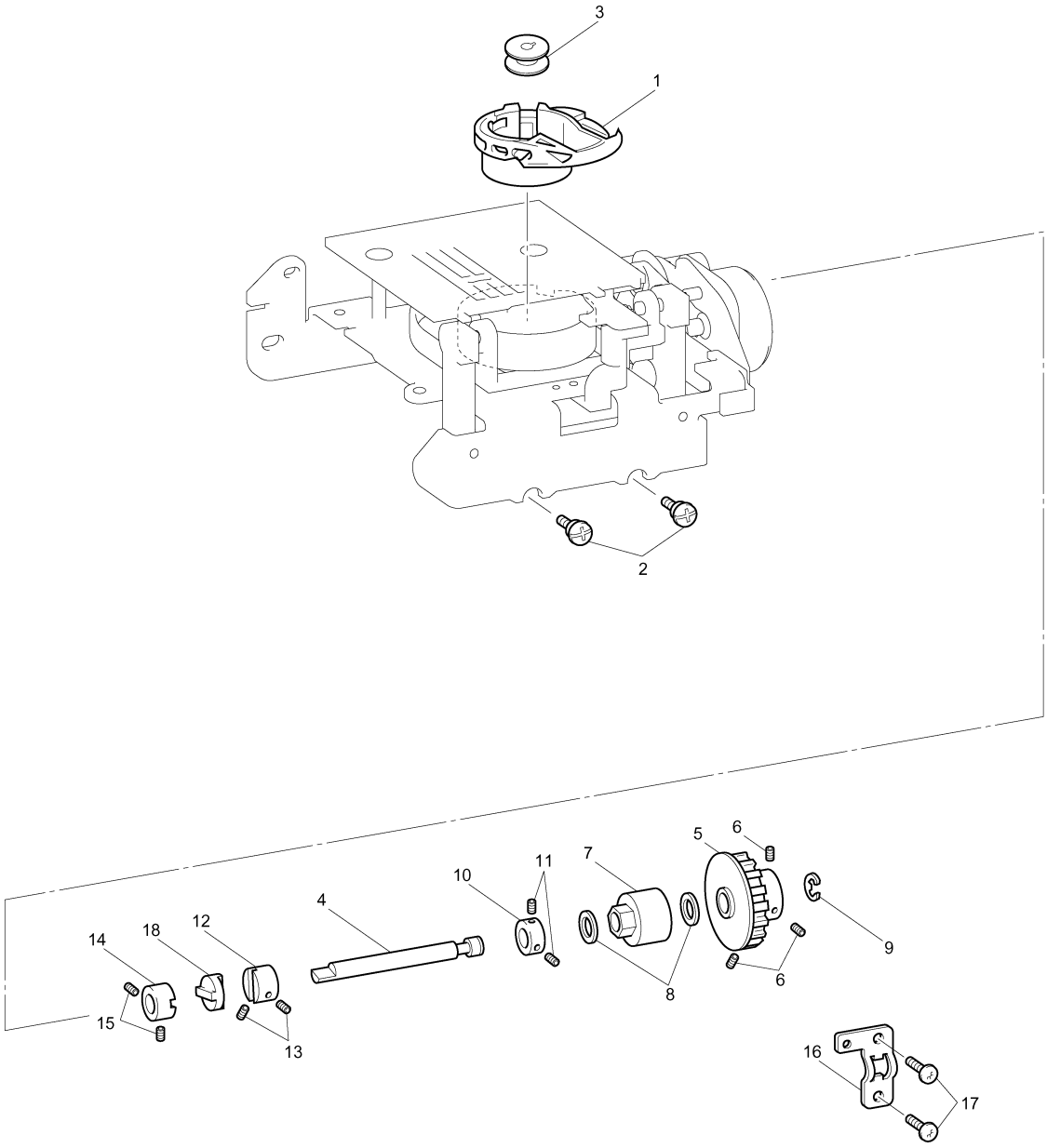
3
1
2
5
6
7
11
10
4
9
14
18
12
8
6
15
13
16
17

(4) BOBBIN WINDER MECHANISM

No.	CODE	NAME	REMARKS
1	XC3600021	BOBBIN WINDER ASSY HOLDER	
2	XC3601221	BW SHAFT HOLDER ASSY	CHG
3	XC4076020	RUBBER RING	
4	XC4063021	BOBBIN WINDER SHAFT SPRING	ADD
5	XC4078121	BOBBIN BASE	
6	XA5877021	BOBBIN THREAD CUTTER HOLDER	CHG
7	X80321001	NT LOWER THREAD CUTTER	
8	XA2862021	BOBBIN WINDER SHAFT STOPPER	CHG
9	060300616	SCREW, BIND M3 × 6	
10	XZ0070021	BOBBIN WINDER SPRING	
11	XC3048021	ASSY:BWSW-S	
12	XC2614021	SW ADJUST PLATE	CHG
13	XC3588021	GIZA TITE 4 × 12	CHG

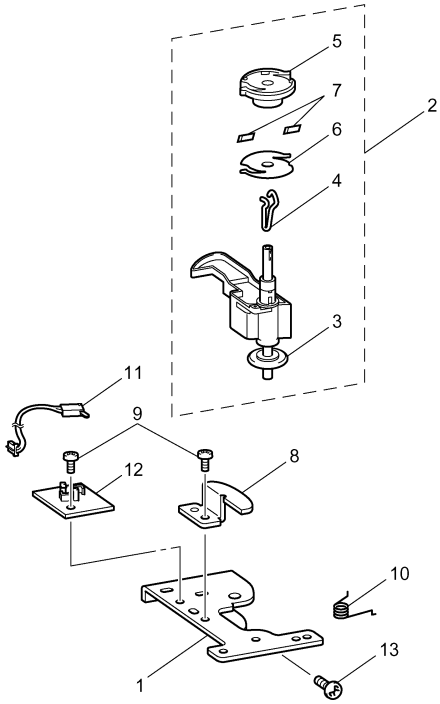
5
7
2
6
4
3
11
9
8
12
10
13
1

(5) THREAD GUIDE MECHANISM

No.	CODE	NAME	REMARKS
1	XC3605021	THREAD TENSION HOLDER ASSY	
2	XC3610021	THREAD TENSION SHAFT	
3	XC3611021	SPRING COVER SHAFT	
4	XC3612021	THREAD TAKE-UP SPRING	
5	XC3613020	THREAD TAKE-UP SPRING COVER	
6	XA0083051	TENSION DISC A	
7	XC2626021	TENSION DISC B	CHG
8	109763053	WASHER	
9	XC3614021	THREAD RELEASE PLATE A	
10	XA1388021	TENSION DISC WASHER	CHG
11	XC3615021	THREAD TENSION SPRING	
12	XC3616021	THREAD TENSION ADJUSTING SCREW	
13	XC3617021	TENSION CONTROL NUT	
14	XC3618021	LINK ARM ASSY	
15	XC3621022	THREAD TENSION DIAL	
16	XC3623021	THREAD TENSION DIAL SHAFT	
17	137991021	SPRING WASHER	CHG
18	025040133	WASHER, PLAIN S 4	
19	048030346	RETAINING RING, E3	
20	XC3624021	THREAD RELEASE PLATE B	
21	XC3625021	THREAD RELEASE PLATE C	
22	XC3626021	THREAD RELEASE PLATE D	
23	XC3627021	SPRING	
24	XC3522021	SPRING GUIDE ASSY	
25	060300416	SCREW, BIND M3 × 4	
26	XC3816021	CASSETTE HOLD PLATE	
27	XC3817021	SPRING	
28	XC3647021	THREAD HOOK LINK C ASSY	
29	XC4036021	DAMPER HOLDER ASSY	
30	XC4039021	OIL DAMPER	
31	XC5162021	SCREW, BIND M2 × 7	
32	XC4213020	GEAR A	
33	XC4214021	DAMPER GEAR SHAFT	
34	XC4215020	GEAR B	
35	048020346	RETAINING RING, E2	
36	XC4216020	SPACER	
37	XC4040121	DAMPER HOLDER SPRING	CHG
38	XC6055021	SCREW, BIND M3 × 3	
39	XC4727121	PCB UNIT:LED LAMP-SL (CS8000)	CHG
	XC5293121	PCB UNIT:LED LAMP-S3L (CS8100)	CHG
40	XC3655021	LED LAMP HOLDER L	
41	XC3659021	ASSY:CASSETTE SWITCH	
42	XC3661121	CASSETTE SWITCH HOLDER	CHG
43	060260316	SCREW, BIND M2.6 × 3	

No.	CODE	NAME	REMARKS
44	XC4041021	ASSY:PFSW-S	
45	XC3662021	PRESSER SWITCH HOLDER	
46	048040346	RETAINING RING, E4	
47	085411015	TAPTITE, BIND B M4 × 10	
48	XC3663021	CASSETTE RELEASE BUTTON	
49	XC3632021	SUPPORTING PLATE ASSY	
50	XC3926021	LINK STOPPER	
51	0A4300506	SCREW, PAN (S/P WASHER) M3 × 5	
52	026030135	WASHER, PLAIN S 3	
53	048020346	RETAINING RING, E2	
54	XC3636021	SLIDE PLATE ASSY	
55	XC3641021	THREAD HOOK LINK A	
56	XC3642021	SPRING	
57	XC3643021	THREAD HOOK LINK B ASSY	
58	XC5282021	SPRING	
59	XC3525021	LINK D GUIDE	
60	060260316	SCREW, BIND M2.6 × 3	
61	025040133	WASHER, PLAIN S 4	CHG
62	018300636	BOLT, SOCKET M3 × 6	
63	XC5399020	THREAD HOOK TUBE	ADD

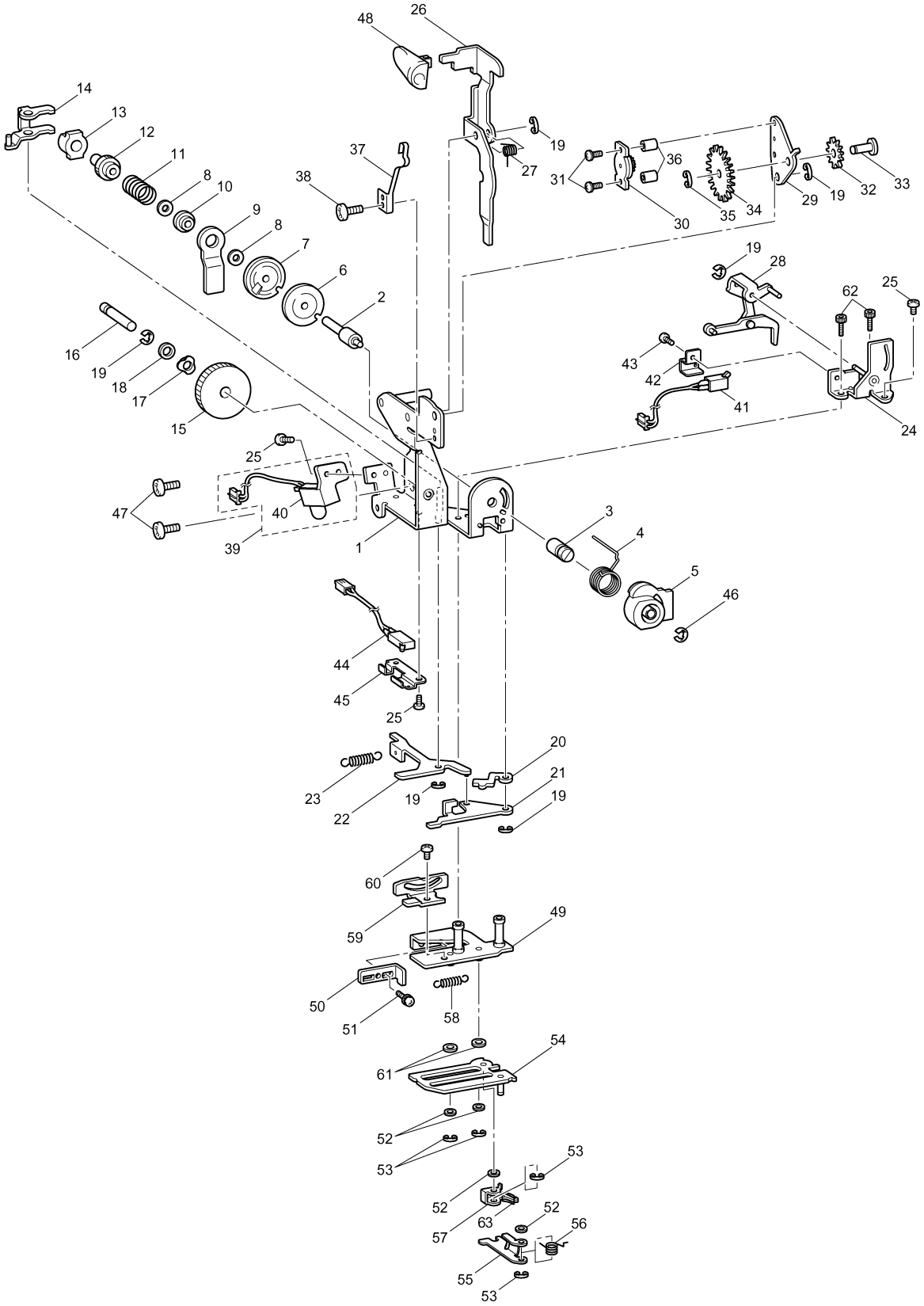
48
26
14
13
12
11
8
10
9
8
7
6
2
37
38
19
27
31
36
30
35
34
29
19
32
33
19
28
62
25
43
42
41
24
16
19
18
17
15
25
47
40
39
1
3
4
5
46
44
45
25
20
21
19
23
22
19
60
59
49
50
51
58
54
61
52
53
53
52
63
57
52
56
55
53

(6) THREAD HOOK MECHANISM

No.	CODE	NAME	REMARKS
1	XC3664021	THREAD CASSETTE ASSY	
2	XC3673021	SPOOL PRESSER	
3	XC6312021	THREAD GUIDE BASE SUPPLY ASSY	
4	052300606	SCREW, PAN (S/P WASHER) M3 × 6	
5	025030236	WASHER, PLAIN M 3	
6	060300416	SCREW, BIND M3 × 4	
7	060300516	SCREW, BIND M3 × 5	
8	XC3734021	THREAD GUIDE BASE SUPPORTER	
9	XC3735021	THREAD TAKE-UP LEVER GUIDE A	
10	XC2597001	PILE 4 × 8	
11	XC3736021	THREAD TAKE-UP LEVER GUIDE B	
12	XC3737021	THREAD TAKE-UP LEVER GUIDE C	
13	XC4132121	PILE HOLDER	
14	XC4133021	PILE HOLDER CAP	
15	XC4134001	PILE 10 × 6	
16	060260316	SCREW, BIND M2.6 × 3	
17	XA5246021	SPRING	
18	085411015	TAPTITE, BIND B M4 × 10	

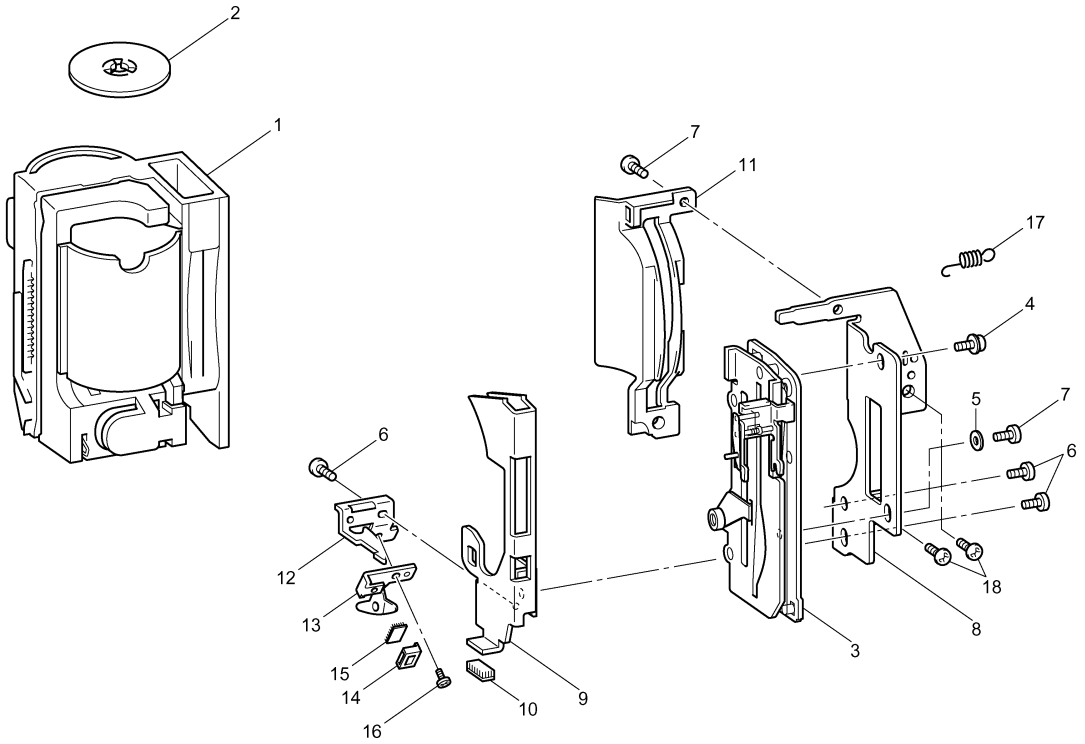
2
1
7
11
17
4
5
7
6
6
12
13
15
14
16
10
9
3
8
18

(7) ELECTRONIC PARTS / MOTOR UNIT

No.	CODE	NAME	REMARKS
		ELECTRONIC PARTS	
1	XC6342021	MAIN PCB S2 SUPPLY ASSEMBLY	CHG
	XC6345021	MAIN PCB S3 SUPPLY ASSEMBLY	CHG
2	085310815	TAPTITE, BIND B M3 × 8	ADD
3	052300606	SCREW, PAN (S/P WASHER) M3 × 6	ADD
4	085311015	SCREW, BIND B TITE 3 × 10	
5	060300616	SCREW, BIND M3 × 6	
6	XC6337021	SSVR PCB S1L SUPPLY ASSEMBLY	CHG
7	XC6343021	MOTER PCB S2 SUPPLY ASSEMBLY	CHG
8	XC6062021	FC JACK SUPPLY ASSY	
9	XC5409021	FERRITE CORE:FSRB140140RNB00T	
10	X51271021	NUT	CHG
11	XC4776021	ASSY:GROUND LEAD WIRE S1 (CS8000)	
	XC5378021	ASSY:GROUND LEAD WIRE S3 (CS8100)	
12	XC4759021	SET PLATE L	
13	XC4760021	SET PLATE R	
14	XC4761021	PC BOARD SUPPORTER	
15	085411015	TAPTITE, BIND B M4 × 10	
16	XC3751021	MINI CLAMP:UAMS-02	
17	XC5409021	FERRITE CORE:FSRB140140RNB00T	
18	060300416	SCREW, BIND M3 × 4	
19	XC6327021	POWER PCB SUPPLY ASSY	
20	XC3787022	BREAK COVER (CS8000)	
	XC3787021	BREAK COVER (CS8100)	
21	XC4717121	ASSY:INLET UL (CS8000)	
	XC3788121	ASSY:INLET (CS8100)	
22	085311015	SCREW, BIND B TITE 3 × 10	
23	XC3588021	GIZA TITE 4 × 12	CHG
24	XC6052021	POWER SUPLY CORD:UL CSA-LF (U.S.A., Canada)	
	XA0070121	POWER SUPPLY CORD (Europe)	
	X59354121	POWER SUPPLY CORD -BS (U.K.)	CHG
	X59328121	POWER CORD (Australia)	
		MOTOR UNIT	
25	XC6912021	MAIN MOTOR SUPPLY ASSY	CHG
26	XC3803020	MOTOR FAN	
27	XC3804121	MOTOR HOLDER	
28	0A5301006	SCREW,PAN(S/P WASHER)M3 × 10	
29	XC3805021	GIZA TITE 5 × 16	CHG
30	XC3806121	TIMING BELT 372-2GT-6	CHG
31	XC6651121	FOOT CONTOROLLER:FC-313-81-LF	CHG

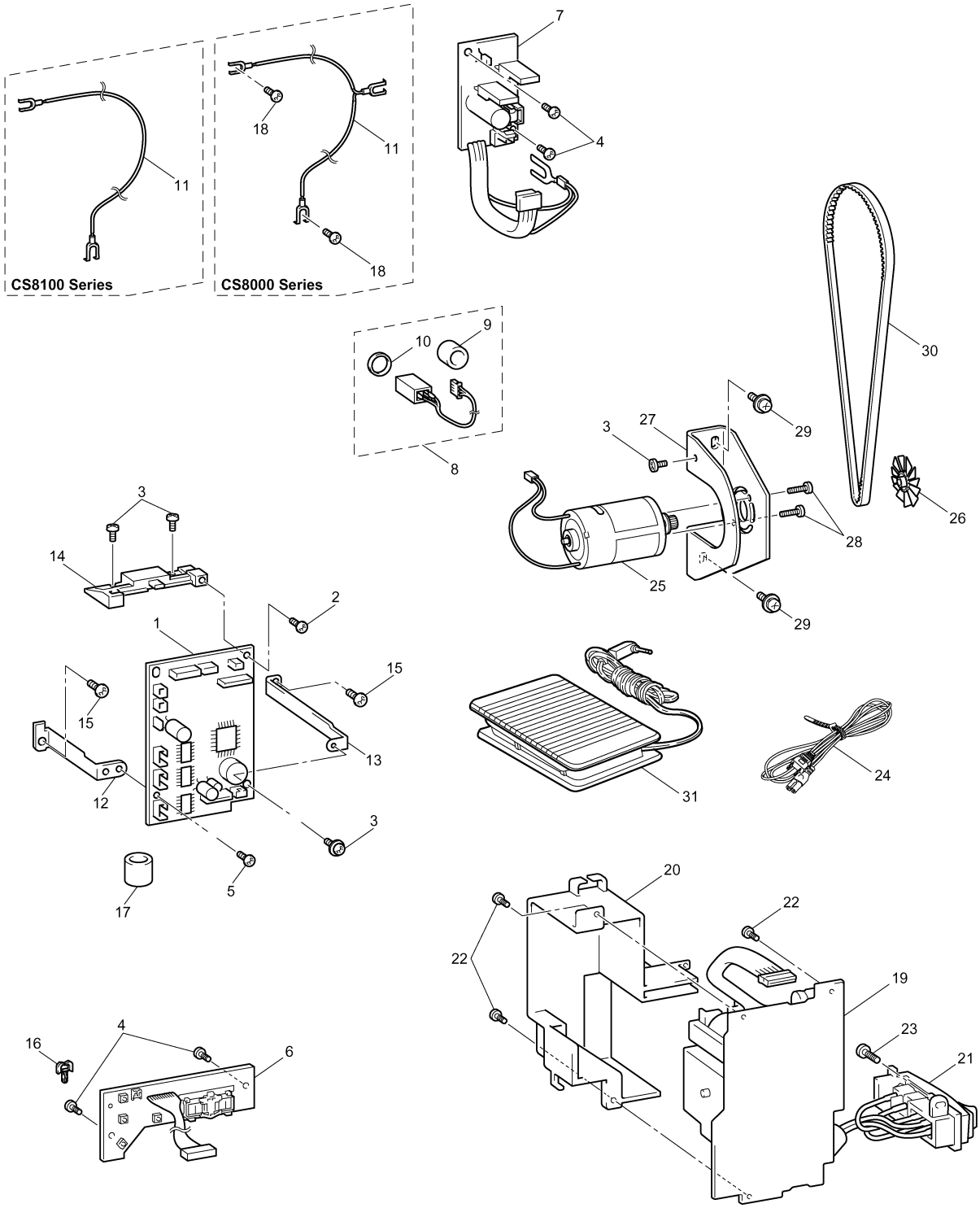
CS8100 Series
CS8000 Series
11
18
11
18
7
4
10
9
8
30
3
27
29
26
28
25
29
3
14
2
1
15
15
13
12
3
5
17
31
24
20
22
22
19
23
21
16
4
6

(8) ATTACHMENTS / PACKING MATERIALS / PRINTED MATTER

No.	CODE	NAME	REMARKS
		ATTACHMENTS	
1	XC2691021	BH PRESSER FOOT ASSY	CHG
2	XC3098051	OVERCASTING STITCH FOOT ASSY	
3	XC4051051	BLIND STITCH FOOT ASSY	
4	XA5523020	NET	CHG
5	X52800120	BOBBIN	
6	X54243001	SEAM RIPPER	
7	X58358021	Z NEEDLE ASSY	CHG
8	X59476021	CLEANING BRUSH	CHG
9	XC4237021	DRIVER ASSY	
10	XC3834021	SPOOL STAND ASSY	
11	130012054	SPOOL PRESSER A	
12	XA5752021	SPOOL CAP (SMALL)	
13	XC4487021	ACCESSORY BAG	
14	XC4551020	NEEDLE EXCHANGE TOOL	
15	X53840351	TRANSPARENCY PRESSER FOOT	
16	X59375151	BUTTON SEWING FOOT	
17	135793001	PUNCH	CHG
18	130013154	SPOOL PRESSER B	
19	X59296121	TWIN NEEDLE (1PC)	CHG
20	X59370051	ZIPPER FOOT	
21	XC4842022	DUST COVER ASSY	
		PACKING MATERIALS	
22	XC6028021	POLYSTYRENE FOAM PAD ASSY S01	
23	XC6031021	PRESSER LEVER FIXING	
24	XC6999021	BAG,520 × 400	CHG
25	XC4863021	COLOR CARTON (CS8060 : U.S.A.)	
	XC7113021	CARTON ASSY (CS8060 : CANADA)	ADD
	XC5313021	CARTON (CS8060)	CHG
	XC5313023	CARTON (CS8070)	CHG
	XC5313025	CARTON (CS8080)	CHG
	XC4863022	COLOR CARTON (CS8150 : U.S.A.)	
	XC7113022	CARTON ASSY (CS8150 : CANADA)	ADD
	XC5313022	CARTON (CS8120)	
	XC5313024	CARTON (CS8130)	
26	XC5214021	BUBBLE PACK	
27	X57847051	PLUG LABEL (U.K.)	
28	LA6041001	SECURITY TAG (U.S.A.)	
29	160670021	BAG, 150 × 350	ADD
30	264030021	BAG, 165 × 250	ADD
31	XC5400021	BAG, 320 x 155 (For FLAP TABLE)	ADD
		PRINTED MATTER (CS8000 Series)	
	XC3422021	INSTRUCTION MANUAL ASSY (Spanish, English)	
	XC5244021	INSTRUCTION MANUAL (Spanish)	

No.	CODE	NAME	REMARKS
	XC5247021	INSTRUCTION MANUAL (English)	
	XC5256021	QUICK REFERENCE GUIDE	
	XC0380021	WARRANTY CARD (U.S.A.)	
	130800021	BAG,220 × 310	
	XC3423021	INSTRUCTION MANUAL ASSY (French, English)	
	XC5245021	INSTRUCTION MANUAL (French)	
	XC5247021	INSTRUCTION MANUAL (English)	
	XC5256021	QUICK REFERENCE GUIDE	
	181401172	INSERTION WARRANTY COUPON (Canada, Switzerland)	
	130800021	BAG,220 × 310	
	XC3424021	INSTRUCTION MANUAL ASSY	
	XC5246021	INSTRUCTION MANUAL (German)	
	XC5256021	QUICK REFERENCE GUIDE	
	UH3851001	WARRANTY CARD EUR (Europe)	
	130800021	BAG,220 × 310	
	XC3425021	INSTRUCTION MANUAL ASSY (English)	
	XC5247021	INSTRUCTION MANUAL (English)	
	XC5256021	QUICK REFERENCE GUIDE	
	181401137	INSERTION WARRANTY COUPON (U.K.)	
	UH3851001	WARRANTY CARD EUR (Europe)	
	130800021	BAG,220 × 310	
	XC3426021	INSTRUCTION MANUAL ASSY (French, Dutch)	
	XC5245021	INSTRUCTION MANUAL (French)	
	XC5248021	INSTRUCTION MANUAL (Dutch)	
	XC5256021	QUICK REFERENCE GUIDE	
	UH3851001	WARRANTY CARD EUR (Europe)	
	130800021	BAG,220 × 310	
	XC3427021	INSTRUCTION MANUAL ASSY (Italian)	
	XC5254021	INSTRUCTION MANUAL (Italian)	
	XC5256021	QUICK REFERENCE GUIDE	
	UH3851001	WARRANTY CARD EUR (Europe)	
	XA6351121	WARRANTY CARD (Italian)	
	130800021	BAG,220 × 310	
	XC3428021	INSTRUCTION MANUAL ASSY (French, German)	
	XC5245021	INSTRUCTION MANUAL (French)	
	XC5246021	INSTRUCTION MANUAL (German)	
	XC5256021	QUICK REFERENCE GUIDE	
	181401172	INSERTION WARRANTY COUPON (Canada, Switzerland)	
	UH3851001	WARRANTY CARD EUR (Europe)	
	130800021	BAG,220 × 310	

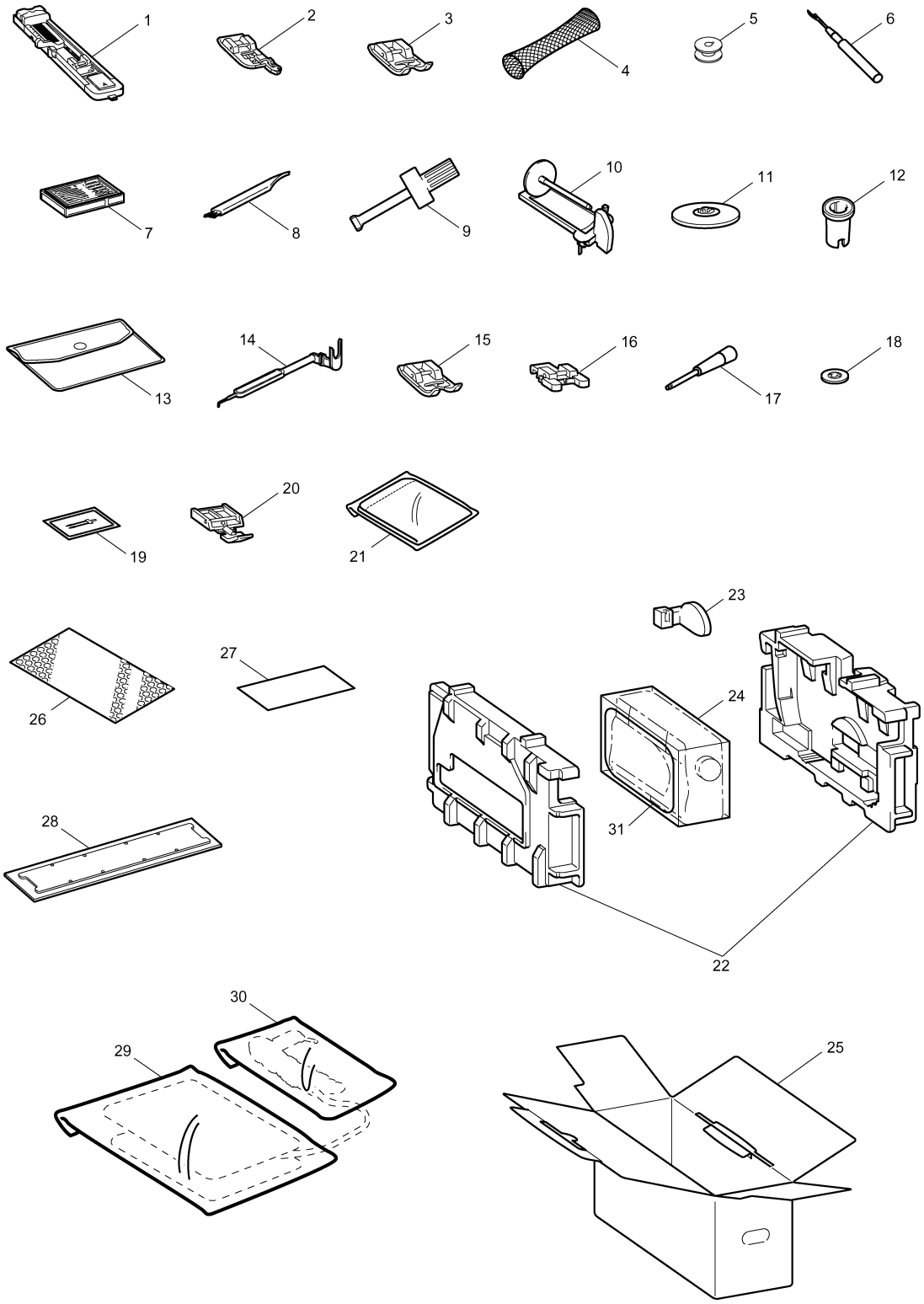
1
2
3
4
5
6
7
8
9
10
11
12
13
14
15
16
17
18
19
20
21
22
23
24
25
26
27
28
29
30
31

(8) ATTACHMENTS / PACKING MATERIALS / PRINTED MATTER

No.	CODE	NAME	REMARKS
	XC3444021	INSTRUCTION MANUAL ASSY (Italian)	
	XC5254021	INSTRUCTION MANUAL (Italian)	
	130800021	BAG,220 × 310	
	XC3429021	INSTRUCTION MANUAL ASSY	
	XC6042021	INSTRUCTION BOOK (Danish)	ADD
	XC6478021	INSTRUCTION BOOK (Swedish)	ADD
	XC6775021	INSTRUCTION MANUAL ASSY (English)	ADD
	XC5247021	INSTRUCTION MANUAL (English)	
	XC5256021	QUICK REFERENCE GUIDE	
	UH3851001	WARRANTY CARD EUR (Europe)	
	130800021	BAG,220 × 310	
	XC6228021	INSTRUCTION MANUAL ASSY	
	XC5247021	INSTRUCTION MANUAL (English)	
	XC5256021	QUICK REFERENCE GUIDE	
	130800021	BAG,220 × 310	
		PRINTED MATTER (CS8100 Series)	
	XC3430021	INSTRUCTION MANUAL ASSY (English, Spanish)	
	XC5252021	INSTRUCTION MANUAL (English)	
	XC5249021	INSTRUCTION MANUAL (Spanish)	
	XC0380021	WARRANTY CARD (U.S.A.)	
	XC5256021	QUICK REFERENCE GUIDE	
	XC5257021	QUICK REFERENCE GUIDE (PANEL)	
	XC5258021	LANGUAGE SETTING SHEET	
	130800021	BAG,220 × 310	
	XC3431021	INSTRUCTION MANUAL ASSY (English, French)	
	XC5252021	INSTRUCTION MANUAL (English)	
	XC5250021	INSTRUCTION MANUAL (French)	
	181401172	INSERTION WARRANTY COUPON (Canada, Switzerland)	
	XC5256021	QUICK REFERENCE GUIDE	
	XC5257021	QUICK REFERENCE GUIDE (PANEL)	
	XC5258021	LANGUAGE SETTING SHEET	
	130800021	BAG,220 × 310	
	XC3432021	INSTRUCTION MANUAL ASSY	
	XC5251021	INSTRUCTION MANUAL (German)	
	UH3851001	WARRANTY CARD EUR (Europe)	
	XC5256021	QUICK REFERENCE GUIDE	
	XC5257021	QUICK REFERENCE GUIDE (PANEL)	
	XC5258021	LANGUAGE SETTING SHEET	
	130800021	BAG,220 × 310	
	XC3434021	INSTRUCTION MANUAL ASSY	
	XC5252021	INSTRUCTION MANUAL (English)	
	181401137	INSERTION WARRANTY COUPON	

No.	CODE	NAME	REMARKS
	UH3851001	WARRANTY CARD EUR (Europe)	
	XC5256021	QUICK REFERENCE GUIDE	
	XC5257021	QUICK REFERENCE GUIDE (PANEL)	
	XC5258021	LANGUAGE SETTING SHEET	
	130800021	BAG,220 × 310	
	XC3435021	INSTRUCTION MANUAL ASSY (French, Dutch)	
	XC5250021	INSTRUCTION MANUAL (French)	
	XC5253021	INSTRUCTION MANUAL (Dutch)	
	UH3851001	WARRANTY CARD EUR (Europe)	
	XC5256021	QUICK REFERENCE GUIDE	
	XC5257021	QUICK REFERENCE GUIDE (PANEL)	
	XC5258021	LANGUAGE SETTING SHEET	
	130800021	BAG,220 × 310	
	XC3439021	INSTRUCTION MANUAL ASSY (Italian)	
	XC5255021	INSTRUCTION MANUAL (Italian)	
	UH3851001	WARRANTY CARD EUR (Europe)	
	XA6351121	WARRANTY CARD (Italian)	
	XC5256021	QUICK REFERENCE GUIDE	
	XC5257021	QUICK REFERENCE GUIDE (PANEL)	
	XC5258021	LANGUAGE SETTING SHEET	
	130800021	BAG,220 × 310	
	XC3440021	INSTRUCTION MANUAL ASSY (German, French)	
	XC5251021	INSTRUCTION MANUAL (German)	
	XC5250021	INSTRUCTION MANUAL (French)	
	UH3851001	WARRANTY CARD EUR (Europe)	
	XC5256021	QUICK REFERENCE GUIDE	
	XC5257021	QUICK REFERENCE GUIDE (PANEL)	
	XC5258021	LANGUAGE SETTING SHEET	
	130800021	BAG,220 × 310	
	XC3445021	INSTRUCTION MANUAL ASSY (Italian)	
	XC5255021	INSTRUCTION MANUAL (Italian)	
	130800021	BAG,220 × 310	
	XC3441021	INSTRUCTION MANUAL ASSY (English)	
	XC6047021	INSTRUCTION BOOK (Danish)	ADD
	XC6987021	INSTRUCTION BOOK (Swedish)	ADD
	XC6776021	INSTRUCTION MANUAL ASSY (English)	ADD
	XC5252021	INSTRUCTION MANUAL (English)	
	UH3851001	WARRANTY CARD EUR (Europe)	
	XC5256021	QUICK REFERENCE GUIDE	
	XC5257021	QUICK REFERENCE GUIDE (PANEL)	
	XC5258021	LANGUAGE SETTING SHEET	
	130800021	BAG,220 × 310	
	XC6229021	INSTRUCTION MANUAL ASSY (English)	

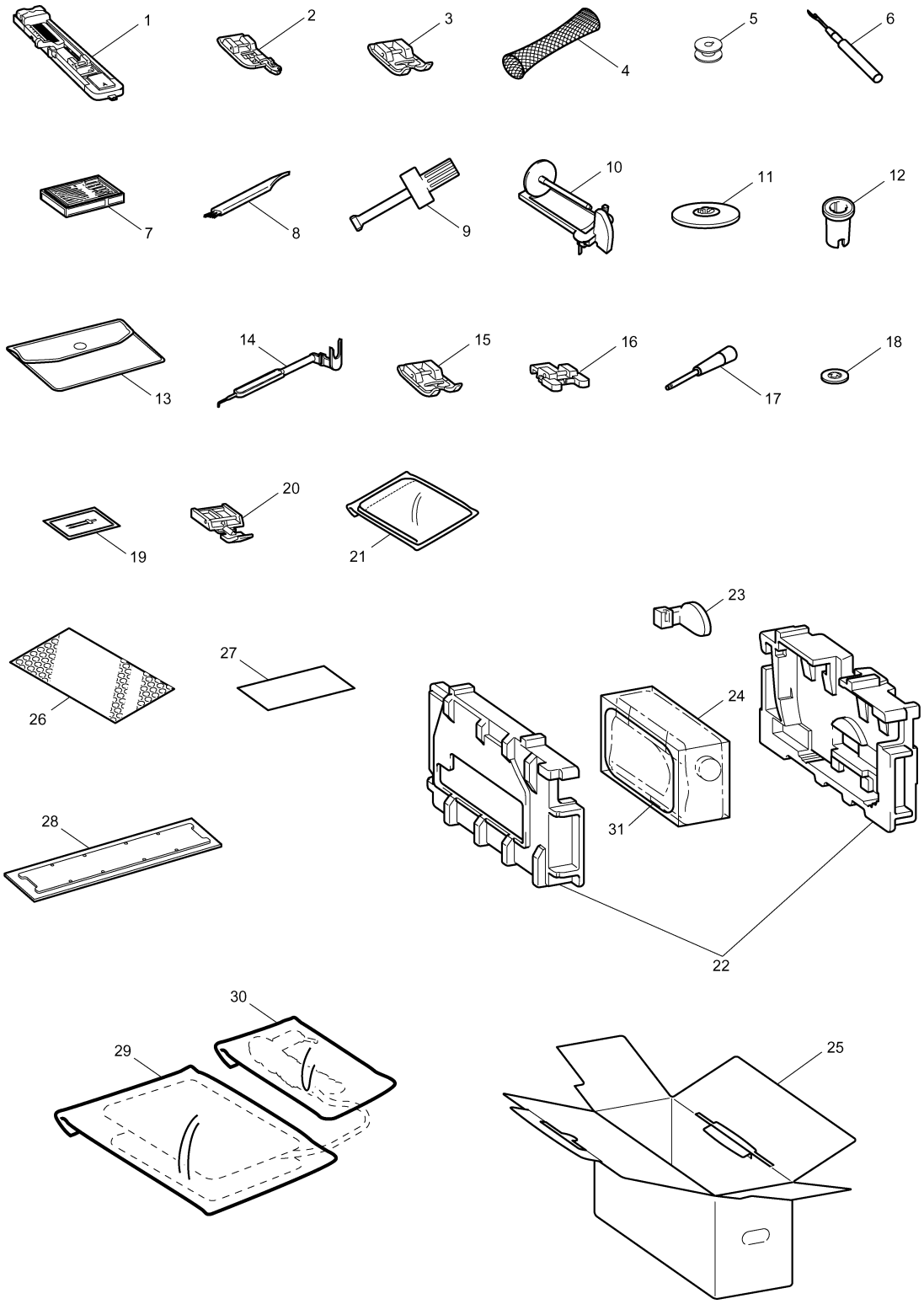
1
2
3
4
5
6
7
8
9
10
11
12
13
14
15
16
17
18
19
20
21
22
23
24
25
26
27
28
29
30
31

(8) ATTACHMENTS / PACKING MATERIALS / PRINTED MATTER

No.	CODE	NAME	REMARKS	No.	CODE	NAME	REMARKS
	XC5252021	INSTRUCTION MANUAL (English)					
	XC5256021	QUICK REFERENCE GUIDE					
	XC5257021	QUICK REFERENCE GUIDE (PANEL)					
	XC5258021	LANGUAGE SETTING SHEET					
	130800021	BAG,220 × 310					

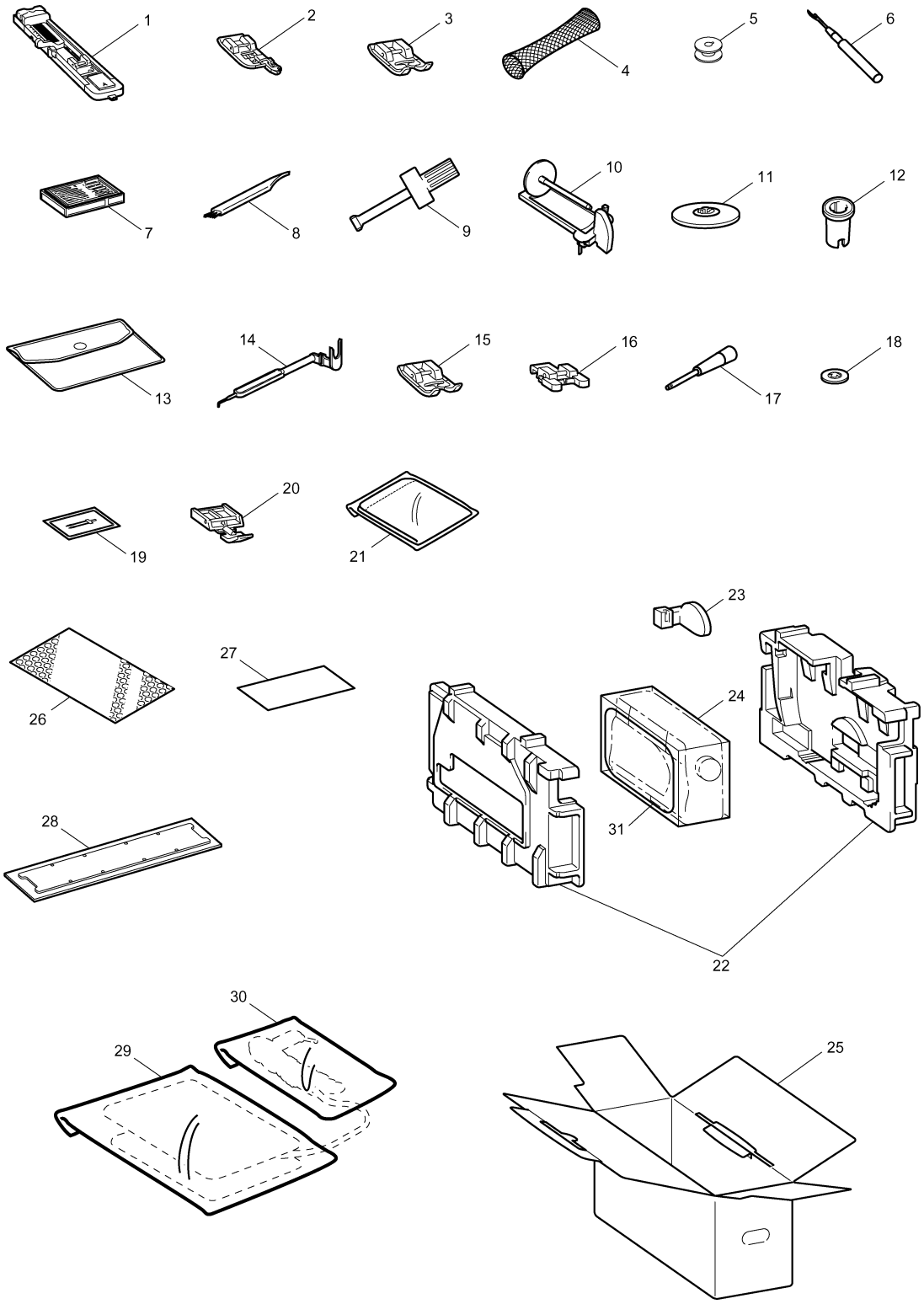
1
2
3
4
5
6
7
8
9
10
11
12
13
14
15
16
17
18
19
20
21
22
23
24
25
26
27
28
29
30
31

NEEDLE-PRESSER MODULE

No.	CODE	NAME	REMARKS
1	XC2394121	UPPER UNIT HOLDER	
2	XC2395121	SHAFT BUSHING ASSEMBLY	
3	0A5401405	SCREW,PAN(S/P WASHER)M4 × 14DB	
4	XC2398020	SHAFT BUSHING A	
5	XC2399021	PRESSER BAR BUSHING	
6	085310815	TAPTITE, BIND B M3 × 8	
7	XC5362020	PLATE SPRING	
8	XC2400021	THREAD TAKE-UP COUNTER WEIGHT	
9	012500532	SET SCREW, SOCKET (FT) M5 × 5	
10	XC2401021	UNIT SHAFT	
11	132434020	WASHER	CHG
12	048060346	RETAINING RING, E6	
13	XC3545021	NEEDLE BAR SUPPORTER ASSY	
14	XC2419021	SHAFT	
15	XC2420020	SHAFT	
16	XC2421121	PLATE	
17	060300516	SCREW, BIND M3 × 5	
18	XC2423021	NEEDLE BAR	
19	XC3553021	NEEDLE BAR THREAD GUIDE	
20	X53053052	SCREW SM2.38	
21	XC2426020	NEEDLE THREAD PLATE	
22	XC3554051	NEEDLE BLOCK	
23	XC4162021	NEEDLE BLOCK SUPPORTER	
24	XC4266021	NEEDLE CLAMP SCREW	
25	014401232	SET SCREW, SOCKET (FT) M4 × 12	
26	X56851021	LOCK NUT	
27	XC2429021	SPRING	
28	XZ0152021	NEEDLE BAR CRANK ROD ASSY	CHG
29	132051022	SCREW, FLAT SM3.57-40 × 7 L	CHG
30	012500532	SET SCREW, SOCKET (FT) M5 × 5	
31	012400432	SET SCREW, SOCKET (FT) M4 × 4	
32	XC2434021	NEEDLE THREAD BLOCK	
33	XC2435020	ZIGZAG ADJUSTING NUT	
34	018301032	BOLT,SOCKET M3 × 10	
35	XC4301021	SPRING-Z	
36	XC2436021	NEEDLE HOLDER BROCK	
37	XC2437021	SHAFT ASSY	
38	XC3037021	SCREW3 × 10	
39	XC2440021	SHAFT	
40	XC2441021	SPRING	
41	048040346	RETAINING RING, E4	
42	XC3833121	THREAD TAKE-UP LEVER ASSY	CHG
43	XC2443020	THREAD TAKE-UP LEVER LINK	
44	XC2444021	PRESSER BAR	

No.	CODE	NAME	REMARKS
45	XC2445021	PRESSER BAR CLAMP ASSY	
46	014501032	SET SCREW,SOCKET(CP)M5 × 10	
47	XC2448021	SPRING	
48	XC2449021	PRESSER SPRING SUPPORTER	
49	XC3015051	PRESSER FEED HOLDER ASSY	
50	XA4813051	SCREW	
51	XC3021051	Z FOOT	
52	XC2451021	PRESSER FOOT LIFTER	
53	XC2452021	PRESSER LIFT SHAFT	
54	XA1860120	WASHER	
55	XC2453021	LEVER GUIDE SHAFT	
56	XC3555021	LEVER AB ASSY	
57	048020346	RETAINING RING, E2	
58	XC2461021	SPRING	
59	XC3561121	LEVER SUPPORTER PLATE	CHG
60	085310615	TAPTITE, BIND B M3 × 6	
61	XC7215021	BH SWITCH ASSY	CHG
62	085411015	TAPTITE, BIND B M4 × 10	
63	XC2474020	Z ZIGZAG CAM	
64	XC2475021	SHAFT	
65	XC2476021	Z ZIGZAG LEVER ASSY	
66	XC2480020	Z LEVER CUP	
67	048030346	RETAINING RING, E3	
68	XC2481021	MOTOR,PULSE:Z SMJ35-4840-A	
69	085310815	TAPTITE, BIND B M3 × 8	
70	XC2483020	T CAM	
71	XC2491021	THREAD RELEASER ASSY	
72	XC2494021	THREAD RELEASE LEVER ASSY	
73	XC2499021	ADJUSTING PLATE	
74	XC5348021	GROUND SPRING	
75	XC3034020	THREAD GUIDE PLATE	
76	XC3563021	LEVER RELEASE PLATE ASSY	
77	XZ0149021	TAPTITE,PAN B 4 × 12	CHG
78	XZ0155021	POLYESTER SLIDER	CHG
79	000020415	SCREW,BIND M2 × 4	
80	XC5215021	SUPPORT SPRING	
81	014300532	SET SCREW, SOCKET (CP) M3 × 5	
	XC5437021	NEEDLE-PRESSER SUPPLY MODULE (EUROPE)	CHG
	XC5437022	NEEDLE-PRESSER SUPPLY MODULE (U.S.A. & CANADA)	ADD

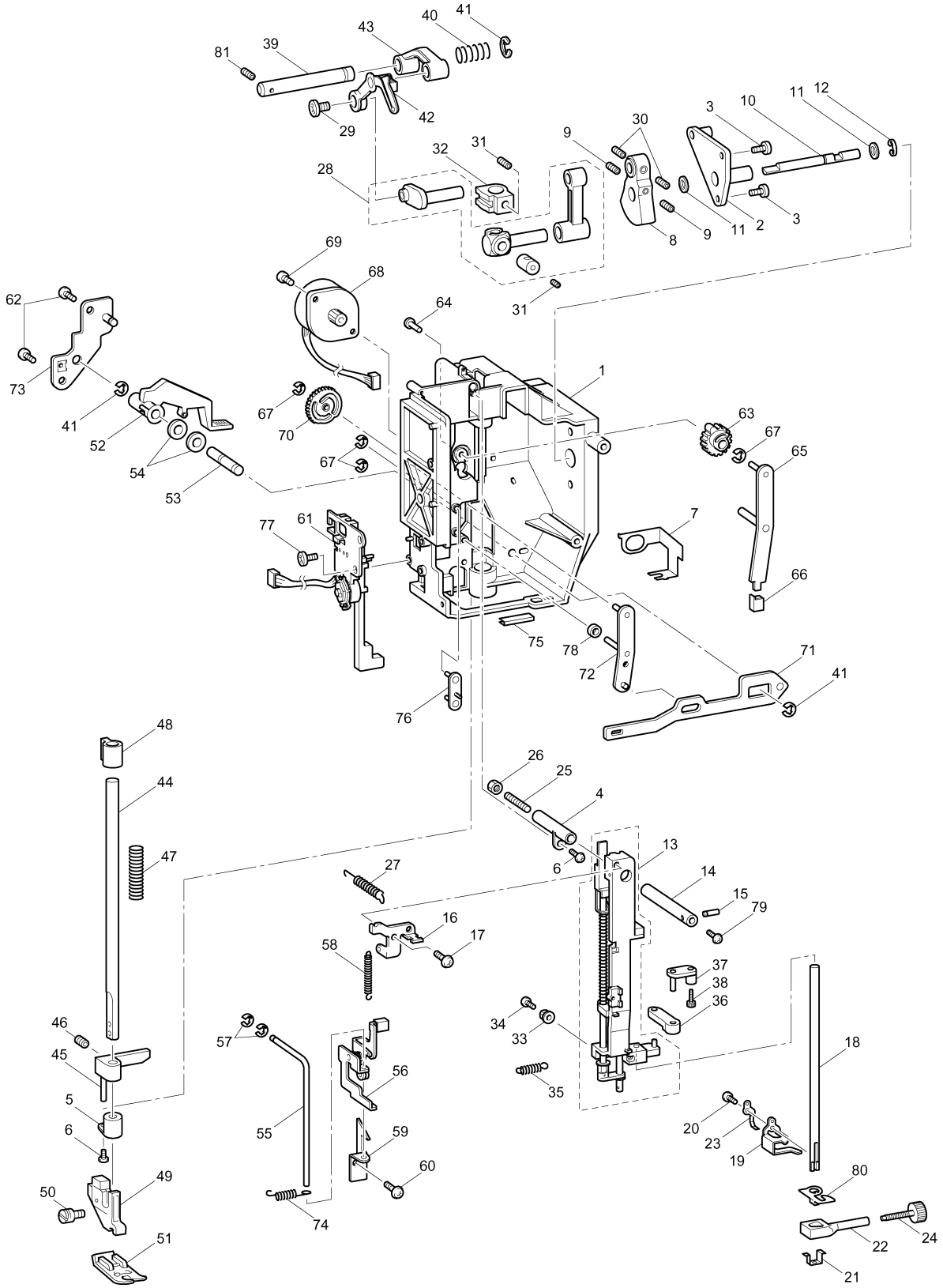

81
39
43
40
41
29
42
28
32
31
9
30
3
10
11
12
8
9
11
2
3
31
69
68
64
62
73
41
52
54
53
67
70
67
1
63
67
65
7
66
77
61
75
78
72
71
41
76
48
44
47
26
25
4
6
13
14
15
79
27
16
17
58
37
38
36
34
33
35
46
45
5
6
49
50
51
57
55
56
59
60
74
18
20
23
19
80
22
24
21

FEED MODULE

No.	CODE	NAME	REMARKS
1	XC3356121	FEED BASE	CHG
2	XC2510021	FEED BAR	
3	XC5467021	FEED DOG	
4	XC2512021	FEED BAR SHAFT A	
5	XC2513021	FEED BAR SHAFT B	
6	XC2514021	FEED BAR SPACER	
7	048020346	RETAINING RING, E2	
8	XC2516021	FEED ARM A	
9	XC2517021	FEED ARM B ASSY	
10	XC2521021	FEED SUPPORTING PLATE ASSY	
11	048020346	RETAINING RING, E2	
12	048030346	RETAINING RING, E3	
13	137999020	POLYESTER SLIDER	
14	XZ0174021	SPRING	
15	XC2525021	HORIZONTAL FEED SHAFT	
16	048050346	RETAINING RING, E5	
17	X50546050	WASHER,THRUST	
18	XC2527021	FEED ADJUSTER	
19	XC2529020	F GEAR	
20	XC2530021	SPRING	
21	137713020	POLYESTER SLIDER	
22	XC2531021	SPRING	
23	XC2532021	FPM HOLDER ASSY	
24	XC2534021	MOTOR,PULSE:F SMJ35-4840-C	
25	XC2587050	RUBBER	
26	060300516	SCREW, BIND M3 × 5	
27	XC3338021	SCREW3 × 8	
28	018402532	BOLT,SOCKET M4 × 25	
29	XC2537021	SPRING	
30	XC2538021	SPRING	
31	XC2539021	BUSHING SUPPORTER ASSY	
32	060400616	SCREW, BIND M4 × 6	
33	XC2542021	BUSHING PRESSER B	
34	060300516	SCREW, BIND M3 × 5	
35	XC3941051	VERTICAL ADJUSTER SCREW ASSY	
36	XC2546021	M5 NUT	
37	XC2210021	OUTER ROTARY HOOK ASSY	CHG
38	XC2547021	SPRING	
39	XC2549021	VERTICAL FEED SHAFT	
40	XC2550021	SPRING	
41	XC2551020	VERTICAL LEVER	
42	XC2552021	SET SCREW COLLAR	
43	014400432	SET SCREW, SOCKET (CP) M4 × 4	
44	048030346	RETAINING RING, E3	

No.	CODE	NAME	REMARKS
45	XC2553020	VERTICAL SUPPORTING PLATE	
46	137713020	POLYESTER SLIDER	
47	XC2230021	OUTER ROTARY HOOK SHAFT	CHG
48	137805022	SPACER	CHG
49	137976021	WASHER 6	CHG
50	014400632	SET SCREW, SOCKET (CP) M4 × 6	
51	XC2555021	INNER ROTARY HOOK BRACKET ASSY	
52	XC2559021	STOPPER PLATE BLOCK ASSY	
53	060400516	SCREW, BIND M4 × 5	
54	060300816	SCREW, BIND M3 × 8	CHG
55	XC2562121	LOWER SHAFT B ASSY	
56	X52664020	LOWER SHAFT BUSHING	
57	X51383020	WASHER,THRUST	
58	048060346	RETAINING RING, E6	
59	137768121	SET SCREW COLLAR	
60	014400432	SET SCREW, SOCKET (CP) M4 × 4	
61	XC2566021	BUSHING SUPPORTER A	
62	XC2567021	BUSHING PRESSER A	
63	060401616	SCREW, BIND M4 × 16	
64	XC2569051	NEEDLE PLATE A	
65	XC2570021	STOPPER PLATE	
66	XC2571021	F GEAR STOPPER PLATE	
67	060260316	SCREW, BIND M2.6 × 3	
68	X50487051	SCREW M4	
69	XC3585021	DROP KNOB	
70	XC5322021	SLIDE SHAFT	
71	XC2574021	SPRING PLATE	
72	060300516	SCREW, BIND M3 × 5	CHG
73	026030135	WASHER, PLAIN S 3	
	XC5438024	FEED MODULE SUPPLY ASSY (EUROPE)	CHG
	XC5438025	FEED MODULE SUPPLY ASSY (U.S.A & CANADA)	ADD

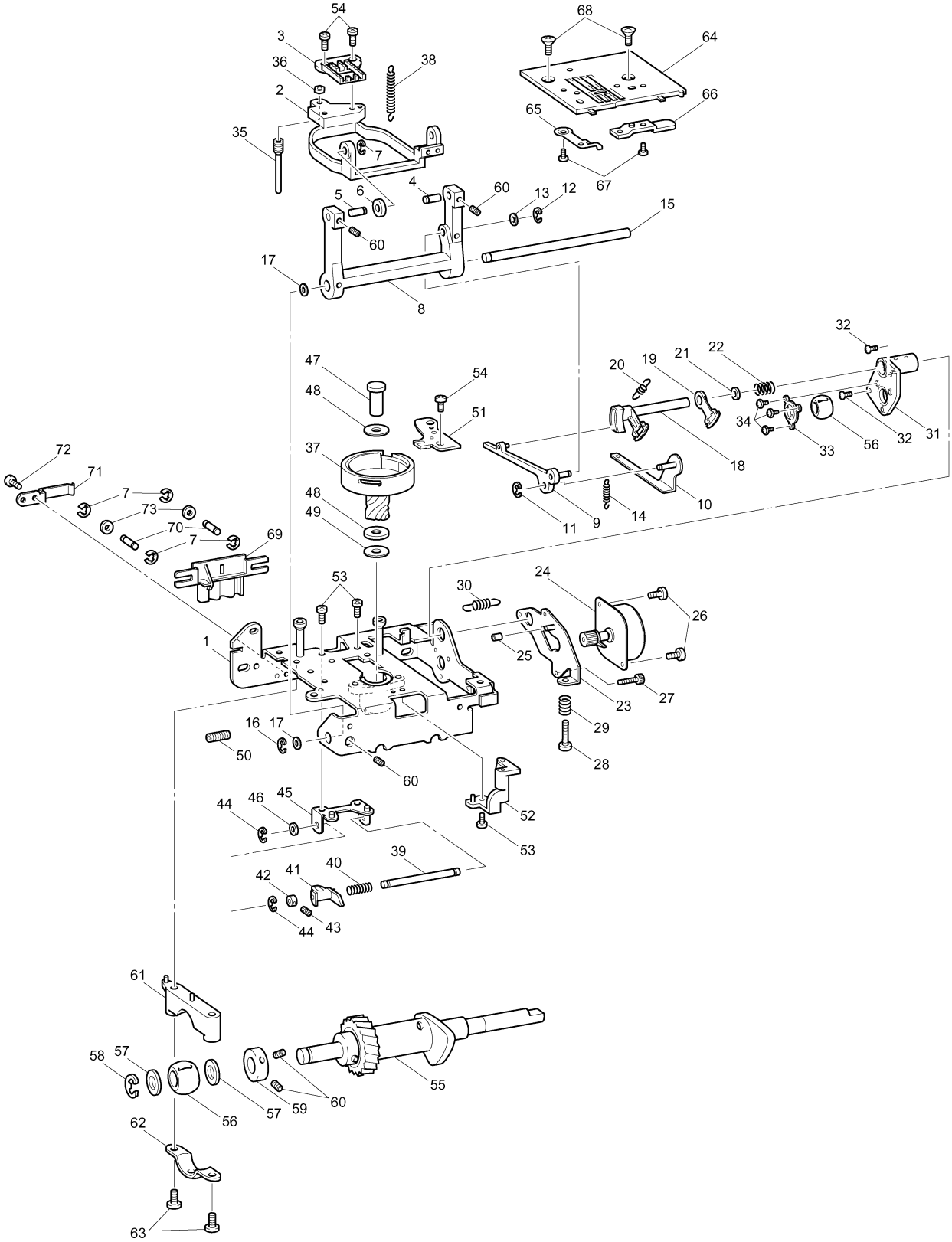
54
3
36
2
35
38
7
68
64
66
65
67
4
60
13
12
5
6
60
15
17
8
32
47
48
54
51
20
19
21
22
34
33
56
32
31
18
37
72
71
7
73
70
7
69
48
49
11
9
14
10
53
30
24
26
1
25
23
27
29
28
16
17
50
60
44
46
45
52
53
39
40
42
41
44
43
61
58
57
56
57
59
60
55
62
63

NC21-S2, S3 Model
CS8000 Series
CS8100 Series
24D03HF885S06/08