PARTS LIST

Model 2041

PARTS LIST

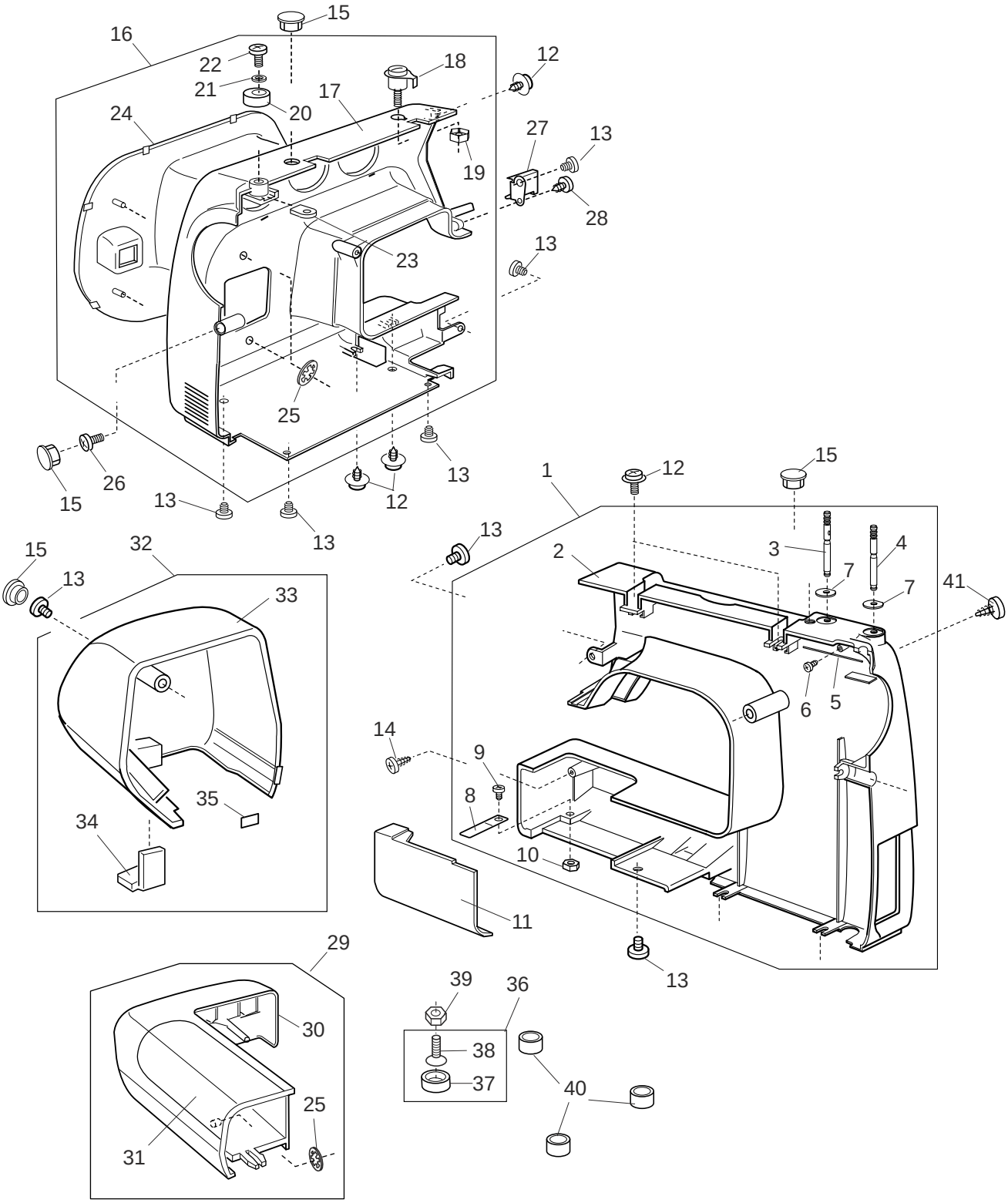
15
16
22
21
20
18
12
17
24
27
13
19
28
23
13
25
26
15
13
12
13
13
1
12
15
13
2
3
4
7
7
41
6
5
15
32
13
33
14
9
8
35
34
10
11
13
29
39
36
30
38
37
40
25
31

PARTS LIST

KEY NO.	PARTS NO.	DESCRIPTION
1	302601002	REAR COVER (UNIT)
2	302001109	REAR COVER
3	652302004	SPOOL PIN
4	652205006	SPOOL PIN
5	736007009	SPOOL PIN SPRING
6	000076317	TAPPING SCREW 3X10
7	735013005	SPOOL PIN SPRING BASE
8	730006000	SPRING
9	000101404	SETSCREW 4X6
10	000061205	NUT
11	739004005	BED COVER PLATE
12	000115205	TP SCREW 4X6
13	000081005	SETSCREW 4X8
14	000121905	TAPPING SCREW 4X12B
15	653006101	CAP
16	302606281	FRONT COVER UNIT
17	302010064	FRONT COVER
18	730501011	THREAD GUIDE PLATE (UNIT)
19	000160102	ADJUSTABLE LOCK NUT 4
20	735016307	BOBBIN WINDER STOPPER
21	000071013	WASHER
22	000103107	SETSCREW 4X14
23	843014004	NUT
24	302011397	PANEL
25	000014007	SNAP RING CS-4
26	000101703	SETSCREW 4X12
27	740022003	THREAD GUIDE PLATE
28	000107307	TAPPING SCREW 3X8B
29	302502002	EXTENSION TABLE (UNIT)
30	302002007	EXTENSION TABLE
31	302003008	EXTENSION TABLE COVER
32	302603406	FACE COVER (UNIT)
33	302004102	FACE COVER
34	840602006	THREAD CUTTER (UNIT)
35	100411104	LAMP STICKER
36	735616200	RUBBER BASE (UNIT)
37	735002001	RUBBER BASE
38	000097901	FLAT SCREW M5X18
39	000061319	NUT
40	739064003	BED RUBBER BASE
41	000119601	TAPPING SCREW 4 X 25B

PARTS LIST

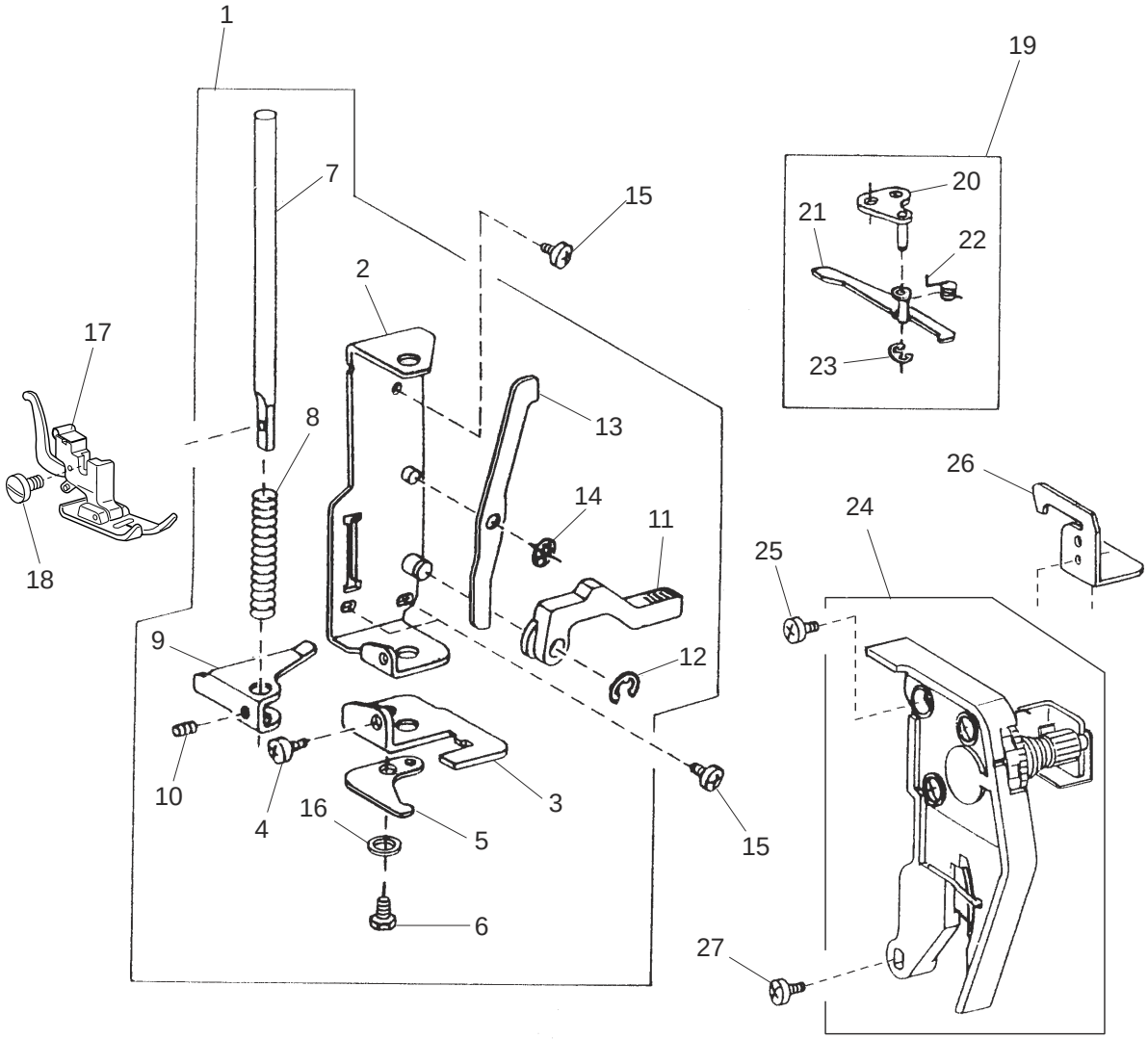

PARTS LIST

KEY NO.	PARTS NO.	DESCRIPTION
1	305604004	PRESSER BAR BASE PLATE (UNIT)
2	735221008	PRESSER BAR BASE PLATE
3	735022009	NEEDLE DROP ADJUSTING PLATE
4	000101404	SETSCREW 4X6
5	735025000	NEEDLE BAR SUPPORTER STOPPER
6	000138307	BOLT 4X8
7	735026001	PRESSER BAR
8	735027002	PRESSER BAR SPRING
9	735028003	PRESSER BAR BRACKET
10	000111500	HEXAGONAL SOCKET SCREW 4X8
11	735029004	PRESSER FOOT LIFTER
12	000001609	SNAP RING E-5
13	735030008	TENSION RELEASE LEVER
14	000013903	SNAP RING CS-5
15	000081005	SETSCREW 4X8
16	000070506	WASHER
17	611520003	PRESSER FOOT (UNIT)
18	660106001	SETSCREW
19	741604008	TENSION RELEASE ARM (UNIT)
20	741008006	TENSION RELEASE ARM BASE
21	739018002	TENSION RELEASE ARM
22	739019003	TENSION RELEASE SPRING
23	000002105	SNAP RING E-3
24	302501001	TENSION ASSEMBLY
25	000103808	SETSCREW 3X5
26	739016000	TOP COVER THREAD GUIDE
27	000101703	SETSCREW 4X12

PARTS LIST

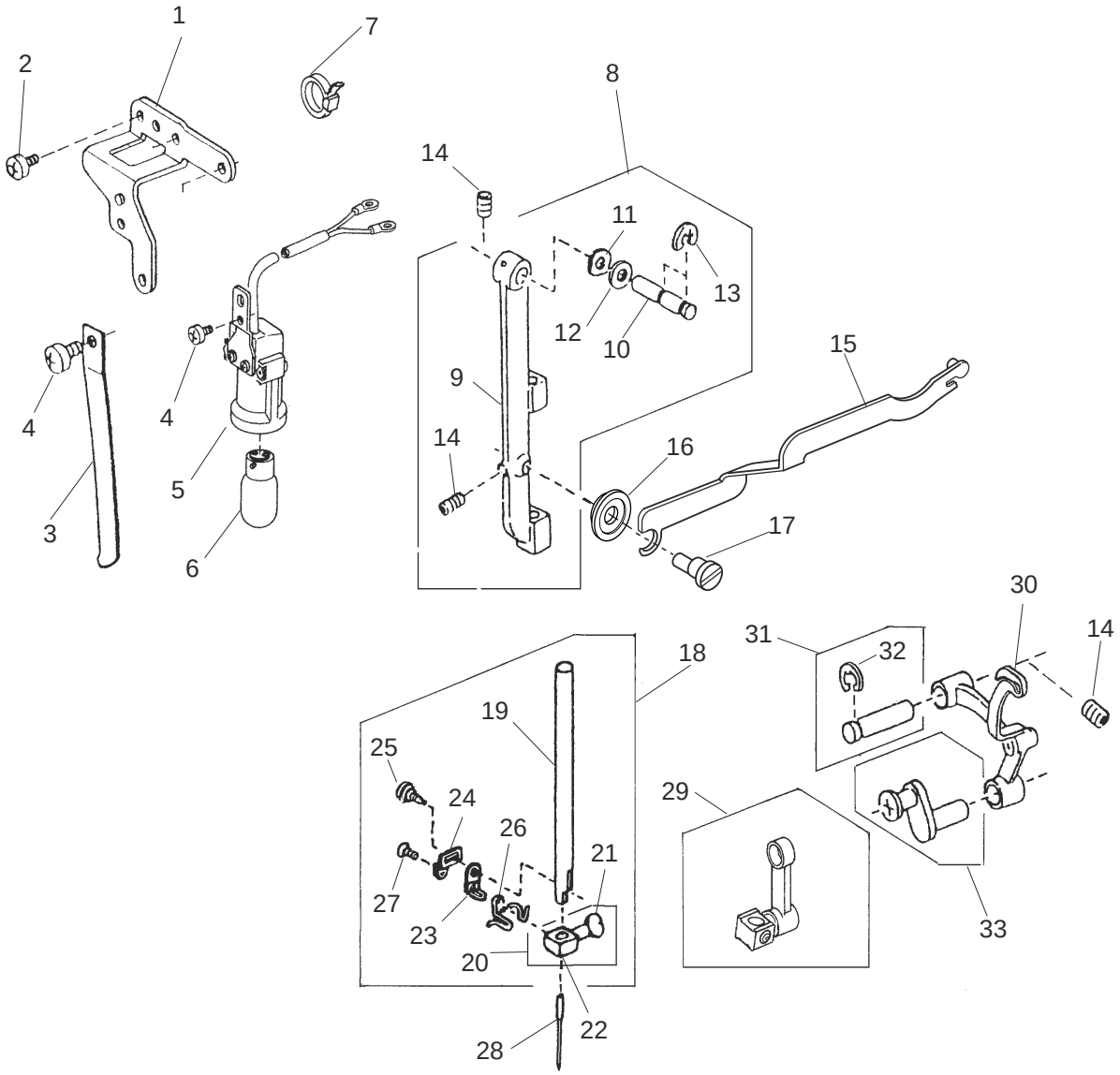
1
2
7
8
14
11
13
12
10
15
9
4
4
14
16
5
3
17
6
30
31
32
14
18
19
25
24
26
29
21
27
23
33
20
22
28

PARTS LIST

KEY NO.	PARTS NO.	DESCRIPTION
1	740007013	LAMP SOCKET SET PLATE
2	000081005	SETSCREW 4X8
3	730024004	NEEDLE BAR SUPPORTER SPRING
4	000101404	SETSCREW 4X6
5	743634003	LAMP SOCKET (UNIT)
6	000009009	LAMP 240V 15W
7	000053008	CORD TIE BAND
8	301610001	NEEDLE BAR SUPPORTER (UNIT)
9	301032003	NEEDLE BAR SUPPORTER
10	730022002	NEEDLE BAR SUPPORTER PIN
11	673022002	WAVE WASHER
12	000070609	PLAIN WASHER
13	000002507	SNAP RING E-4
14	000111902	HEXAGON SOCKET SCREW 5X5
15	735119002	ZIGZAG ROD
16	748021006	ZIGZAG ROD PLAIN WASHER
17	678087007	ECCENTRIC PIN
18	730503116	NEEDLE BAR (UNIT)
19	553085019	NEEDLE BAR
20	801506008	NEEDLE CLAMP (UNIT)
21	102047008	NEEDLE CLAMP SCREW
22	801024007	NEEDLE CLAMP
23	730025005	NEEDLE GUIDE PLATE
24	732105006	NEEDLE CLAMP PLATE
25	802108009	HINGE SCREW
26	680043012	NEEDLE BAR THREAD GUIDE
27	670047004	FLAT SCREW
28	102408089	NEEDLE HA1-14
29	680504005	NEEDLE BAR CONNECTING STUD (UNIT)
30	625506109	THREAD TAKE-UP LEVER (UNIT)
31	731511006	THREAD TAKE-UP LEVER PIN (UNIT)
32	000002806	SNAP RING E-6
33	735504008	NEEDLE BAR CRANK PIN (UNIT)

PARTS LIST

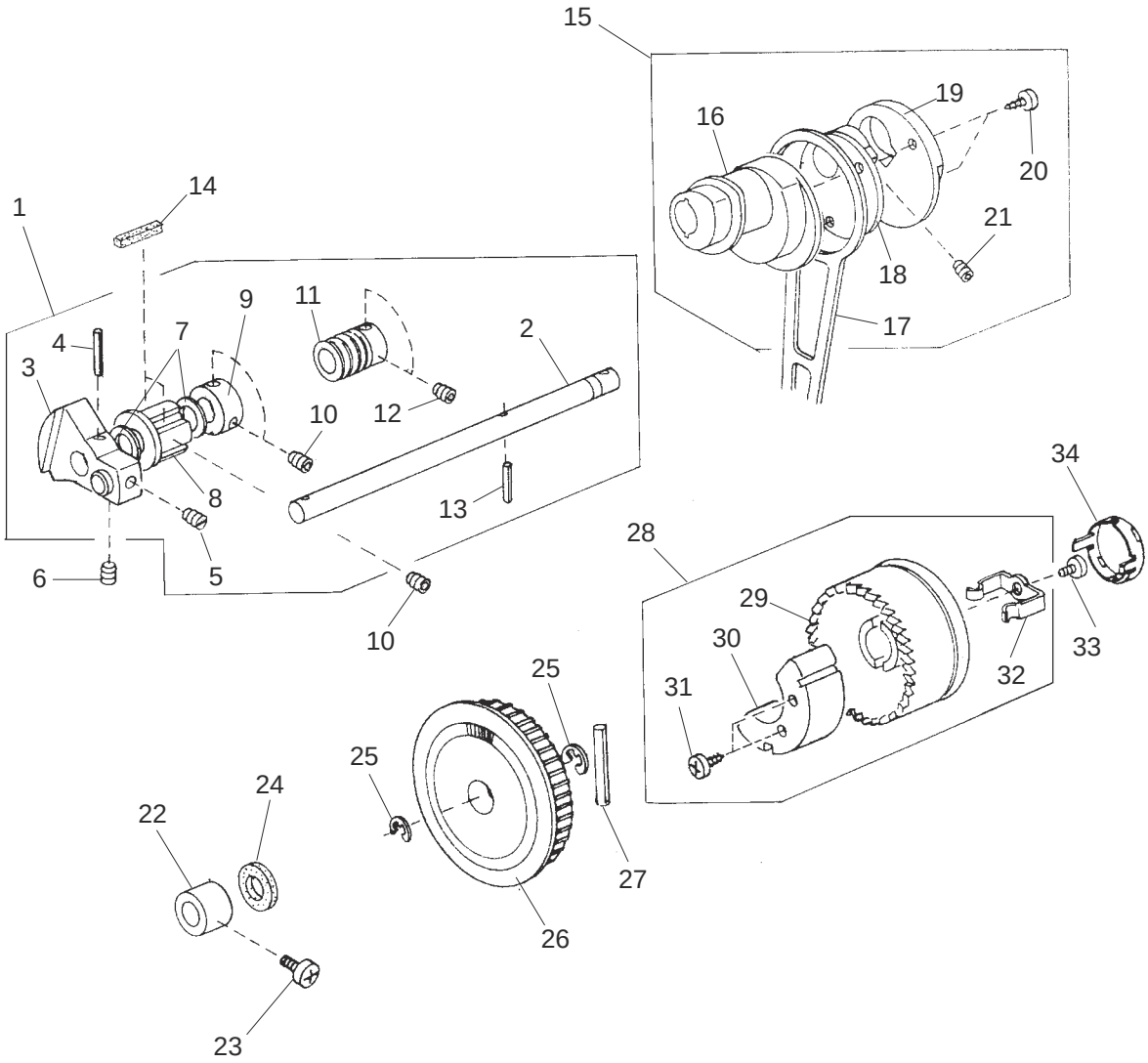
15
16
19
20
21
18
17
1
14
9
11
7
4
3
2
10
12
8
13
5
6
10
34
28
29
30
31
32
33
25
25
24
22
27
26
23

PARTS LIST

KEY NO.	PARTS NO.	DESCRIPTION
1	743603003	UPPER SHAFT (UNIT)
2	743007001	UPPER SHAFT
3	743008002	TAKE-UP LEVER CRANK
4	000021708	KNOCK PIN
5	102073003	SETSCREW
6	761052007	SETSCREW
7	000036717	THRUST WASHER
8	732025001	UPPER SHAFT FRONT BUSHING
9	639095000	RING
10	000111304	HEXAGONAL SOCKET SCREW 5X5
11	751146008	WORM
12	553245008	HEXAGONAL SOCKET SCREW 4X4
13	000003601	SPRING PIN
14	731312005	FELT
15	743604004	CRANK ROD (UNIT)
16	743010007	FEED CAM
17	743011008	CRANK ROD
18	639033000	CRANK CAM
19	639102012	CRANK CAM PLATE
20	000150501	TAPPING SCREW 3X14B
21	000110107	HEXAGON SOCKET SCREW 5X5
22	732003003	UPPER SHAFT REAR BUSHING
23	000172602	SETSCREW 5X8
24	743029009	FELT
25	000030205	SNAP RING E-8
26	743019006	BELT WHEEL
27	000023803	SPRING PIN
28	302604005	HANDWHEEL (UNIT)
29	302007002	HANDWHEEL
30	743030003	BALANCE WEIGHT
31	000121400	TAPPING SCREW 3X14B
32	639113016	CLUTCH SPRING
33	000081005	SETSCREW 4X8
34	645070509	CLUTCH CAP

PARTS LIST

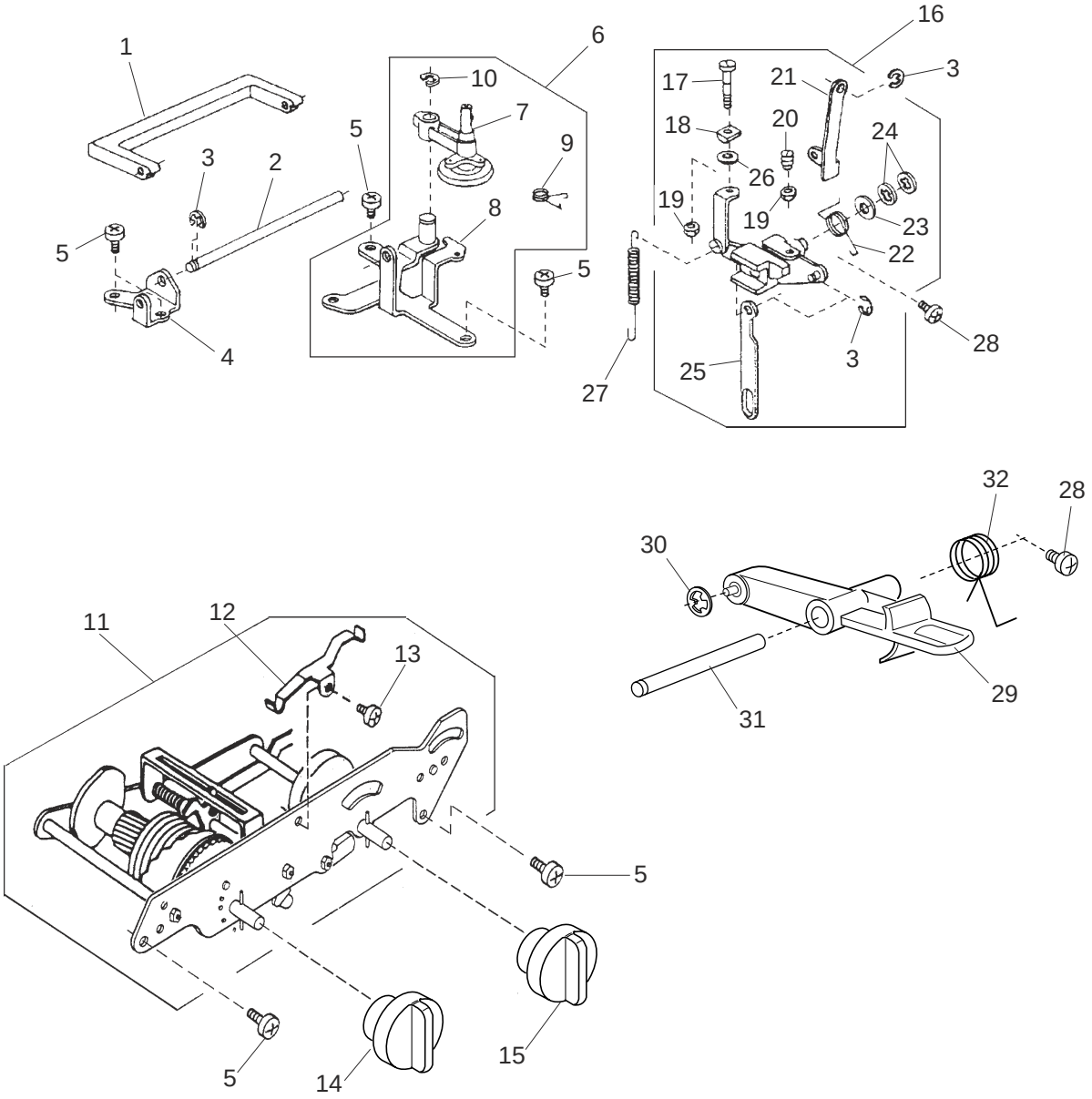
1
2
3
4
5
6
7
8
9
10
11
12
13
14
15
16
17
18
19
20
21
22
23
24
25
26
27
28
29
30
31
32

PARTS LIST

KEY NO.	PARTS NO.	DESCRIPTION
1	302006001	HANDLE
2	740011009	HANDLE SHAFT
3	000002105	SNAP RING E-3
4	740010008	HANDLE SUPPORTER
5	000081005	SETSCREW 4X8
6	740602209	BOBBIN WINDER BASE PLATE (UNIT)
7	735501005	BOBBIN WINDER ARM (UNIT)
8	740003101	BOBBIN WINDER BASE PLATE
9	740042009	BOBBIN WINDER ARM SPRING
10	000002806	SNAP RING E-6
11	745606013	ZIGZAG MECHANISM UNIT
12	737011009	INDEX SPRING
13	000103808	SETSCREW 3X5
14	302009004	PATTERN SELECTOR DIAL
15	302009004	STITCH LENGTH DIAL
16	736604105	FEED REGULATOR (UNIT)
17	735074004	SS ADJUSTING SCREW
18	735076006	SS ROD BLOCK
19	000160102	ADJUSTABLE LOCK NUT 4
20	648010009	SETSCREW
21	739020007	FEED REGULATING ROD
22	735077007	FEED REGULATING BODY SPRING
23	735073003	PLAIN WASHER
24	000013800	SNAP RING CS-6
25	745052007	REVERSE LINK
26	000071013	WASHER
27	740125001	FEED REGULATOR SPRING
28	000101301	SETSCREW 5X10
29	302008003	R BUTTON
30	000014007	SNAP RING CS-4
31	736015000	R BUTTON SHAFT
32	739063002	R BUTTON SPRING

PARTS LIST

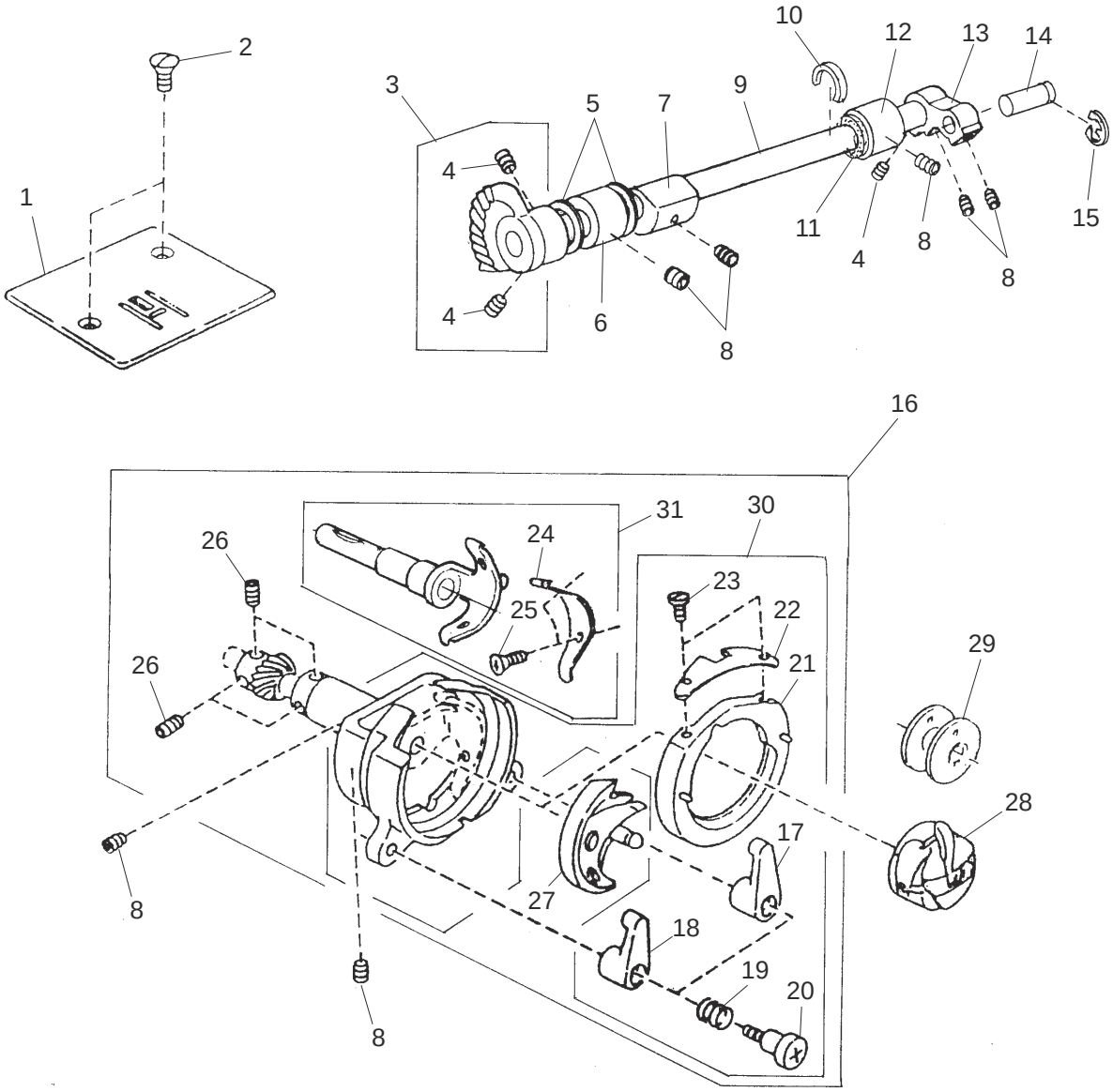
1
2
3
4
4
5
6
7
8
8
8
9
10
11
12
13
14
15
16
17
18
19
20
21
22
23
24
25
26
26
27
28
29
30
31
8
8

PARTS LIST

KEY NO.	PARTS NO.	DESCRIPTION
1	744004001	NEEDLE PLATE
2	681009101	SETSCREW
3	735950003	LOWER SHAFT GEAR (UNIT)
4	000110107	HEXAGON SOCKET SCREW 5X5WP
5	000036201	WASHER 8-0.5
6	735233003	BUSHING
7	735061008	FEED LIFTING CAM
8	000111304	HEXAGON SOCKET SCREW 5X5
9	735236006	LOWER SHAFT
10	735239009	FELT HOLDER
11	822070003	FELT
12	735234004	BUSHING
13	639036003	LOWER SHAFT CRANK ARM
14	639037004	PIN
15	000001609	SNAP RING E-5
16	735610101	SHUTTLE RACE BODY (UNIT)
17	605065006	SHUTTLE RACE RING CLASP (RIGHT)
18	605066007	SHUTTLE RACE RING CLASP (LEFT)
19	639108007	SHUTTLE RACE RING CLASP SPRING
20	673290003	HINGE SCREW
21	553168006	SHUTTLE RACE RING
22	601801000	SHUTTLE RACE SPRING
23	102100000	SETSCREW
24	670286007	SHUTTLE DRIVER SPRING
25	102202003	PLAIN SCREW
26	553245008	HEXAGONAL SOCKET SCREW
27	532096007	SHUTTLE HOOK
28	647515006	BOBBIN CASE (UNIT)
29	102261000	BOBBIN
30	735508105	SHUTTLE RACE BODY (UNIT)
31	735509003	DRIVER BODY (UNIT)

PARTS LIST

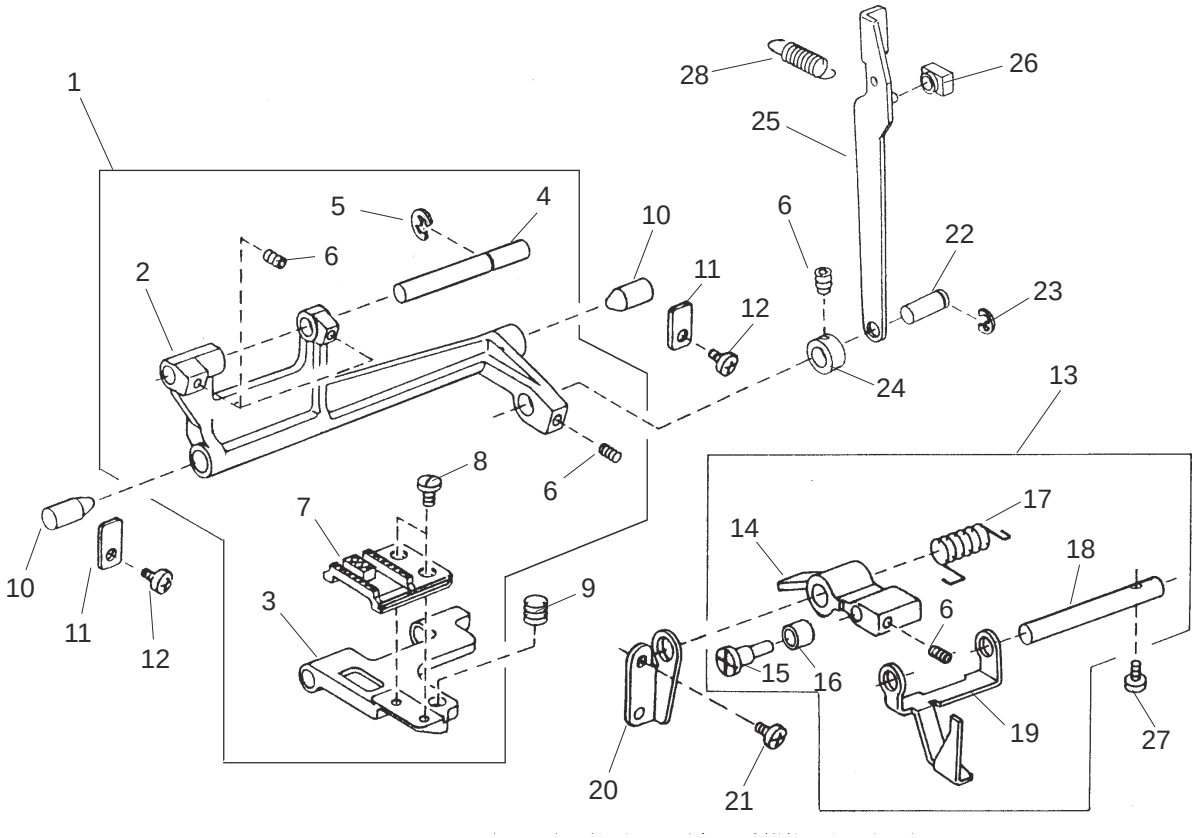

PARTS LIST

KEY NO.	PARTS NO.	DESCRIPTION
1	735612000	FEED ROCK SHAFT (UNIT)
2	735078008	FEED ROCK SHAFT
3	735079009	FEED BAR
4	735080003	FEED BAR SHAFT
5	000002507	SNAP RING E-4
6	000111201	HEXAGON SOCKET SCREW
7	735081004	FEED DOG
8	735082005	SETSCREW
9	735083006	FEED BAR SPRING
10	735084007	FEED ROCK SHAFT CENTER
11	735085008	FEED ROCK SHAFT CENTER PLATE
12	000101404	SETSCREW 4X6
13	301609007	FEED LIFTING ARM (UNIT)
14	301027005	FEED LIFTING ARM
15	735087000	FEED LIFTING PIN
16	735088001	FEED LIFTING ROLLER
17	730061003	FEED LIFTING SPRING
18	735090006	FEED LIFTING SHAFT
19	740013001	DROP FEED SELECTING PLATE
20	739022009	FEED LIFTING SHAFT HOLDER
21	000081119	SETSCREW 4X6
22	735071001	FEED ROCK SHAFT CONNECTING PIN
23	000002806	SNAP RING E-6
24	735276008	RING
25	743012009	FEED ROD
26	102141003	FEED REGULATOR SLIDE BLOCK
27	000101703	SETSCREW 4X12
28	743013000	FEED ROD SPRING

PARTS LIST

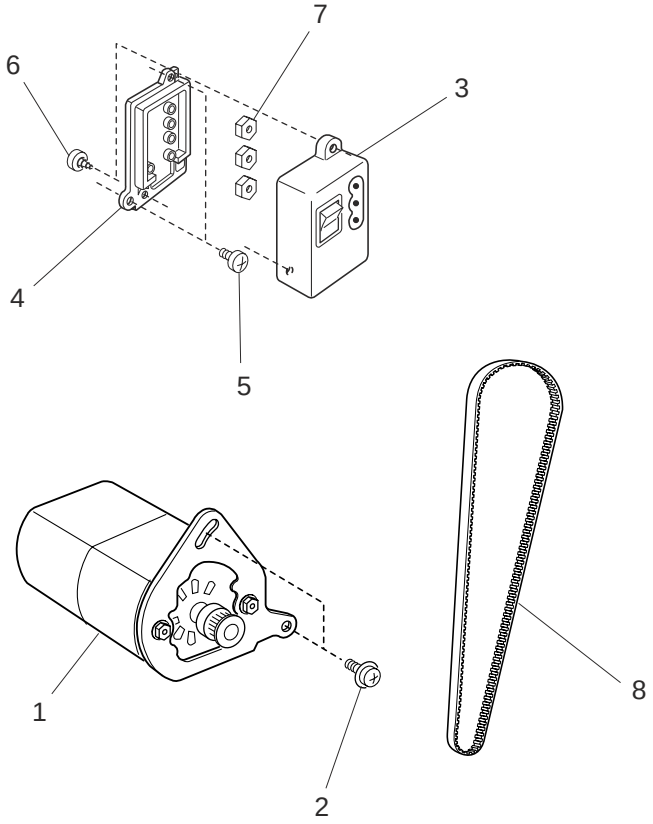

PARTS LIST

KEY NO.	PARTS NO.	DESCRIPTION
1	743611107	MOTOR ASSY
2	000201209	SETSCREW 5X12
3	739503308	MACHINE SOCKET (UNIT)
4	739037007	MACHINE SOCKET COVER
5	000103509	SETSCREW 4X10
6	000107802	SETSCREW 3X10
7	000060802	NUT
8	650166008	MOTOR TIMING BELT

PARTS LIST

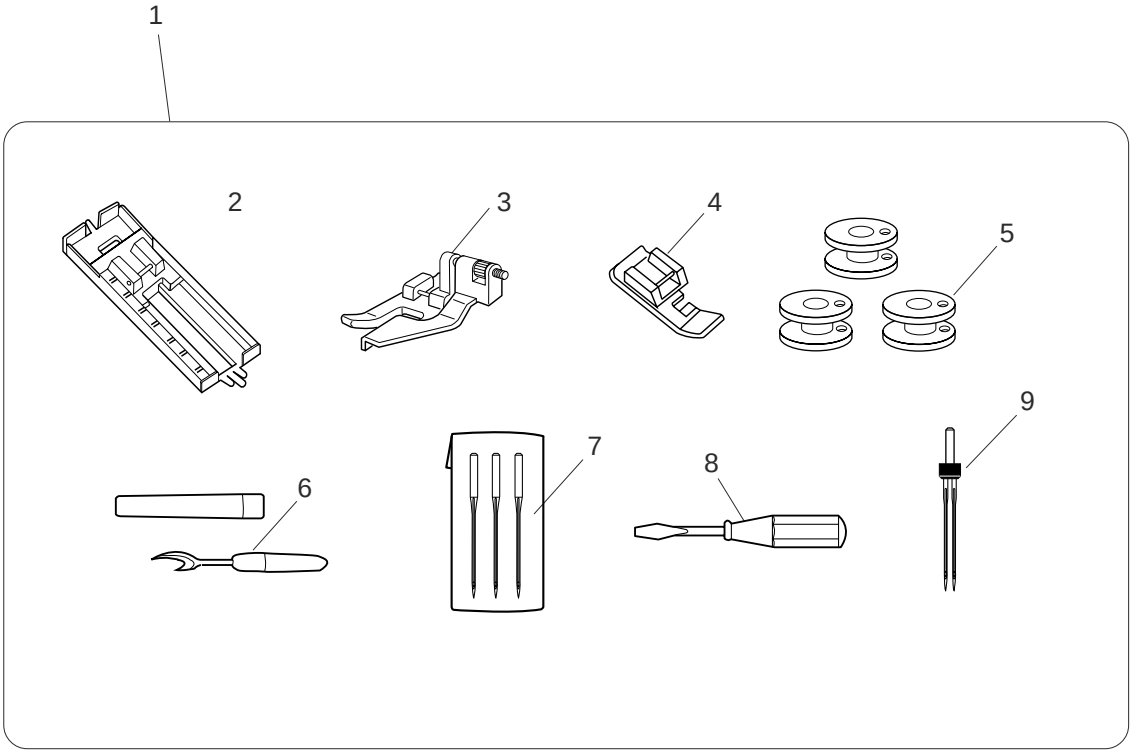

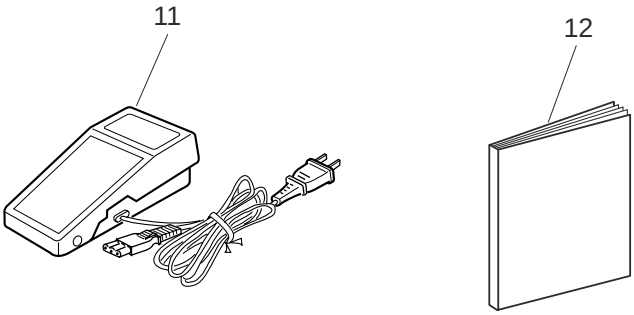

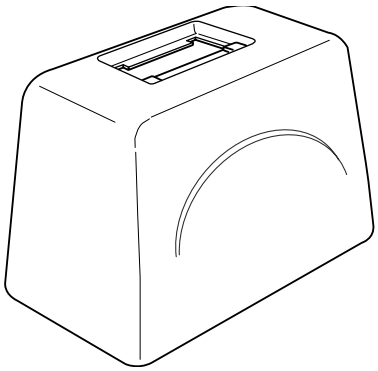

PARTS LIST

KEY NO.	PARTS NO.	DESCRIPTION
1	302870406	ACCESSORY SET
2	611413002	BUTTONHOLE FOOT
3	611411000	BLIND HEM STITCH FOOT
4	611406002	ZIPPER FOOT
5	102261000	BOBBIN
6	647808009	SEAM RIPPER
7	639804000	NEEDLE SET
8	647803004	SCREW DRIVER (SMALL)
9	302804007	TWIN NEEDLE
10	042870308	FOOT CONTROL
11	302800346	INSTRUCTION BOOK
12	743812203	HARD COVER