SERVICE MANUAL

Memory Craft 6500

PROFESSIONAL

JANOME

TABLE OF CONTENTS

To remove face plate and top cover 1
To remove tbelt cover and machine base 2
To remove auto thread cutter cover 3
To remove front cover 4
To remove cover 5
To remove thread guide 6
To remove circuit board “A” and fuse 7
To remove circuit board “K” 8
To remove tcircuit board “F” and speed control lever 9
Connection of connectors 10
To adjust needle drop 11
To adjust hook timing 12
To adjust needle bar height 13
To adjust clearance between needle and rotary hook 14
To adjust backlash between hook drive gear and lower shaft gear 15
To adjust presser bar (direction and height) 16
To adjust feed dog height 17
To remove needle thread tension unit 18
To adjust tension release mechanism (1) 19
To adjust tension release mechanism (2) 20
To adjust needle thread tension 21
To adjust bobbin winder 22
To adjust needle threader plate 23
To remove auto-thread cutter (new type) 24
To remove auto-thread cutter (old type) 25
To adjust sliding plate position 26
To adjust thread supply control lever 27
Setting position of thread take up lever 28
To adjust the upper shaft declutch device 29
Setting positions of parts on lower shaft 30
Setting positions of upper and lower shafts 31
To remove DC motor and belt tension adjustment 32
To adjust zigzag timing 33
To adjust buttonhole lever position 34
To adjust stretch stitch feed balance 35
To adjust presser foot lifter switch position 36
To adjust switch position of auto thread cutter 37
To adjust position of solenoid for upper shaft declutch device 38
To adjust postion of solenoid for auto thread cutter 39
To adjust position of solenoid for bobbin idling prevension lever 40
Self-diagnosis chart ..... 41 – 45

TO REMOVE FACE PLATE AND TOP COVER

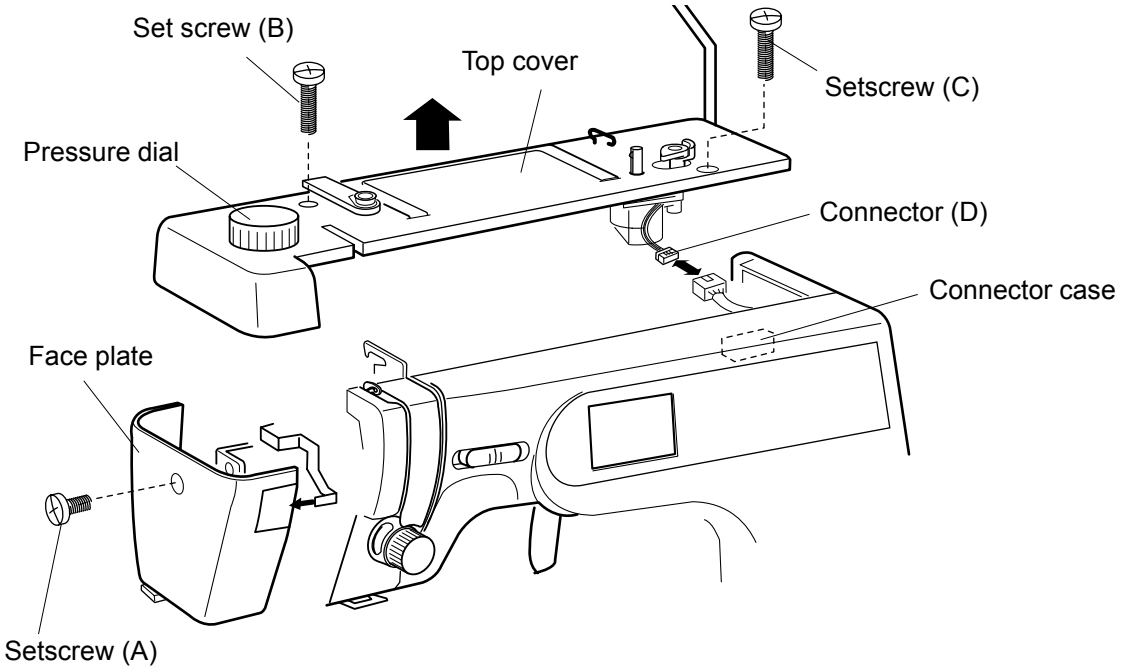

Face plate

[To remove]

Remove the setscrew (A) to remove the face plate.

[To attach]

Attach the face plate with the setscrews (A).

Top cover

[To remove]:

1. Remove the setscrews (B) and (C).
2. Pull out the connector (D) of the bobbin winder and remove the top cover.

[To attach]:

3. Connect the connector of the bobbin winder and tighten the setscrews (B) and (C).

TO REMOVE BELT COVER AND MACHINE BASE

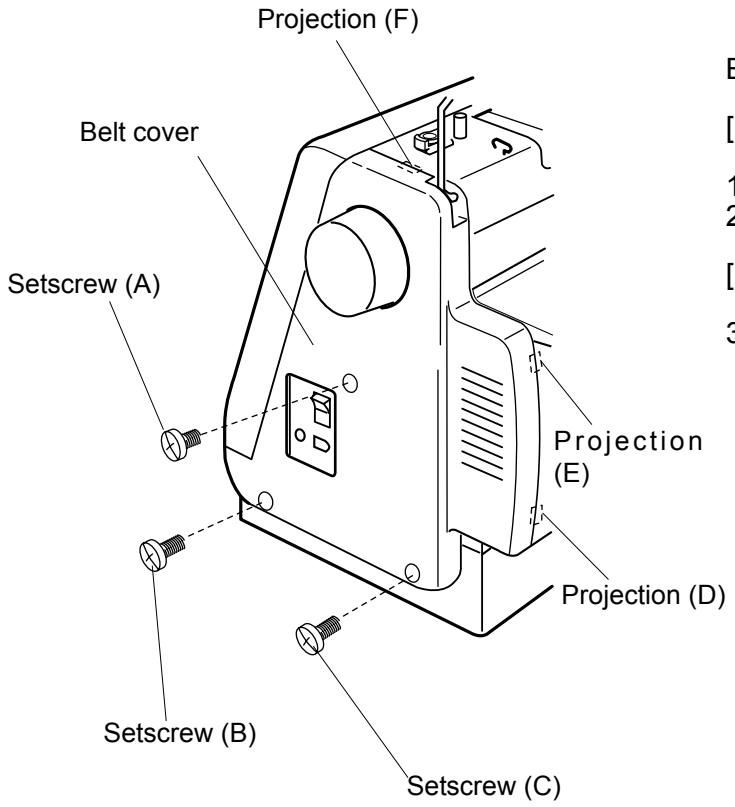

Belt cover

[To remove]:

1. Remove the setscrews (A), (B) and (C).
2. Remove the belt cover

[To attach]:

3. Insert the projections (D), (E) and (F) and tighten the setscrews (A), (B) and (C).

Machine base

[To remove]:

Remove the 3 setscrews (A), (B) and (C)

[To attach]

Attach the machine base with the 3 setscrews (A), (B) and (C).

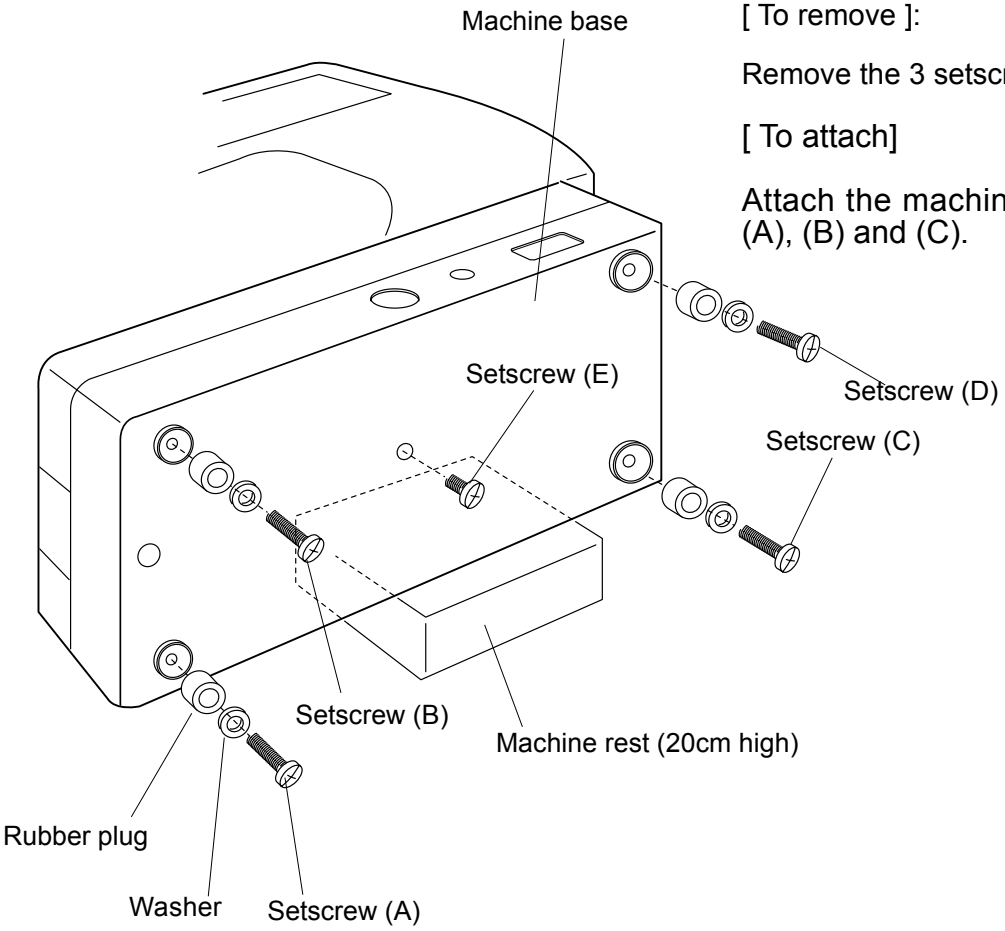

TO REMOVE AUTO THREAD CUTTER COVER

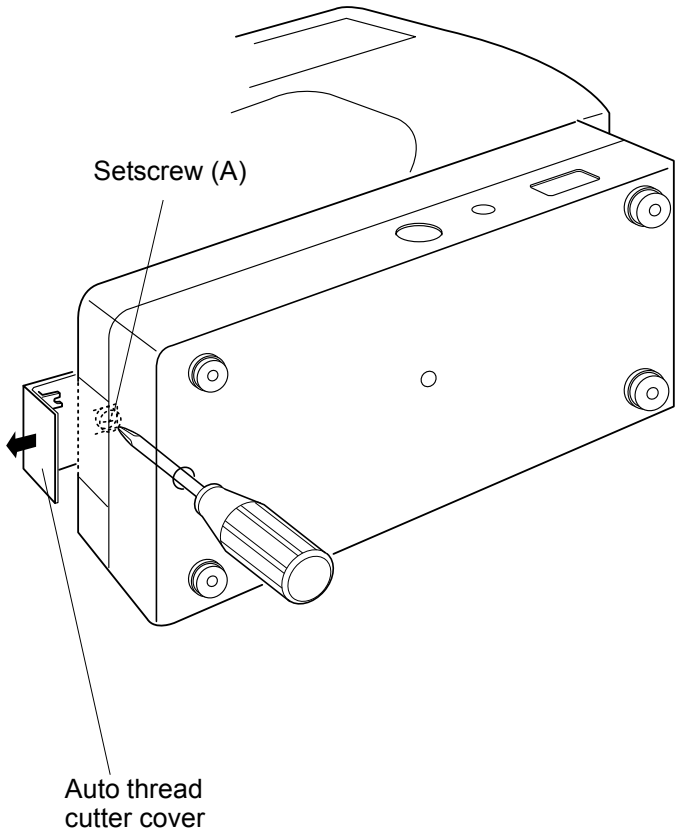

[To remove]:

Loosen the setscrew (A) and pull off the auto thread cutter cover.

[To attach]:

Replace the auto thread cutter cover and tighten the setscrew (A).

TO REMOVE FRONT COVER

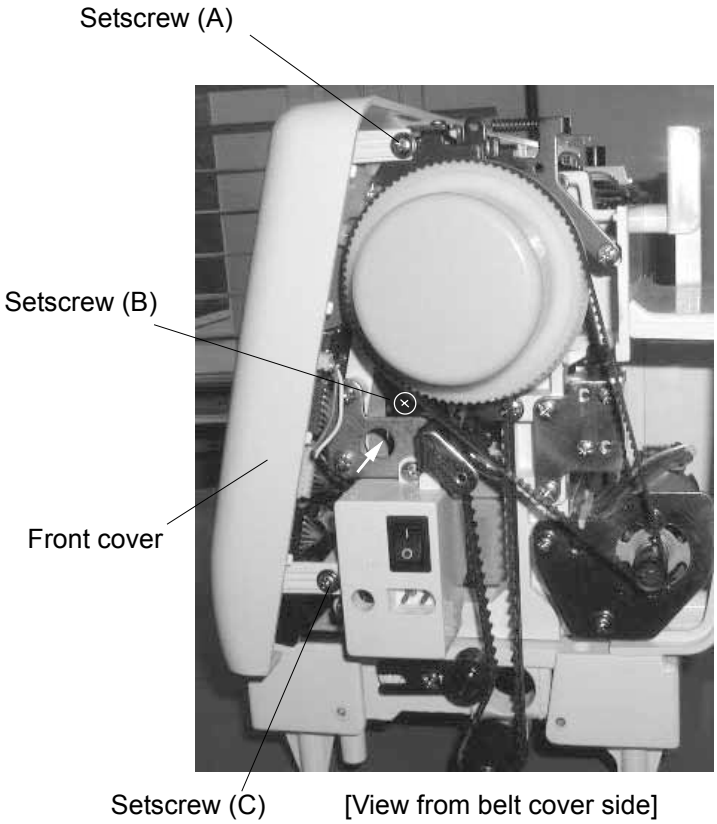

[To remove]:

1. Remove the face plate, top cover and belt cover (refer to pages 1 and 2).
2. Loosen the setscrews (A), (B), (C) and (D).
3. Pull out the connectors (refer to page 22) and remove the front cover.

[To attach]:

4. Proceed with the above procedure in reverse.

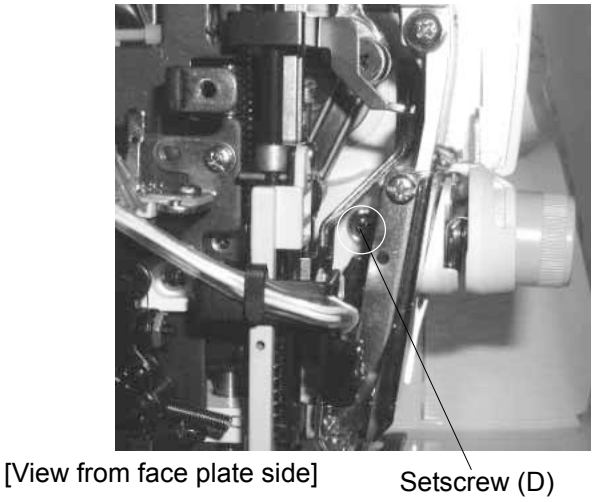

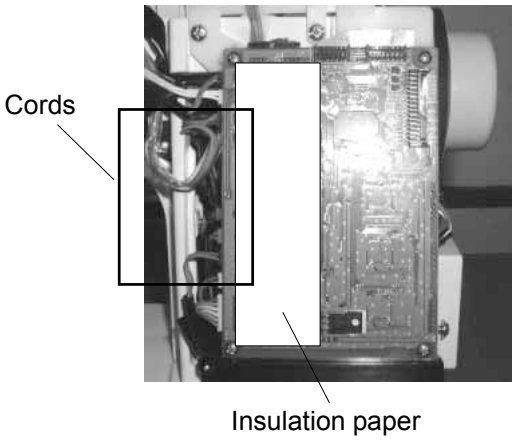

When attaching the front cover, ensure that the cords shown in the photo on the left do not get caught between the cover and the parts.

TO REMOVE COVER

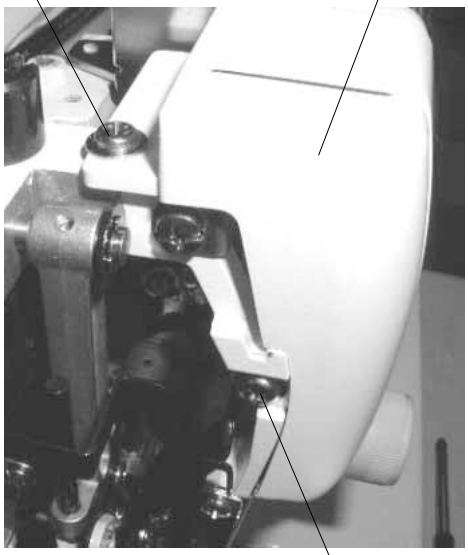

[To remove]

1. Remove the face plate and top cover (refer to page 1).
2. Loosen the setscrews (A) and (B). Remove the cover (D).

[To attach]

Reverse the above procedure.

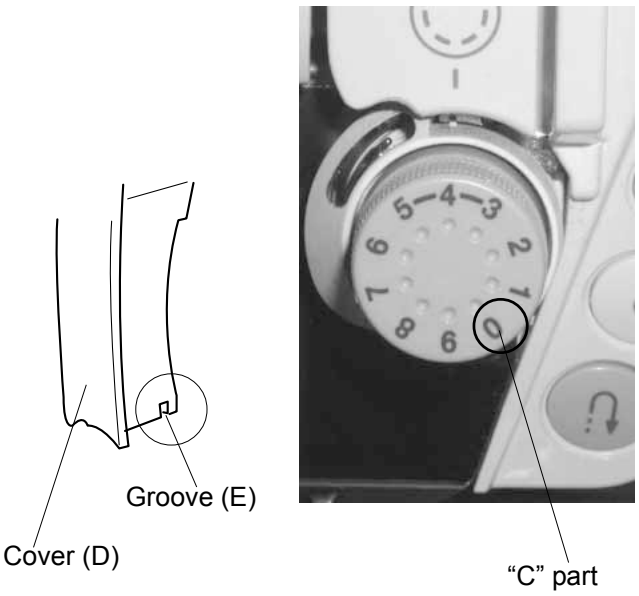

* Take care when removing and attaching the cover, as the right hand side of cover is held in position by the "C" part slipping into the groove (E) of the cover (D).

TO REMOVE THE THREAD GUIDE

[To remove]

Remove the face plate, and tilt the lamp socket (E) to the left.
Remove the setscrews (A), (B) and (C), and remove the thread guide (D).

[To attach]

Reverse the above procedure.

TO REPLACE CIRCUIT BOARD A AND FUSE

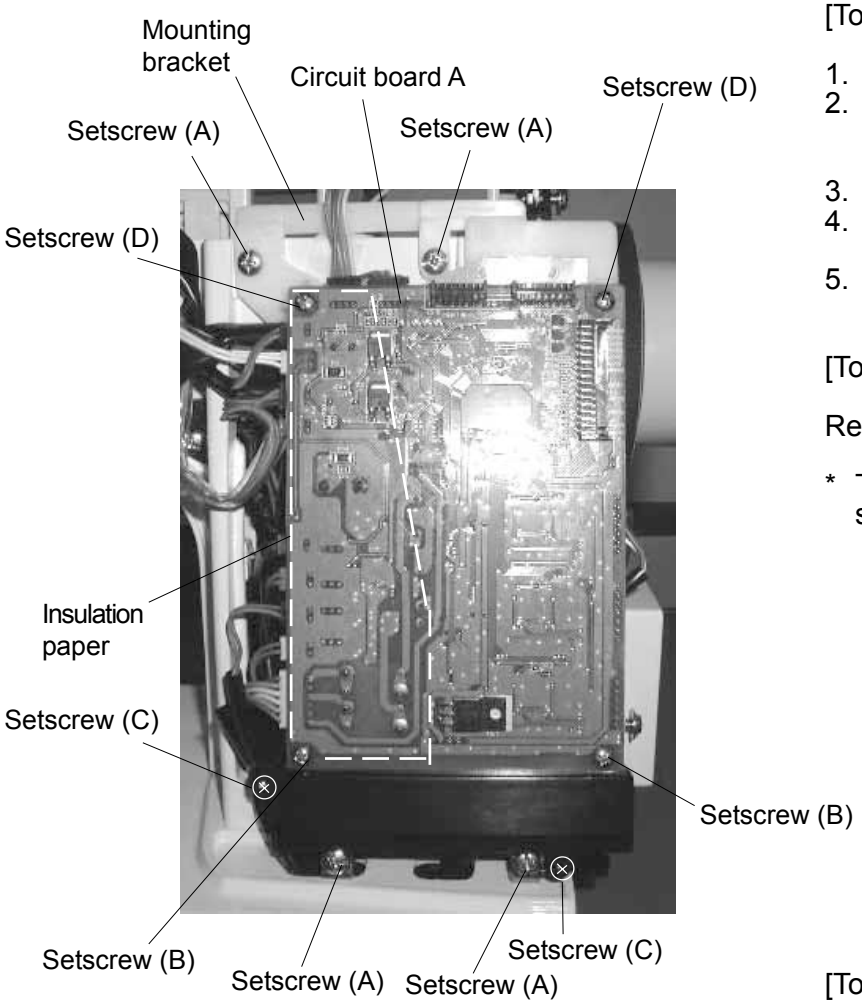

[To remove]

1. Remove the front cover (refer to page 4).
2. Remove the 4 setscrews (A).
   Remove the circuit board A together with the mounting bracket.
3. Remove the 2 setscrews (D).
4. Remove the 2 setscrews (B) and 2 setscrews (C).
5. Remove the circuit board A and lid.

[To attach]

Reverse the above procedure.

* The shiny side of the insulation paper should face the circuit board A

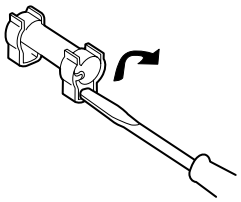

[To change the fuse]

1. Remove the 2 setscrews (B) and 2 setscrews (C).
2. Remove the circuit board A and lid.
3. Pry the fuse out with a screwdriver as shown.

If the fuse is loose, bend the fuse holder with your fingers.

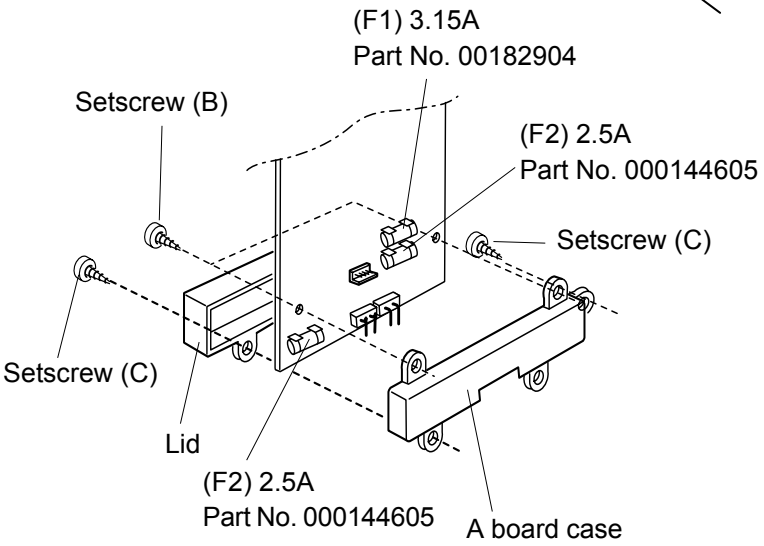

TO REPLACE CIRCUIT BOARD K

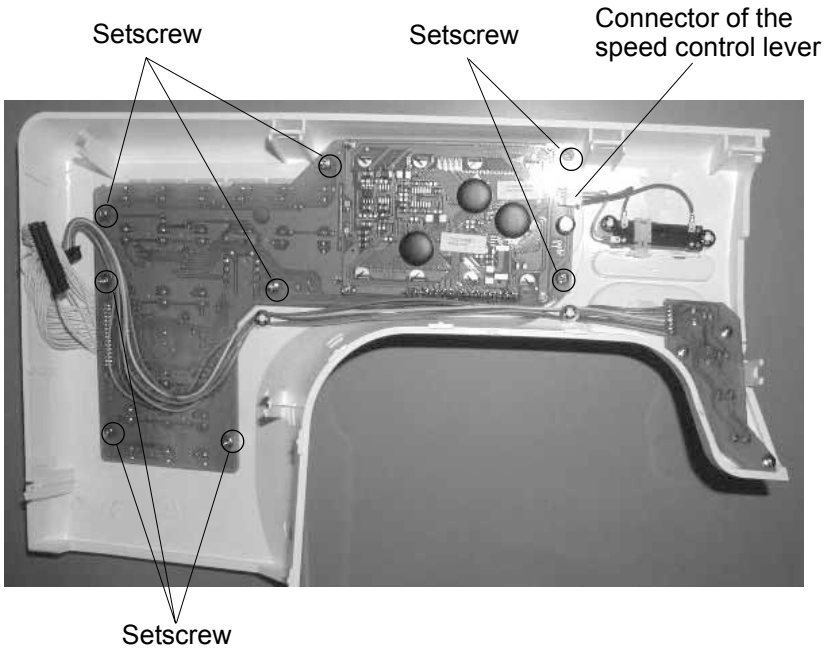

[To remove]

1. Remove the front cover (refer to page 4).
2. Pull out the connector of the speed control lever.
3. Remove the 8 setscrews.

[To attach]

Reverse the above procedure.

TO REPLACE CIRCUIT BOARD F AND SPEED CONTROL LEVER

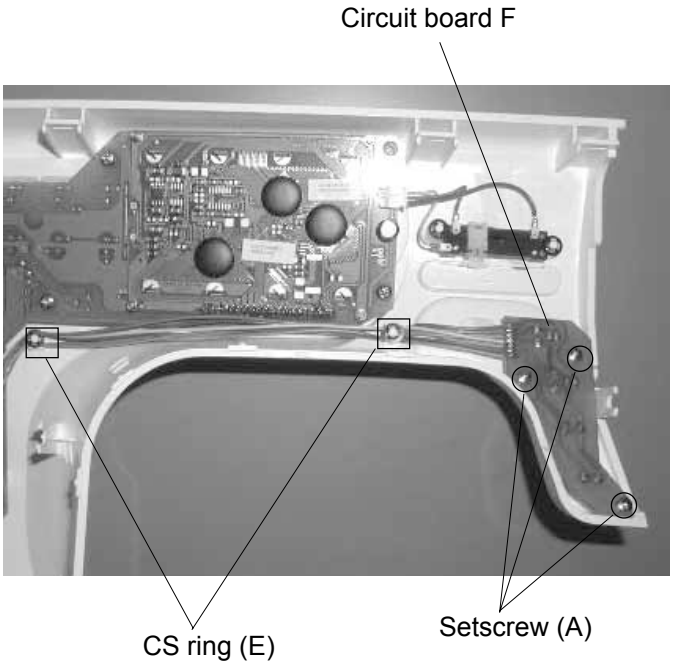

[To remove the circuit board F]

1. Remove the front cover (refer to page 4).
2. Pull out the connector from the circuit board A. (refer to page 8).
3. Remove the 3 setscrews (A) and 2 CS rings (D).

[To attach]

Reverse the above procedure.
Make sure that the buttons are placed in the correct places and direction.

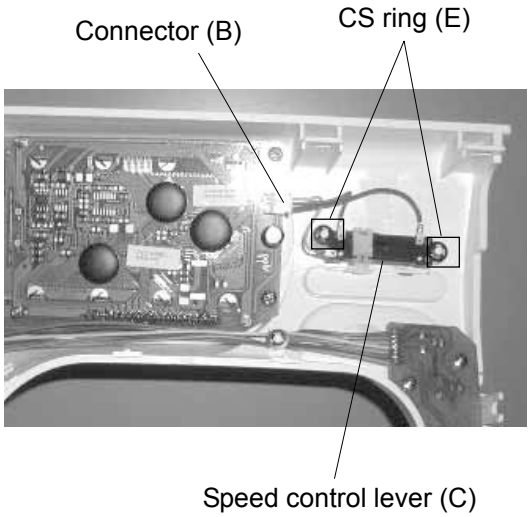

[To remove the speed control lever]

1. Remove the front cover (refer to page 4).
2. Pull out the connector (B) from the circuit board K.
3. Remove the 2 CS rings (E), and remove the speed control lever (C).

[To attach]

Reverse the above procedure.

CONNECTION OF CONNECTORS

Lower shaft sensor
(black 5 pins)

Bobbin winder
(black 4 pins)

Circuit board F
(black 7 pins)

Presser bar switch
(black 2 pins)

Lamp
(white 2 pins)

Buttonhole sensor
(black 3 pins)

Auto thread cutter switch
(red 2 pins)

CIRCUIT BOARD A

Circuit board K
(black 32 pins)

Foot control
(white 2 pins)

Drop feed switch
(blue 2 pins)

Motor for thread
tension release
(red 7 pins)

Separation solenoid
(red 2 pins)

DC motor
(white 5 pins)

Zigzag stepping
motor
(white 7 pins)

Bobbin solenoid
(black 2 pins)

Auto thread cutter
solenoid (white 2 pins)

Feed stepping
motor
(black 7 pins)

Transformer
(secondary)
(red 6 pins)

Transformer
(primary)
(black 2 pins)

Machine socket
(white 2 pins)

Circuit board K

Speed control lever

Circuit board F

Connector to circuit
board K

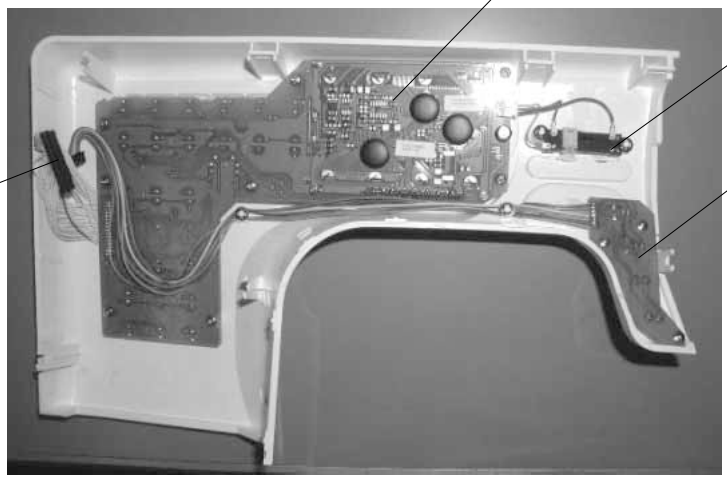

TO ADJUST NEEDLE DROP POSITION

When the straight stitch is selected, the needle should be at the center of the hole of the needle plate. When the maximum zigzag width is selected, the distance between the needle and the edge of the hole of the needle plate at the right and left needle positions should be 0.2mm or more as shown in Fig. 2.

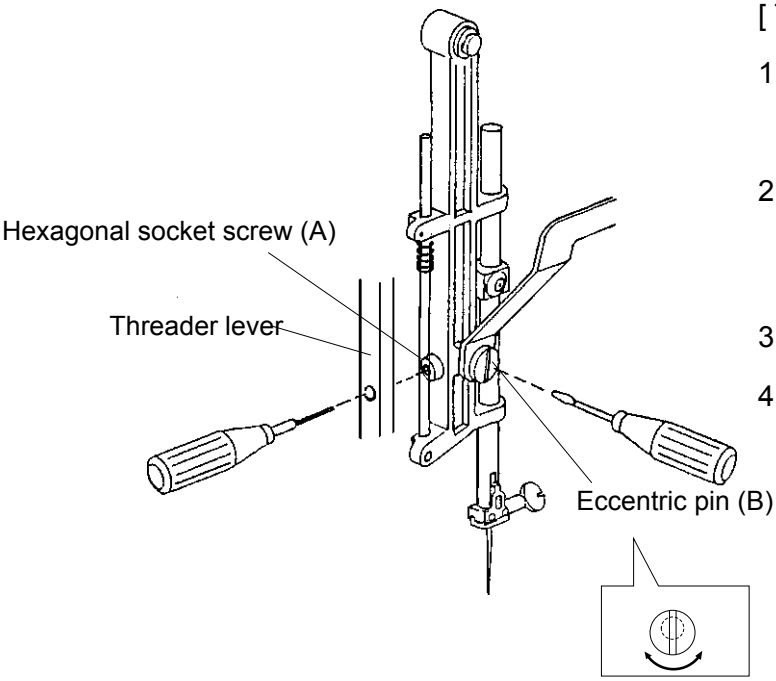

Fig. 1

[To adjust]:

1. Remove the face plate.
   Check the needle drop position on the stitch pattern ( ) and zigzag stitch ( ) with maximum width.
2. Loosen the hexagonal socket screw (A) just enough to turn the eccentric pin (B).
   The direction of the eccentric pin (B) should be as shown in the Fig. 1.
3. Tighten the hexagonal socket screw (A).
4. Attach the face plate.

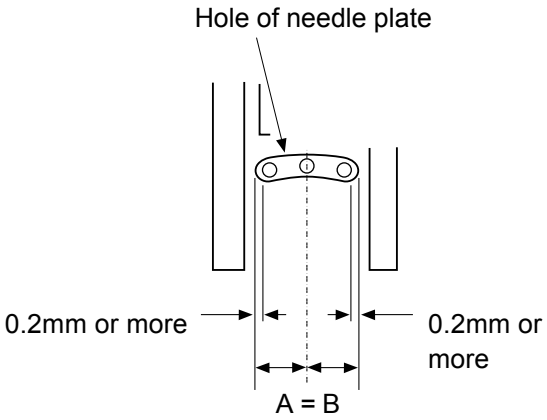

Fig. 2

TO ADJUST HOOK TIMING

The movement of the needle from its lowest point to its highest point should be in the range of 3.25 to 3.55mm.

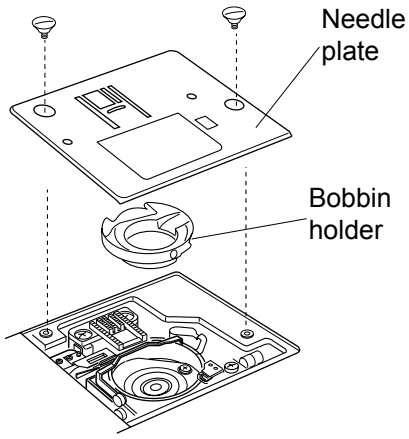

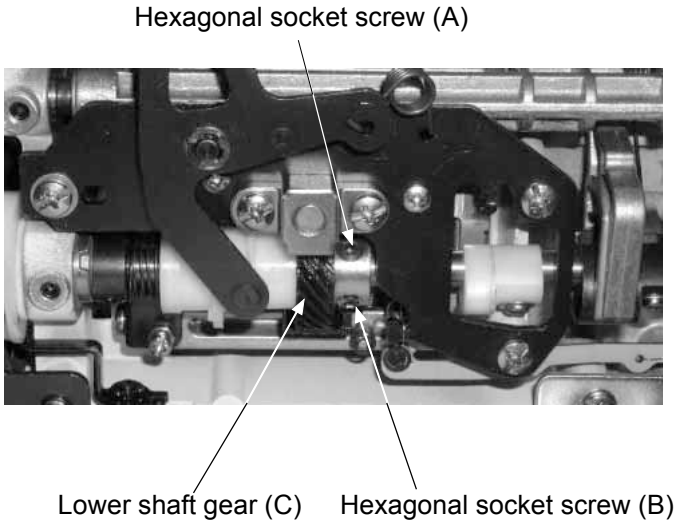

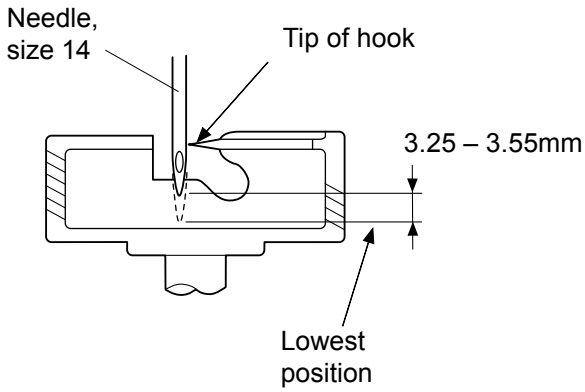

[To adjust]:

1. Remove the machine base (refer to page 2)
2. Turn the power switch on and select stitch pattern No. 2 ( ) in mode 1.
3. Set the zigzag width at 0 and turn the power switch off.
4. Remove the presser foot, needle plate and bobbin holder.
5. Turn the balance wheel toward you to set the needle bar at its lowest position.
6. Loosen the hexagonal socket screws (A) and (B) on the lower shaft gear (C).
7. Move the needle bar between 3.25mm and 3.55mm from the lowest position.
8. Turn the lower shaft gear (C) until the tip of the hook meets the right side of the needle.
9. Tighten the hexagonal socket screws (A) and (B).
10. Attach the bobbin holder, needle plate and presser foot.
11. Attach the machine base.

TO ADJUST NEEDLE BAR HEIGHT

Before proceeding with this adjustment, check the hook timing (refer to page 12).
The distance between the upper edge of the needle eye and the tip of the hook should be in the range of 1.6 – 2.0mm when the tip of the hook meets the right side of the needle in the left needle position ( ) as the needle ascends from its lowest position.

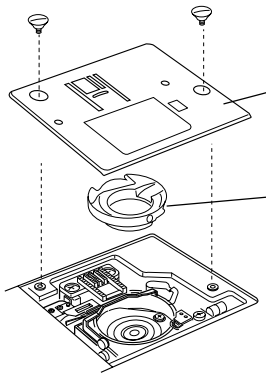

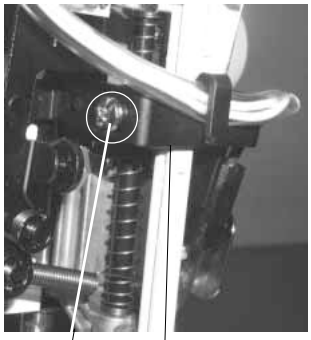

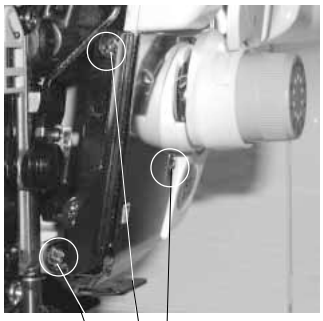

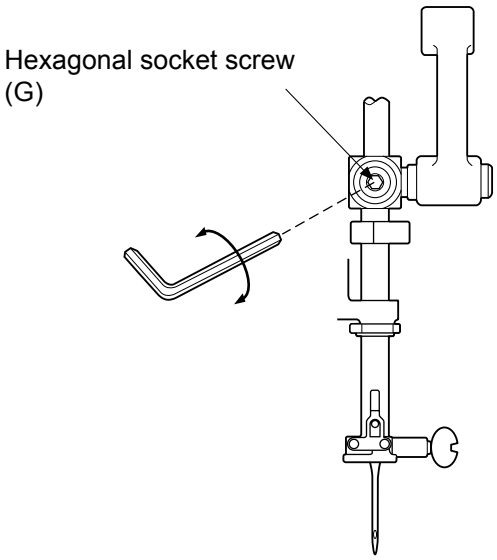

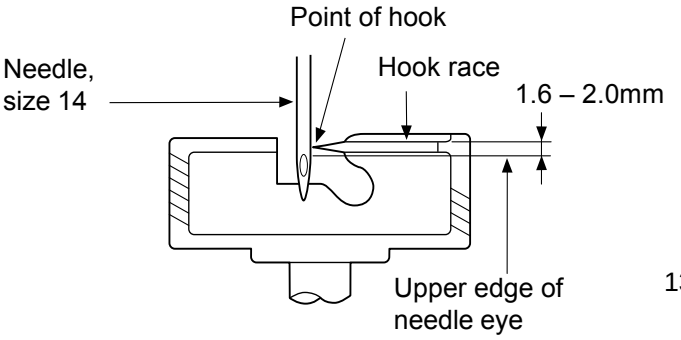

[To adjust]:

1. Turn the power switch on and select stitch pattern No. 2 ( ) in mode 1.
2. Set the zigzag width at 0 and turn the power switch off.
3. Remove the presser foot, needle plate (A), bobbin holder (B) and face plate
4. Remove the set screw (C), and remove the lamp set plate.
5. Remove the arm thread guide and face plate guide by removing the set screws (D), (E) and (F).
6. Turn the balance wheel toward you until the tip of the hook meets the right side of the needle.
7. Loosen the hexagonal socket screw (G).
8. Move the needle bar to adjust the needle bar height, and tighten the hexagonal socket screw (G). Be careful not to turn the needle bar.
9. Fix the arm thread guide and face plate guide.
10. Attach the face plate.

TO ADJUST CLEARANCE BETWEEN NEEDLE AND ROTARY HOOK

The clearance between needle and the tip of the rotary hook (J) should be between –0.1 and +0.05mm.

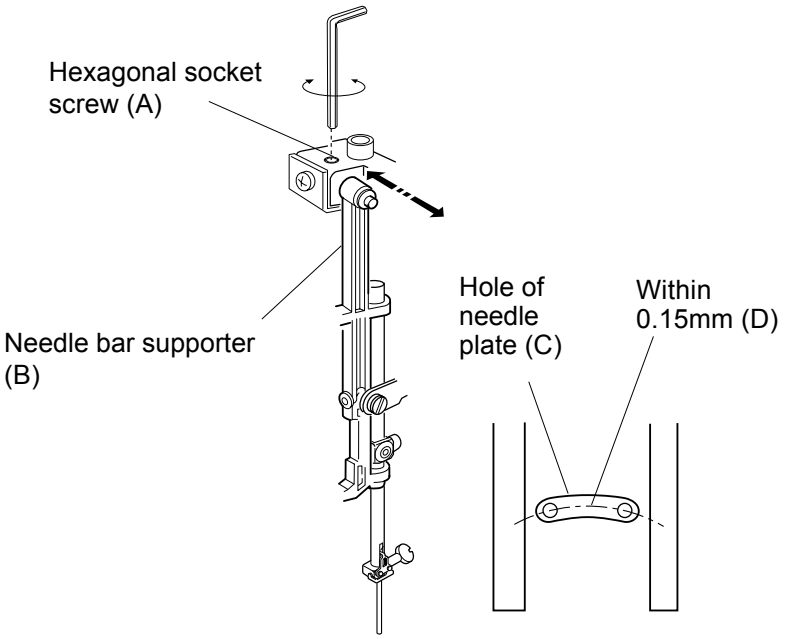

[Adjustment I]

1. Remove the face plate, and attach a master needle (I).
2. Turn the power switch on.
3. Select the stitch pattern and set the zigzag width at “7”.
4. Remove the presser foot, needle plate and bobbin holder.
5. Loosen the hexagonal socket screw (A) and adjust the clearance between the needle and tip of the rotary hook (J) by moving the needle bar supporter (B).
6. Tighten the hexagonal socket screw (A).
7. Attach the presser foot, needle plate and bobbin holder.
   Make sure that the distance between the tip of the needle and the center of the hole of the needle plate (C) is within 0.15mm (D). If not, return the needle bar supporter (B) to the original position and adjust the clearance between the needle and the tip of the rotary hook (J) by using Adjustment II.

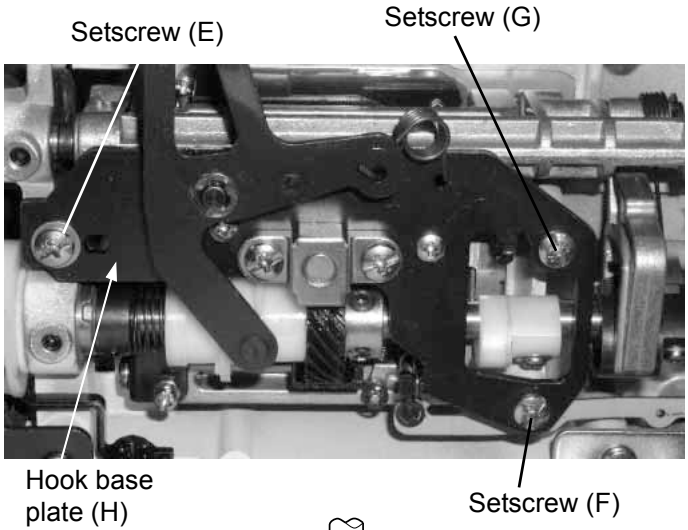

[Adjustment II]

1. Remove the machine base (refer to page 2).
2. Turn the power switch on, and select the stitch pattern .
   Set the zigzag width at “7”.
3. Remove the presser foot, needle plate and bobbin holder.
4. Loosen the setscrews (E) and (F).
   Loosen the setscrew (G) just enough to move the hook base plate (H).
5. Turn the hand wheel toward you and adjust the clearance between the needle and the tip of the rotary hook, by moving the hook base plate up or down, to within –0.1 to +0.05mm at the left and right needle positions.
6. Tighten the setscrews (E), (F) and (G) firmly.
7. Check the backlash between the hook drive and lower shaft gears.
   Refer to page 10 for the adjustment.
8. Attach the machine base, bobbin holder, needle plate and presser foot.

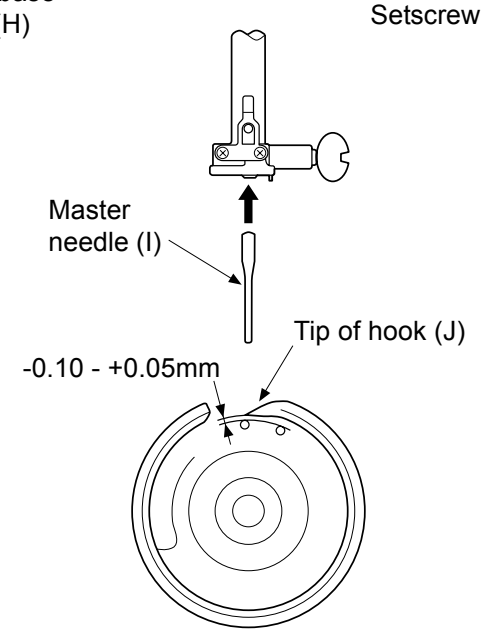

TO ADJUST BACKLASH OF HOOK DRIVE AND LOWER SHAFT GEARS

The gears turns smoothly and rotary play of the hook should be 0.8 mm or less (F) when the tip of hook (E) is within the width of the feed dog (C) as shown below.

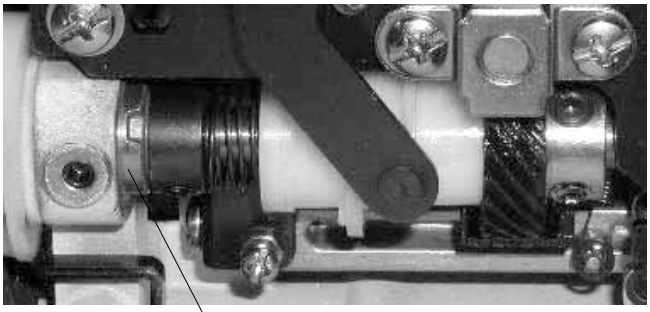

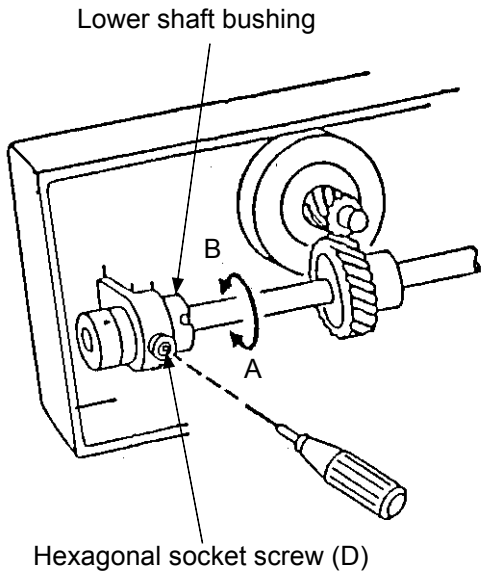

1. Remove the machine base (refer to page 2).
2. Remove the needle, needle plate and bobbin holder.
3. Loosen the hexagonal socket screw (D).
4. If the backlash is too much, turn the lower shaft bushing in direction A.
   If the backlash is too little, turn the lower shaft bushing in direction B.
5. Tighten the hexagonal socket screw (D).
6. Attach the needle, needle plate and bobbin holder.
7. Attach the machine base.

NOTE: After adjusting the backlash, be sure to check and adjust the ”HOOK TIMING” and the “FEED DOG HEIGHT” (refer to pages 10 and 15).

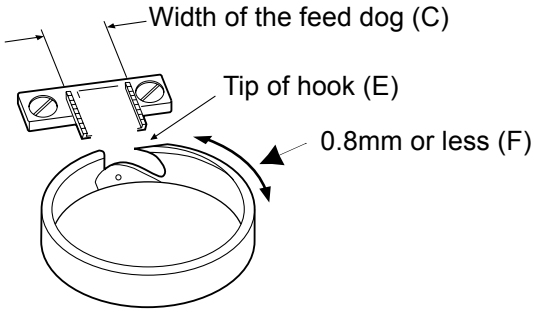

TO ADJUST DIRECTION OF PRESSER BAR AND ITS HEIGHT

When the presser foot is lifted, the distance between the surface of the needle plate and the bottom of the zigzag foot should be 6mm as shown in Fig 1.
When the presser bar is lowered, the presser foot should be parallel with the holes for the feed dogs as shown in Fig. 2.

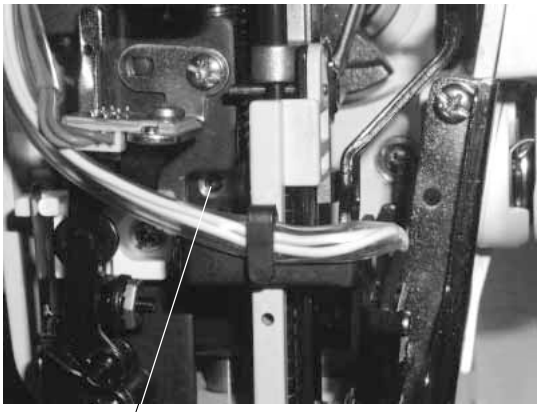

Hexagonal socket screw (A)

[To adjust]:

1. Remove the face plate (refer to page 1).
2. Lift the presser bar.
   Loosen the hexagonal socket screw (A).
   Adjust the direction and height of the presser bar.
3. Attach the face plate.

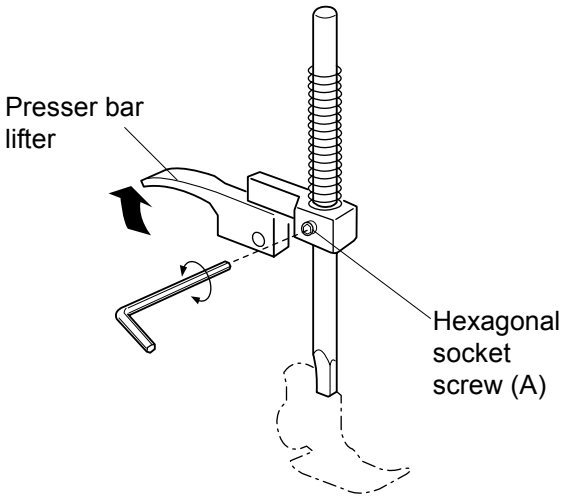

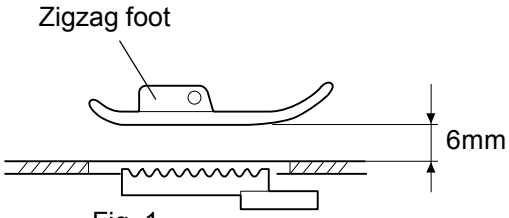

Fig. 1

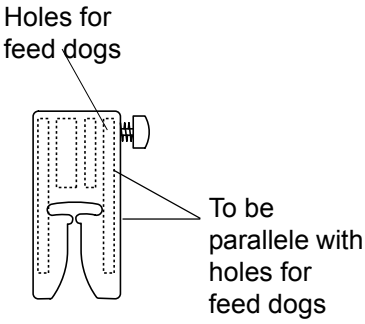

Fig. 2

TO ADJUST FEED DOG HEIGHT

When the pressure adjusting dial is at “3” and the presser foot (A) is lowered, the highest position of the feed dog (B) should be 0.80 to 0.90 mm (C) from the surface of the needle plate (D).

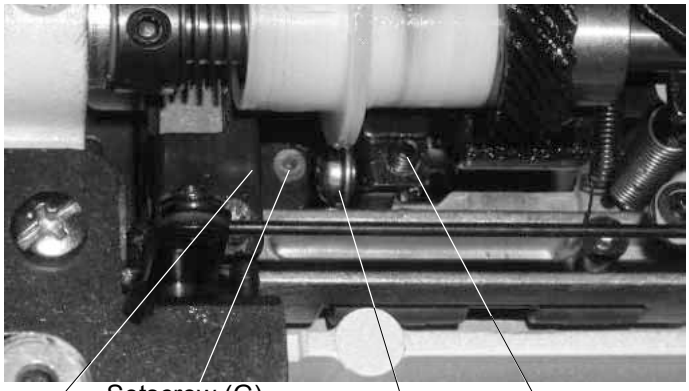

1. Remove the machine base and auto-thread cutter cover.
2. Set the pressure adjusting dial at “3” with the presser foot lowered.
3. Turn the balance wheel toward you to get the highest position of the feed dog.
4. Loosen the setscrew (E).
5. Loosen the nut (F)
6. Adjust the feed dog height to 0.80 mm to 0.90 mm by turning the adjusting screw (G).
7. Tighten the nut (F) and set screw (E).
8. Attach the bed cover.

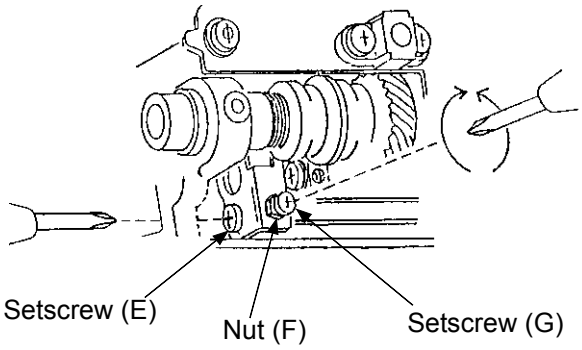

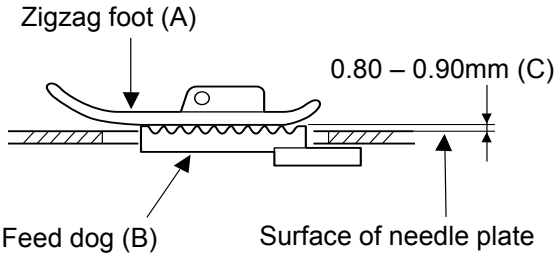

[Parallel of the feed dog]

If the feed dog is not parallel to the surface of the needle plate at its highest position, make the adjustment as follows:

* For this adjustment, a hexagonal socket screw (I), part No. 000111108 is required.

1. Insert a hexagonal socket screw, part No. 000111108 into the threaded hole (J) until it stops.
2. Turn the setscrew (H) clockwise to loosen it.
3. Turn the hexagonal socket screw (I) until the feed dog is parallel with the surface of the needle plate.
4. Tighten the left-handed setscrew (H).
5. Remove the hexagonal socket screw (I).
6. Attach the auto-thread cutter cover and machine base.

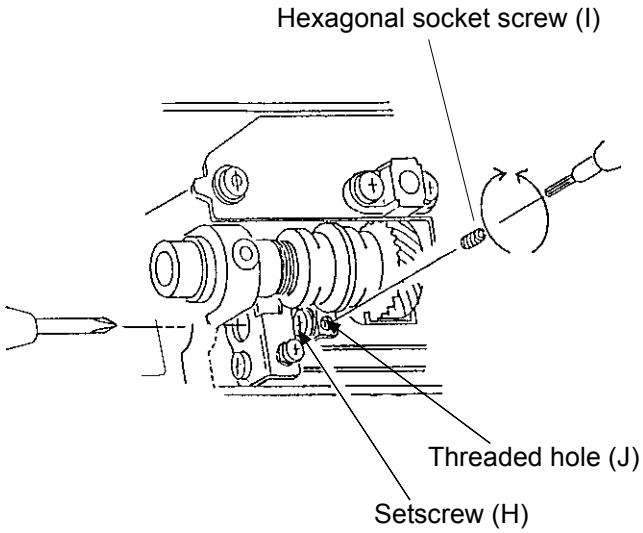

TO REPLACE NEEDLE THREAD TENSION UNIT

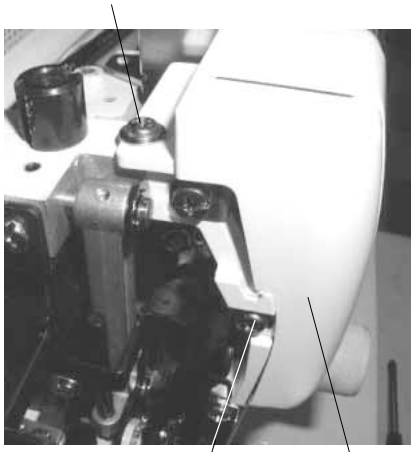

[To remove]:

1. Loosen the screws (A), (B), (C) and (D) on page 4 (it is not necessary to remove the connectors)
2. Remove the face plate.
3. Remove the setscrews (A) and (B).
   Remove the thread guide cover (C).
4. Loosen the hexagonal socket screw (D).
5. Remove the tension release plate (F) from the tension release arm (E).
   Remove the needle thread tension unit (G).

[To attach]:

Reverse the above procedure.

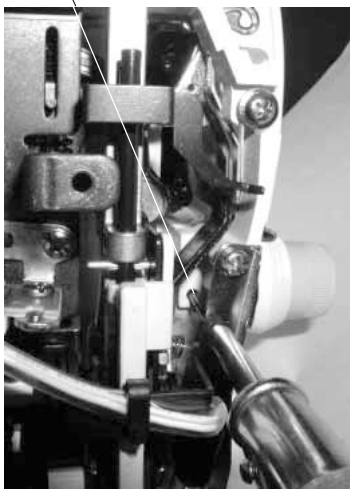

TO ADJUST TENSION RELEASE MECHANISM (1)

When the presser bar lifter is lifted, the opening between the tension discs (D) should be 0.8mm (C).

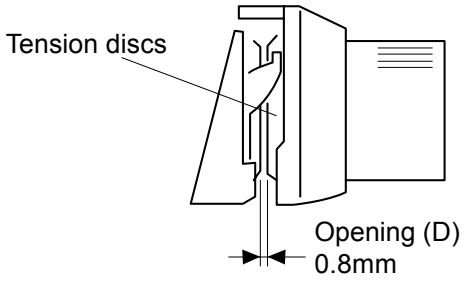

1. Remove the face plate and thread guide (refer to pages 1 and 6).
2. Loosen the setscrew (A).
3. Adjust the opening by turning the eccentric pin.
4. Tighten the setscrew (A).

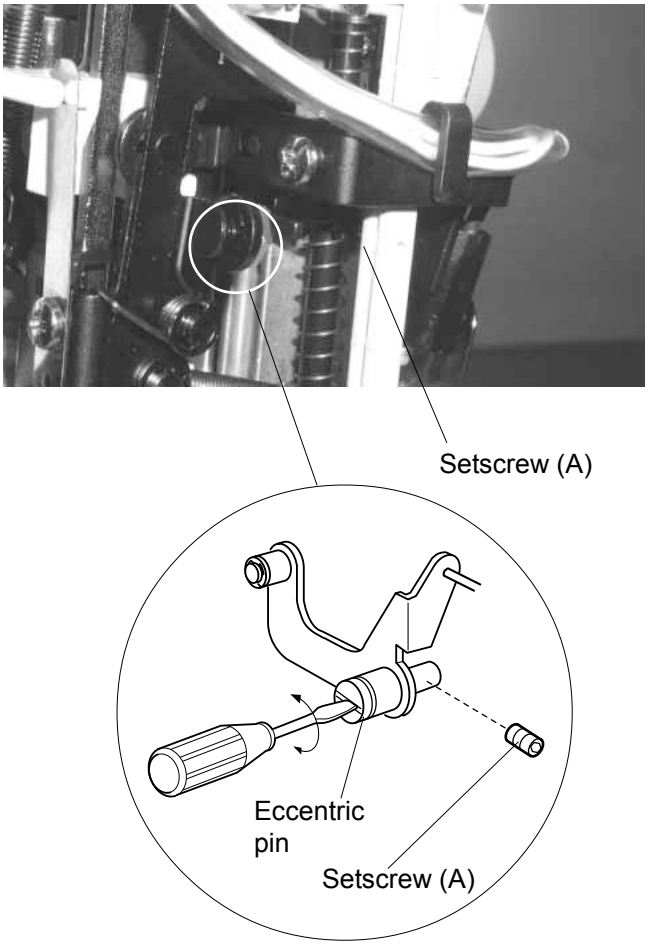

TO ADJUST TENSION RELEASE MECHANISM (2)

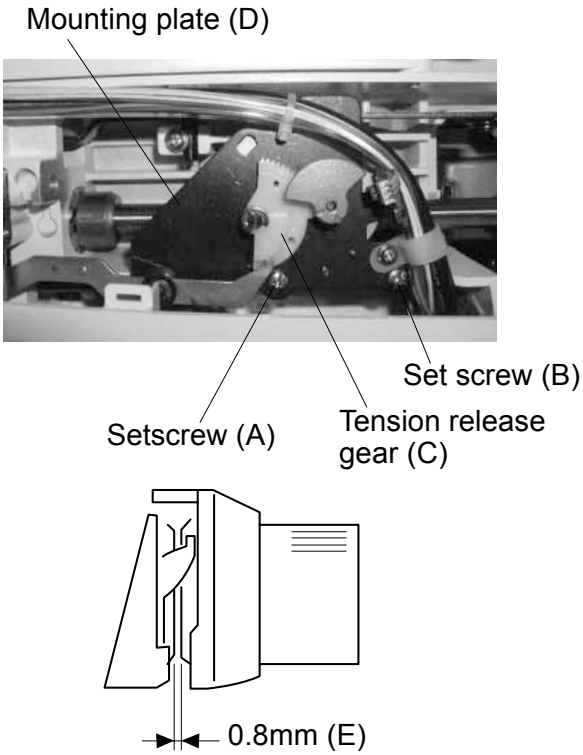

The tension release motor should open the tension discs 0.8mm. If not, adjust it as follows:

1. Remove the face plate, top cover and thread guide (refer to pages 1 and 5).
2. Set the tension dial at “9”.
3. Turn the tension release gear (C) counter-clockwise until it stops.
4. Check the opening. It should be 0.8mm (E).
   If the opening is not wide enough, loosen the setscrews (A) and (B).
   Tighten the setscrew (B) slightly.
   Move the mounting plate (D) toward you to increase the opening.
   Tighten the setscrews (A) and (B).
5. Attach the thread guide, top cover and face plate.

* Note
When the tension release gear is turned clockwise until it stops, the tension release plate (F) should have a play.

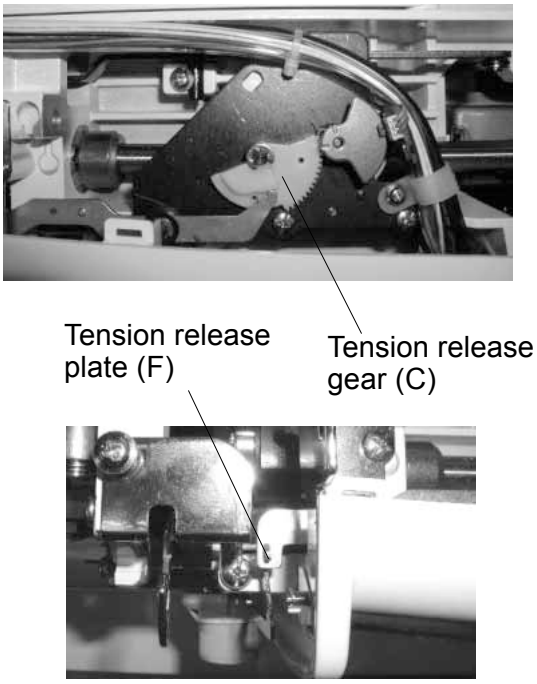

TO ADJUST UPPER THREAD TENSION

The upper thread tension should be 65 - 80 grams when pulling the thread (white polyester thread size 50) at the speed of 110mm/sec with the tension dial at “4” (Make sure the foot is lowered.)

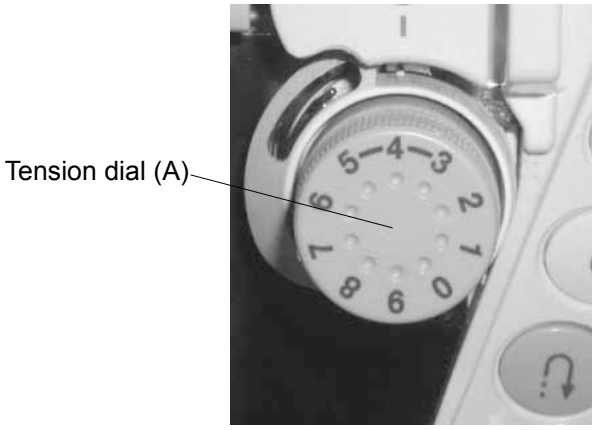

1. Set the thread tension dial (A) to “4”.
2. Pull out the tension dial (A).
3. Lower the presser foot.
4. Adjust the tension by turning the dial (B).
   To loosen the tension, turn it counter-clockwise.
   To tighten the tension, turn it clockwise.
5. Push in the tension dial (A) aligning the “4” with the setting mark (C).

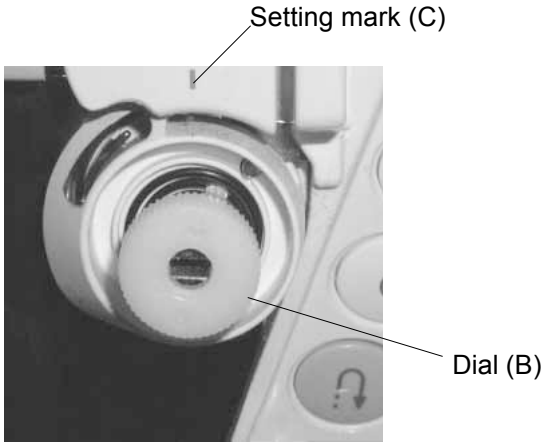

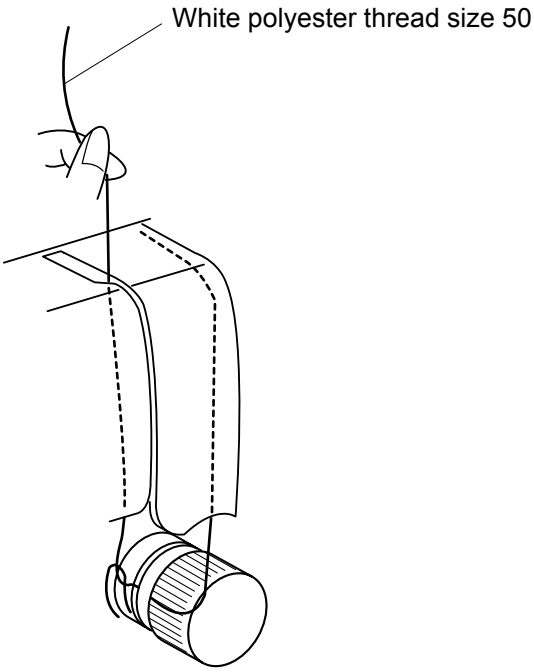

TO ADJUST BOBBIN WINDER

The amount of wound bobbin thread should be 16.5 – 19.5 (C) in diameter.

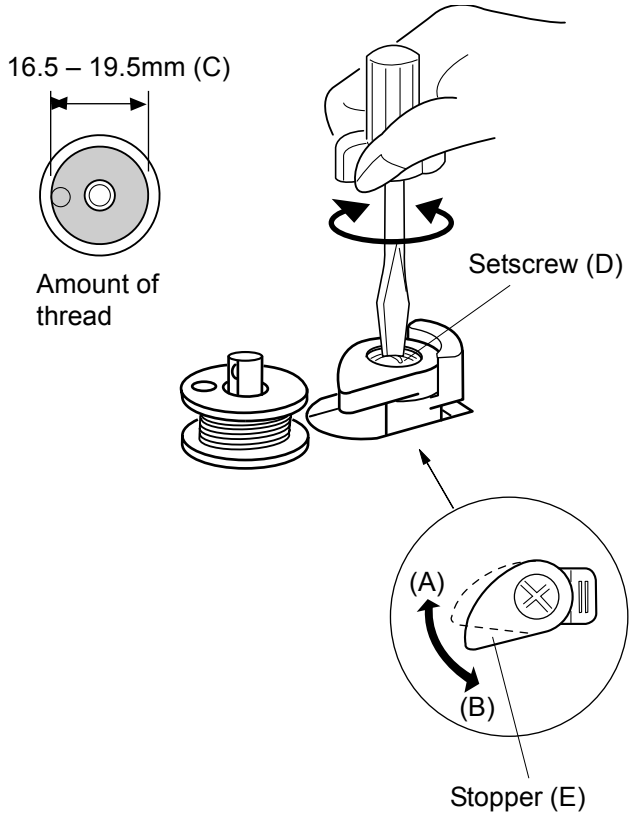

1. Loosen the setscrew (D), and turn the stopper (E) in the direction of:

   A, if the amount of thread is not enough.
   B, if the amount of thread is too much.

2. Tighten the setscrew (D).

TO REPLACE NEEDLE THREADER PLATE

(Fig. I)

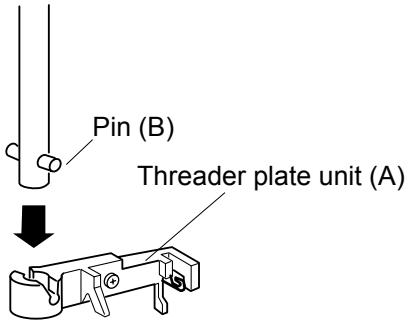

[To remove]:

1. Remove the foot holder.
2. Pull out the threader plate unit (A).

[To attach]:

3. Push the threader plate unit (A) up to snap it with the pin (B) as shown in Fig. I.
4. Attach the foot holder.

To adjust the position of the threader plate (C)

If the threader plate is slightly out of alignment, loosen the setscrew (D) and adjust the position as shown in Fig. II..

(Fig. II)

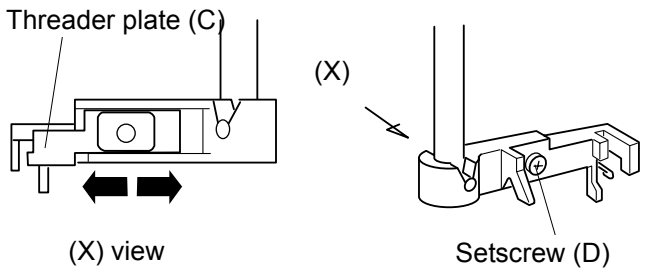

If the above way of adjustment is not applicable, make the adjustment as shown in Fig. III as follows:

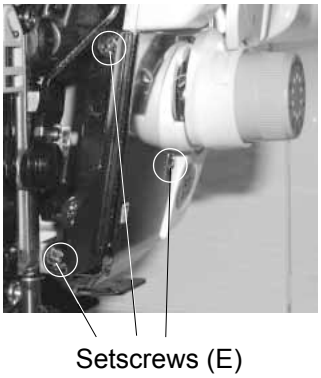

1. Open the face plate.
   Remove the 3 setscrews (E).
   Remove the arm thread guide and face plate guide.
2. When the threader plate is:
   - too high, loosen the hexagonal socket screw (F) and lower the positioning plate (G).
   - too low, loosen the hexagonal socket screw (F) and raise the positioning plate (G).
3. Tighten the setscrew (F).

(Fig. III)

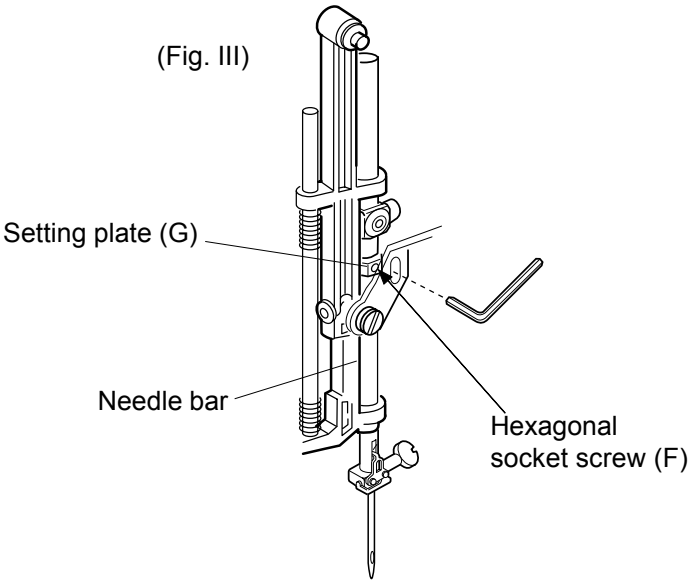

Replacement of the Thread Cutter Unit (new type)

The thread cutter mechanism was modified to improve the performance.
If the thread cutter does not function well, replace the thread cutter unit. When replacing old type of the thread cutter with new one, replace also the arm (1) with new type.

Note: The part number of the arm (1) has been changed from 846153007 to 846233000.

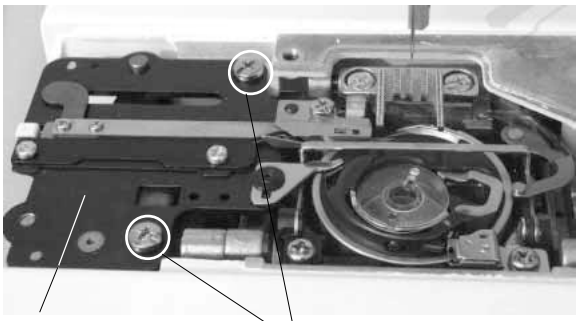

1. Remove the needle plate. Remove the two set screws (A) and the thread cutter unit.

2. Remove the snap ring E-3 (B) to release the link.

3. Remove the snap ring E-4 (C) and slide the link to disengage it from the actuator arm (1).
   Rotate the arm to the position shown in the dotted line and remove it.

4. Place the revised arm (1) on the pin, along with the spring. Insert the snap ring E-4 (C) between the arm (1) and the bottom end of the spring.

5. Slide the link back to engage it with the arm (1). Insert the snap ring E-3 (B).

6. Place the revised thread cutter unit and secure it with the setscrews (A). Attach the needle plate.

Note:
After replacement, check the position of the thread cutter switch and thread cutter sliding plate. (Refer to page s 37 and 26.)

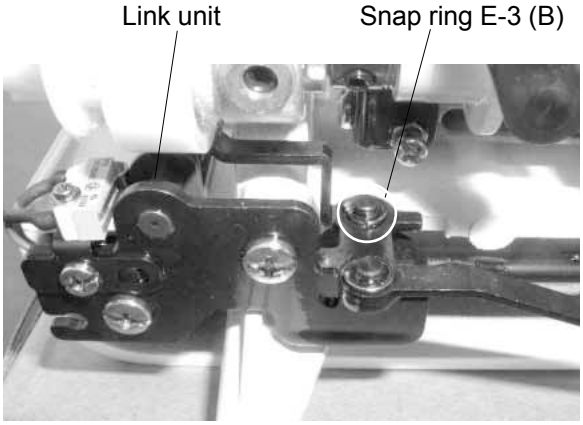

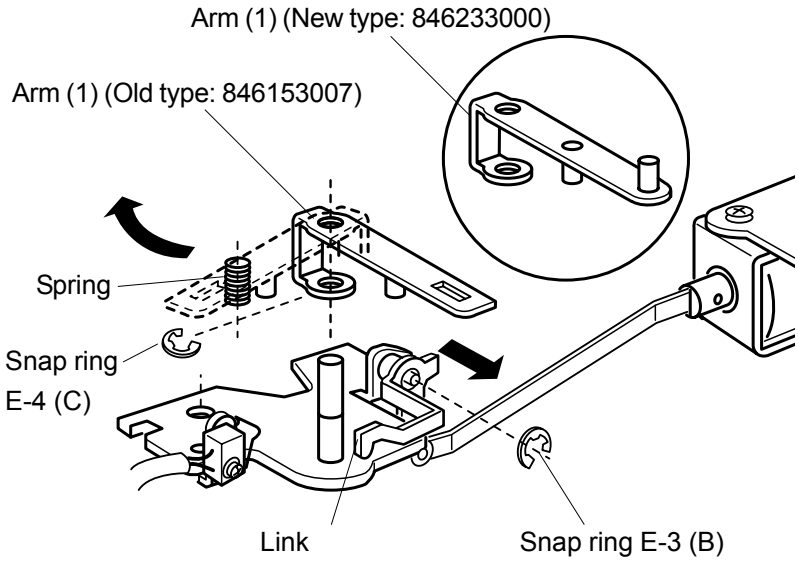

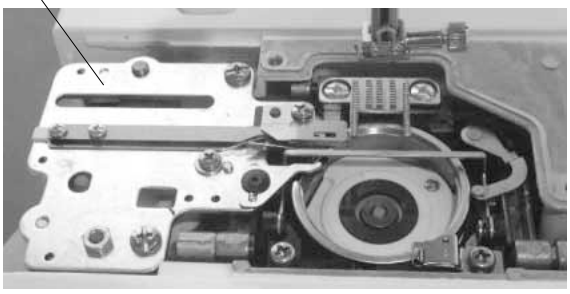

TO REPLACE AUTO THREAD CUTTER
(Old type)

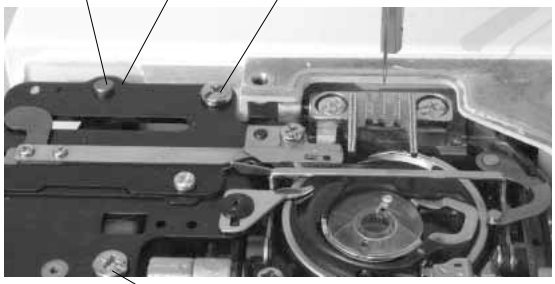

[To remove]:

1. Remove the needle plate, machine base and auto thread cutter cover (refer to pages 2 and 3).
2. Remove the 2 setscrews (A) and remove the auto thread cutter.

[To attach]:

3. Loosen the setscrew (D).
   Insert the pin (B) into the hole of the auto thread cutter.
   Insert the pin (C) into the hole of the driving arm (1).
   Tighten the 2 setscrews (A), then tighten the setscrew (D).

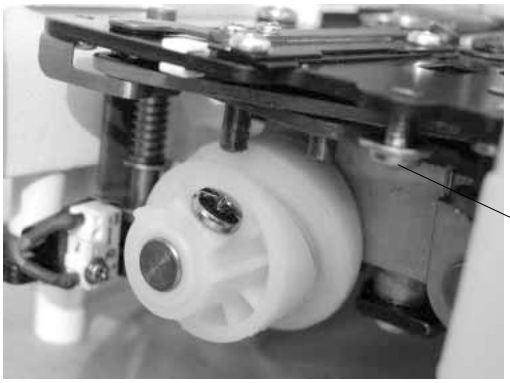

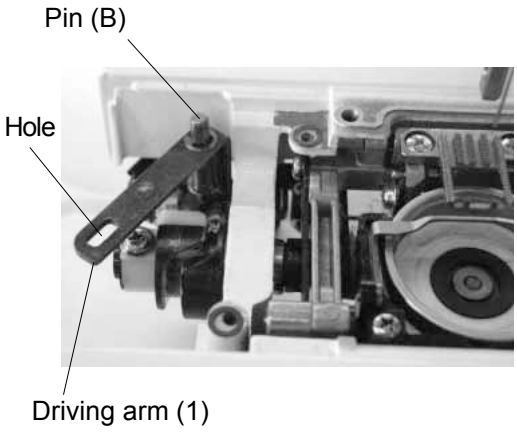

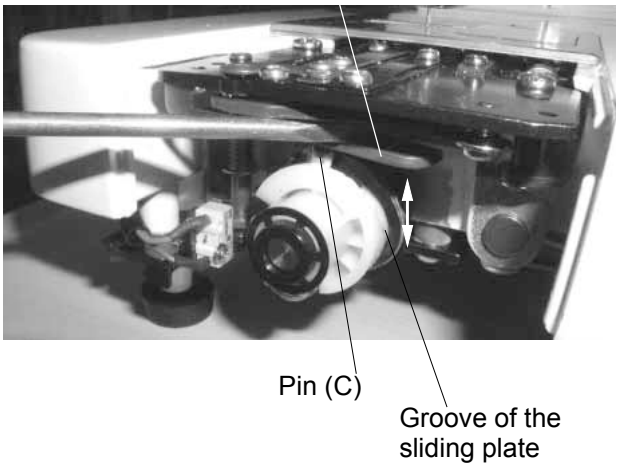

[To check the auto-thread cutter]

Set the needle bar at the lowest position.
Insert the pin (C) into the groove of the cutter driving cam by pushing down the driving arm (1).
Turn the hand wheel toward you to move the sliding plate back and forth.
When the sliding plate returns from the rightmost position, the driving arm (1) should be released and returns to the “UP” position.

* After installing the auto thread cutter, adjust the position of the sliding plate (refer to page 25).

TO ADJUST POSITION OF SLIDING PLATE

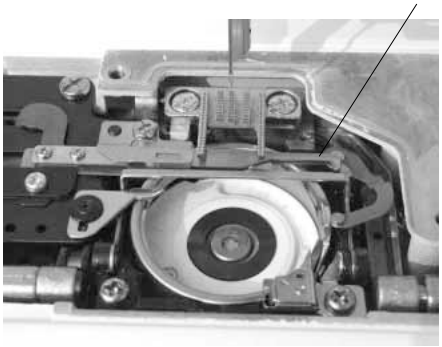

1. Set the needle bar at the lowest position.
   Insert the pin (B) into the groove of the cam (A) by pushing down the driving arm (1).
   In this state, turn the hand wheel to set the sliding plate (D) at the rightmost position.

2. Loosen the setscrew (C) and turn the cam (A) to set the the left end of the sliding plate (D) is in line with the right side of the second feed dog from the right.
   Tighten the setscrew (C).

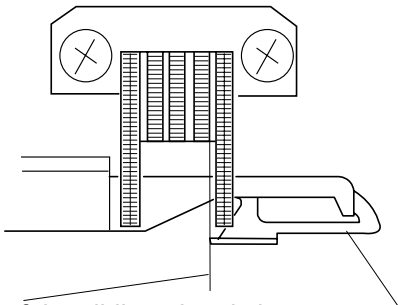

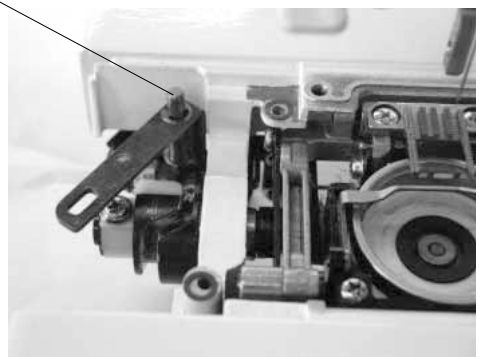

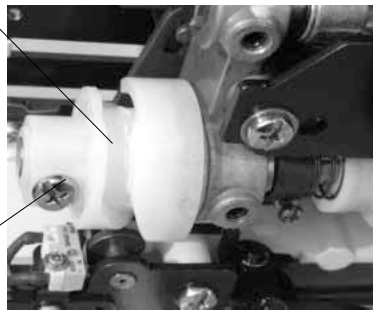

TO ADJUST THREAD SUPPLY CONTROL LEVER

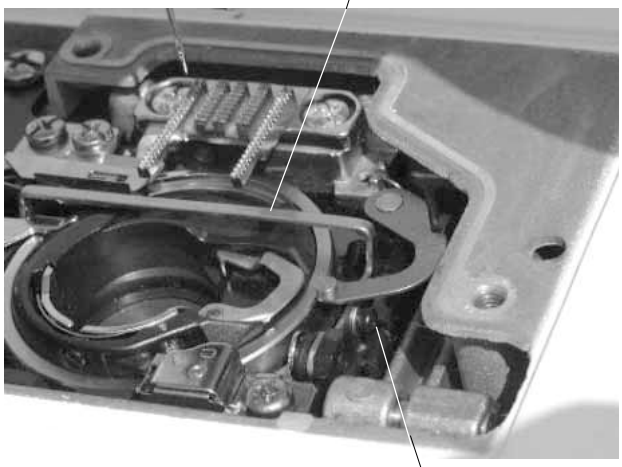

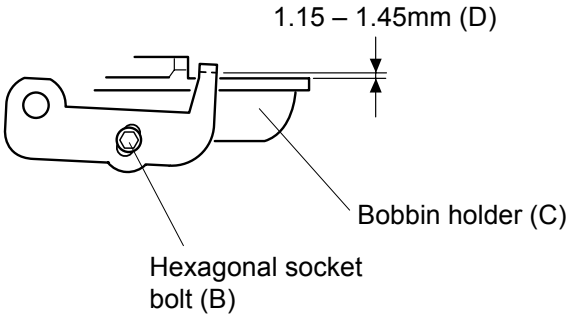

The distance from the bobbin holder to the thread supply control lever should be between 1.15 and 1.45mm.

1. Remove the needle plate.
2. Turn the hand wheel toward you until the thread supply control lever comes to its lowest position. Check the distance between the upper surface of the bobbin holder and the thread supply control lever.
   It should be between 1.15 and 1.45mm.
   If not, loosen the hexagonal socket bolt (B) and adjust the distance.
3. Tighten the hexagonal socket bolt (B).
4. Attach the needle plate.

SETTING POSITION OF THREAD TAKE UP LEVER

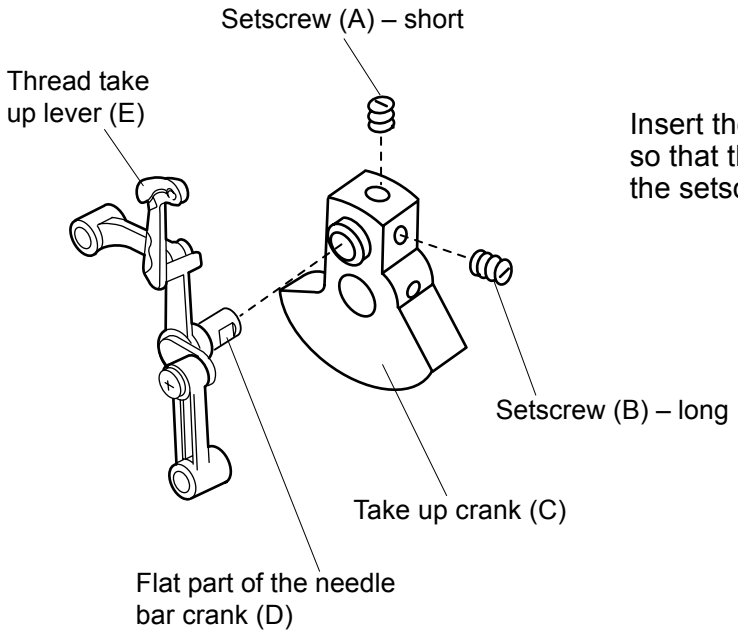

Insert the needle bar crank into the take up crank (C) so that the flat part of the needle bar crank (D) faces the setscrew (B). Then tighten the setscrew (B)

TO ADJUST UPPER SHAFT DECLUTCH DEVICE

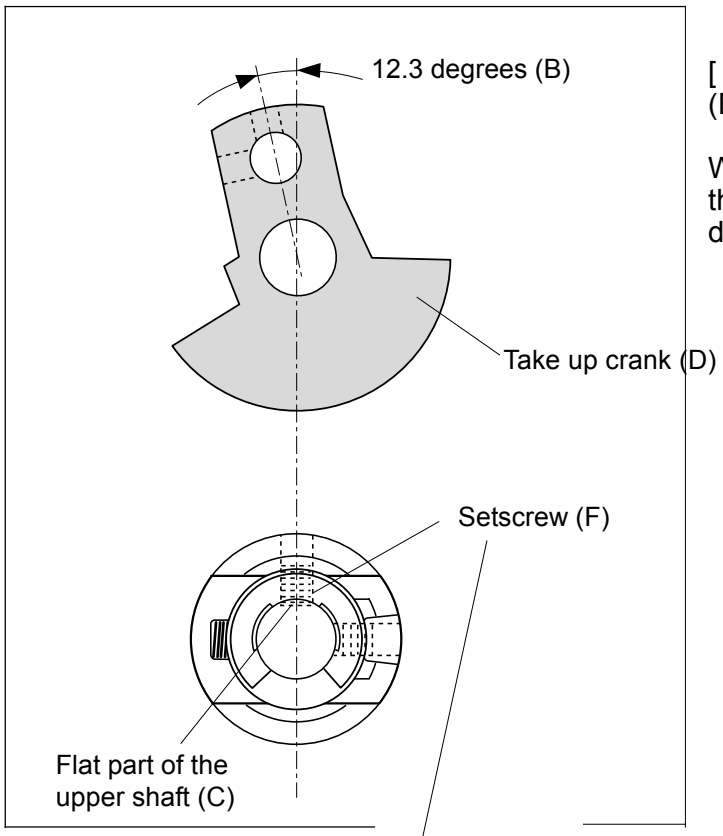

[Correct position of the upper shaft declutch device (E)]

When the flat part of the upper shaft (C) is leveled, the take up crank (D) should be at the angle of 12.3 degrees (B).

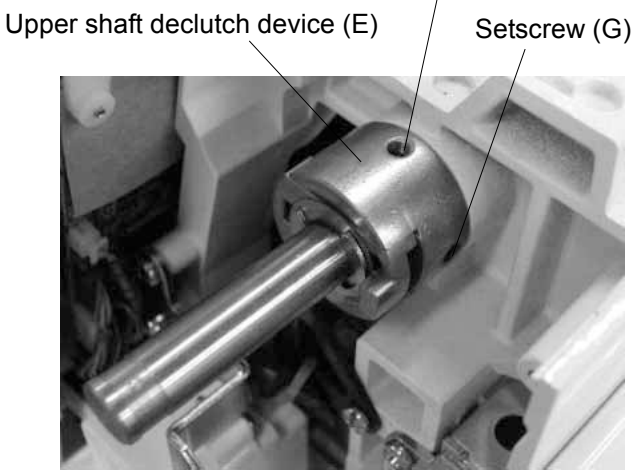

[Play on the declutch piece]

To reduce the play of the declutch piece, loosen the setscrews (F) and (G).
While pushing the upper shaft declutch device in the direction of (I), tighten the setscrew (F). Then tighten the setscrew (G). Make sure that the declutch piece (H) moves smoothly.

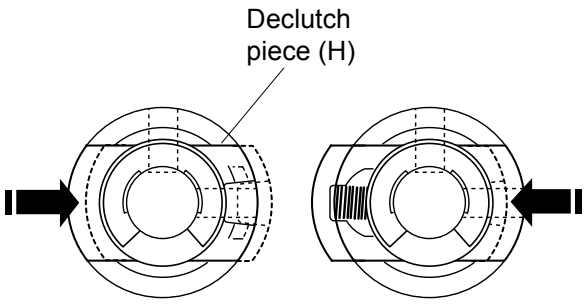

The declutch piece should move smoothly in both ways.

SETTING POSITIONS OF PARTS ON LOWER SHAFT

The setting positions of the parts on the lower shaft are as shown below.

The setting angle of the parts (A), (B) and (C) is the same as (D).

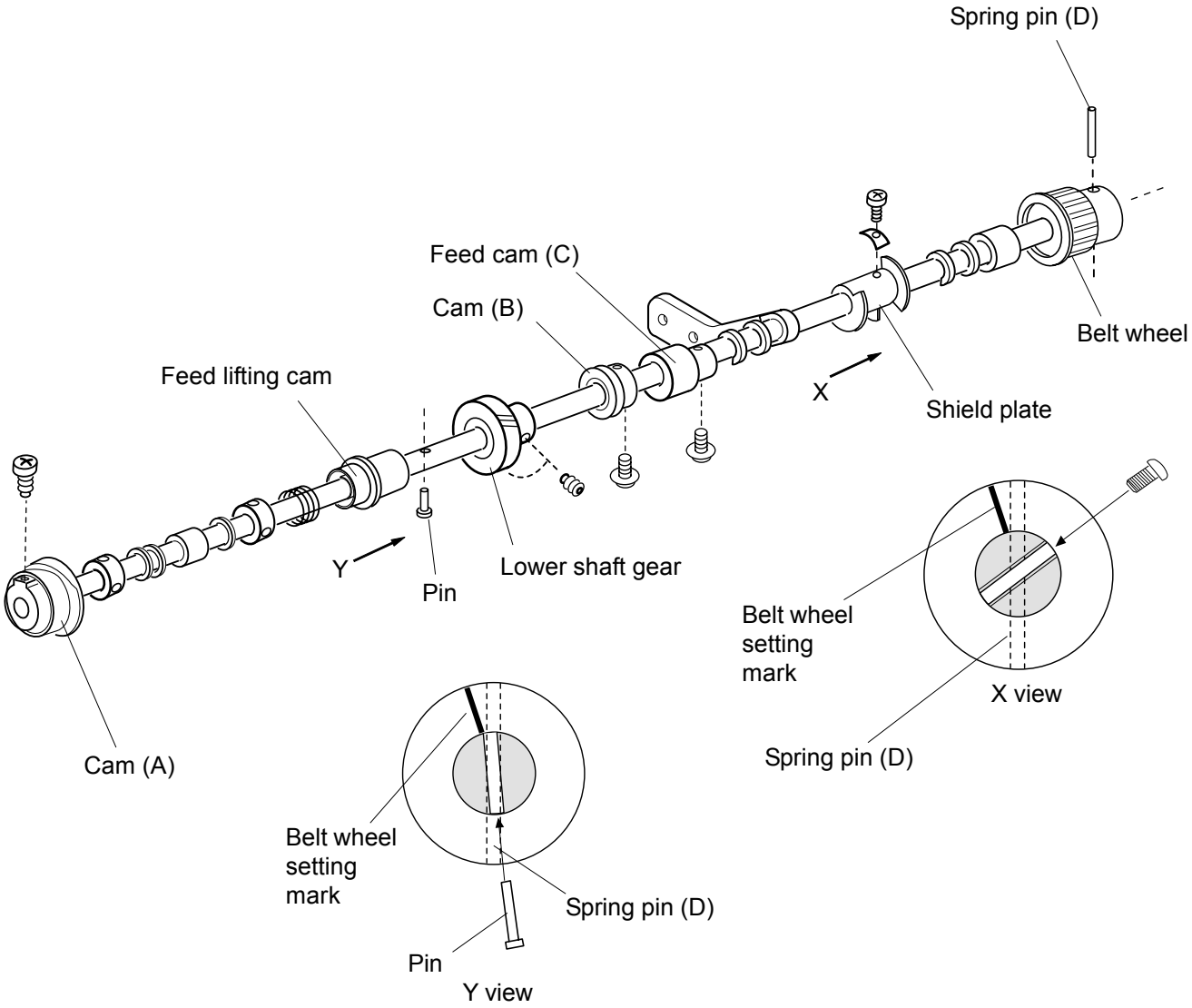

SETTING POSITIONS OF UPPER AND LOWER SHAFTS

When the setting mark (A) on the cam (B) is exactly at the top, the spring pin (E) is vertically straight and the setting mark (C) on the belt wheel (D) should be in the position as shown.

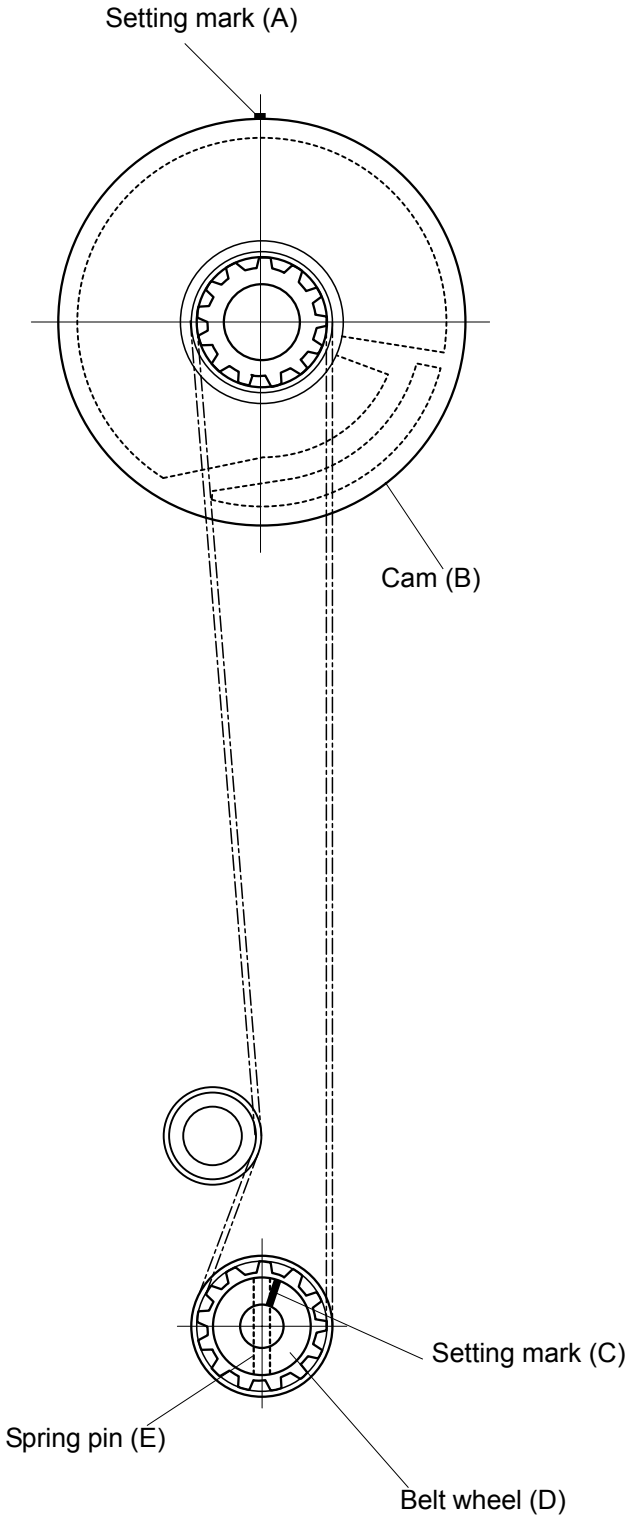

TO REPLACE DRIVING MOTOR

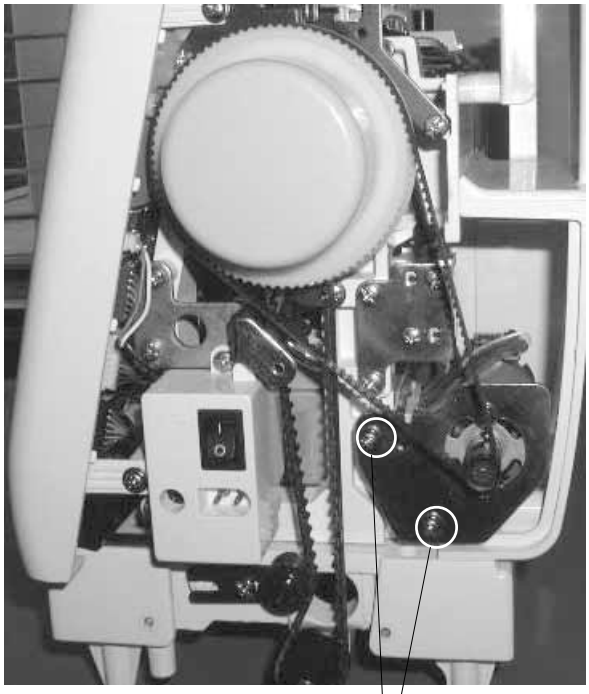

Setscrew (A)

[To remove]:

1. Remove the front cover (refer to page 4).
2. Remove the motor belt.
3. Pull out the connector from the circuit board A.
4. Remove the 2 setscrews (A) and pull out the driving motor.

[To attach]:

5. Tighten the 2 setscrews (A) slightly.
6. Adjust the belt tension and tighten the 2 setscrews (A) firmly.

[Correct motor belt tension]:

When the middle of the motor belt is pushed with a pressure of 200g (B), the deflection should be 5 mm (C).

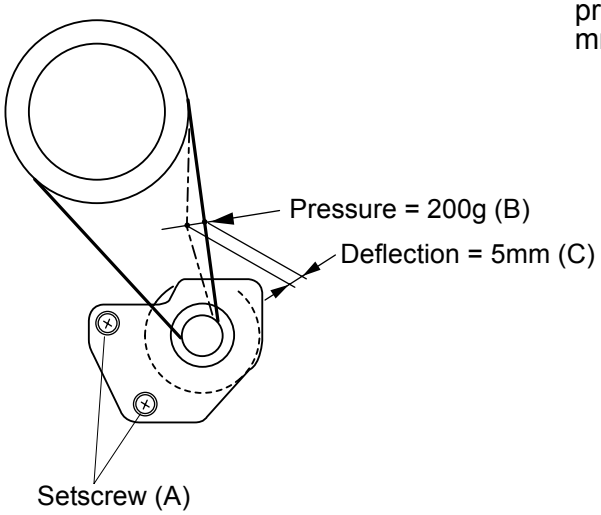

TO ADJUST ZIGZAG TIMING

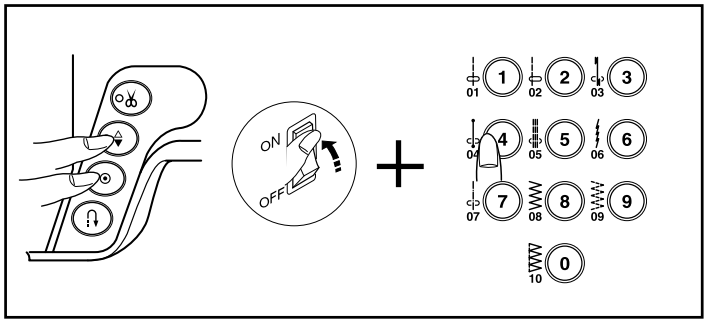

When the machine is set for zigzag stitching, the needle should start to zigzag 8.0 mm to 8.4 mm (C) = height of zigzag foot) above the surface of the needle plate.

1. Set the machine for adjusting mode by turning the power switch while pressing the needle up/ down and the lock stitch buttons at a time. Then press the number 4 button within 3 seconds (If it is not pressed within 3 seconds, the machine will return to default setting mode).
2. Turn the balance wheel toward you slowly with your hand until the needle comes 8.0-8.4mm above the surface of the needle plate in its upward travel. The “Bsen” should show “H”.
3. Remove the machine base.
   Loosen the setscrew (D) and turn the shield plate (E) until the “Bsen” on the LCD changes from [L[to [H] and buzzer sound.
   Tighten the setscrew (D).
4. Set the right side surface of the shield plate to the center of the sensor as shown in the Fig. 1 and tighten the setscrew (G)
5. Turn the balance wheel toward you, and check the clearance between the left side of the shield plates and sensors. (The shield plates and sensors should not tough.)
   Also, check that “Csen” changes from [L] to [H] at the lowest needle position.
6. Attach the machine base.

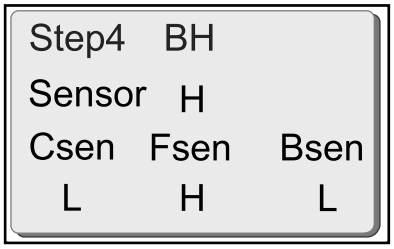

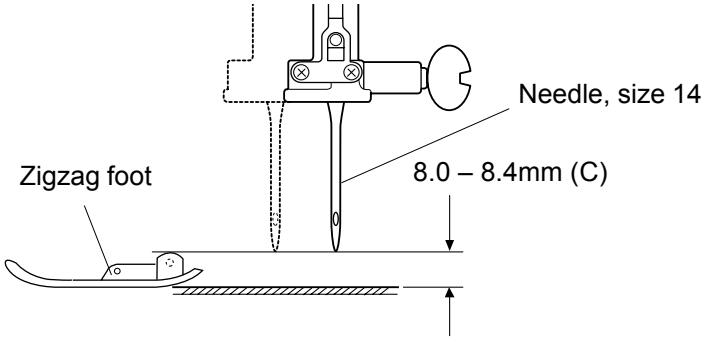

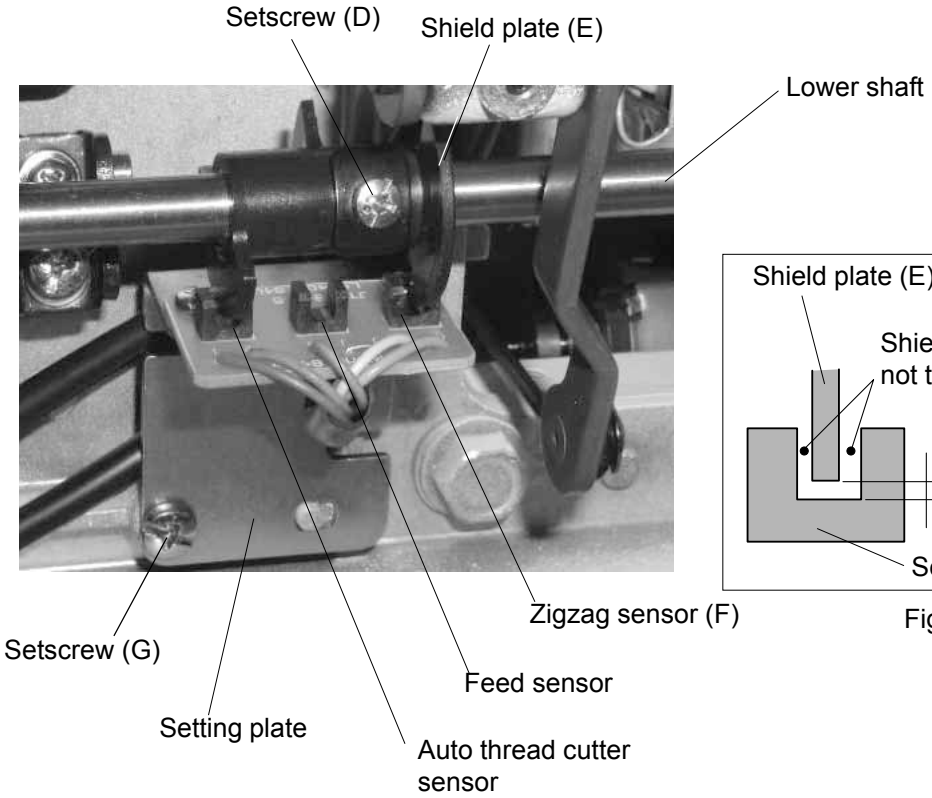

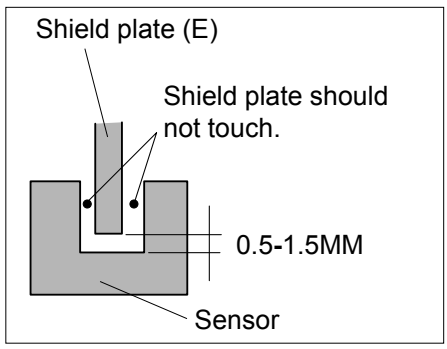

Fig. 1

TO ADJUST BUTTONHOLE LEVER POSITION

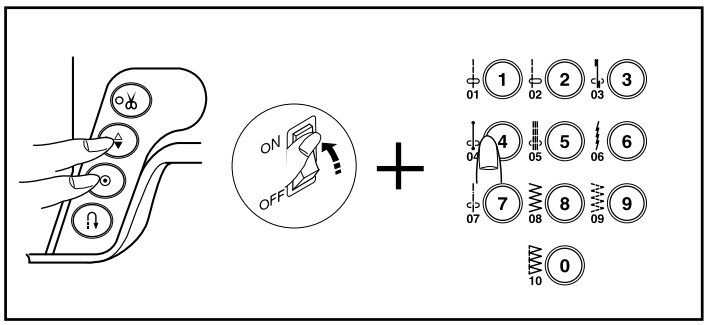

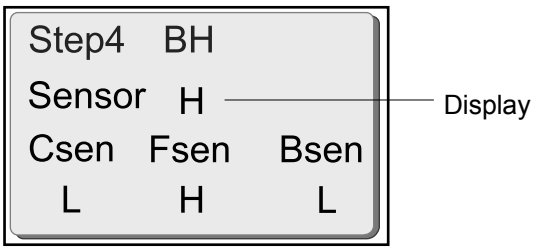

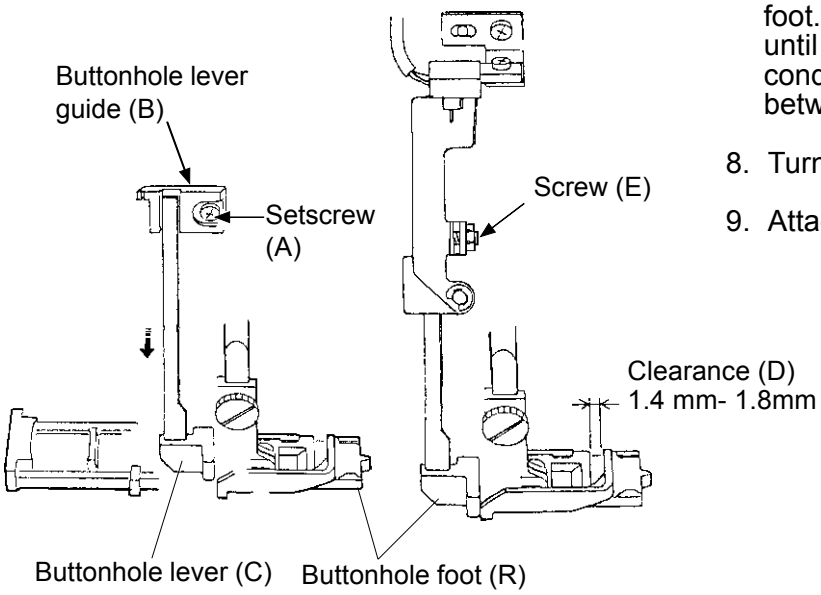

1. While pressing the needle up/down and lock stitch keys, turn the power switch on. Press the number “4” within 3 seconds.
2. Remove the face plate (refer to page 1). Lower the buttonhole lever (C).
3. Loosen the setscrew (A) and move the buttonhole lever guide (B) until the display shows “Sensor L”.
4. Attach the buttonhole foot (R).
5. Adjust the clearance of the buttonhole foot to 1.4 - 1.8mm (D).
6. Loosen the screw (E) until the display shows “Sensor H”.
7. Tighten the screw (E) until the display just changes from “Sensor H” to “Sensor L”. Place a sheet of paper under the buttonhole foot. Then ull the paper toward you slowly until the “Sensor” changes to “H”. In this condition, the clearance (D) should be between 1.4mm and 1.8mm.
8. Turn off the power switch.
9. Attach the face plate.

TO ADJUST STRETCH STITCH FEED BALANCE

When the number 8 is sewn 5 times with the stretch stitch balance dial (C) at the setting mark (D), the measurement should be between 32 and 38mm as shown in Fig. 1.

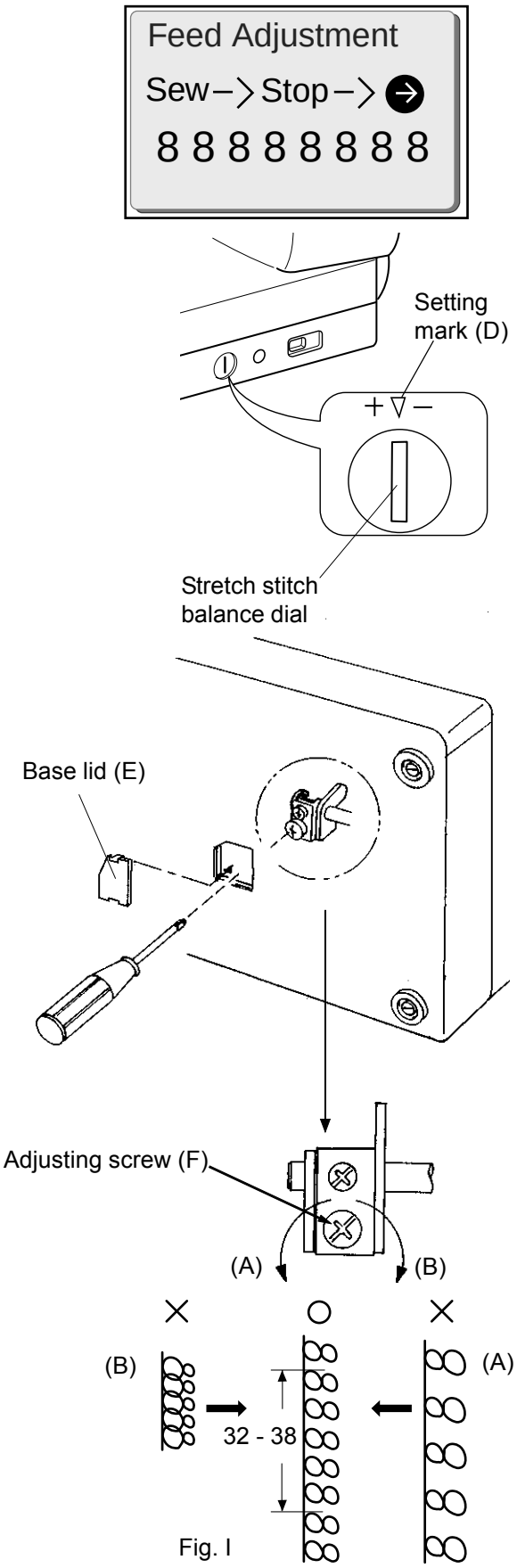

Fig. I

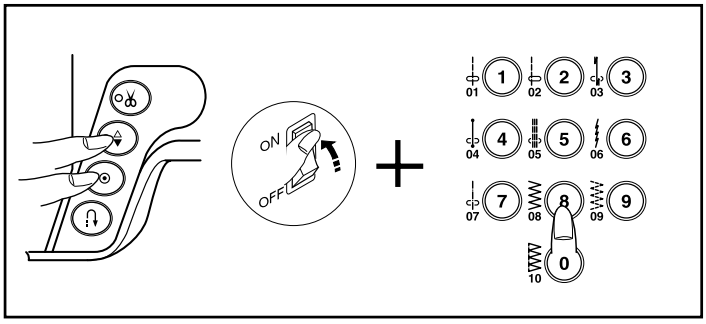

Fig. II

[To adjust]:

1. While pressing the needle up/down button and lock stitch button, turn the power switch on. Then press the number “8” within 3 seconds as shown in the Fig. II.
2. Set the stretch stitch balance dial (C) at the setting mark (D).
3. Sew 8 of number 8 and check if the measurement of five of them is between 32 and 38mm.
4. If not, remove the base lid (E), and turn the adjusting screw in the direction of:

   (A) if the measurement is more than 38mm.
   (B) If the measurement is less than 32mm.

   * When the “?” button is pressed, the adjusting screw (F) comes to the adjusting position. Turn the adjusting screw, then press “?” button and sew 8 of number 8.

5. Turn off the power switch.
6. Attach the base lid (E).

TO ADJUST PRESSER BAR LIFTER SWITCH POSITION

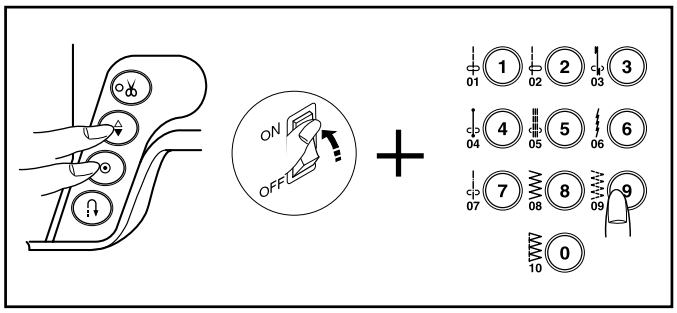

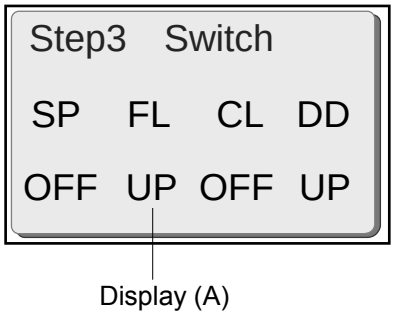

1. While pressing the needle up/down and lock stitch buttons, turn the power switch on. Press the number “9” in 3 seconds.
2. Remove the face plate and top cover plate (refer to page 1).
3. When the presser bar is lifted or lowered, the display (A) shows “UP” or “DOWN” respectively. If not, loosen the setscrew (B) and adjust the position of the switch set plate (C).

   * When the presser foot is 3mm above the surface of the needle plate, the display should change “UP” or “DOWN”.
4. Turn off the power switch.
5. Attach the top cover plate and face plate.

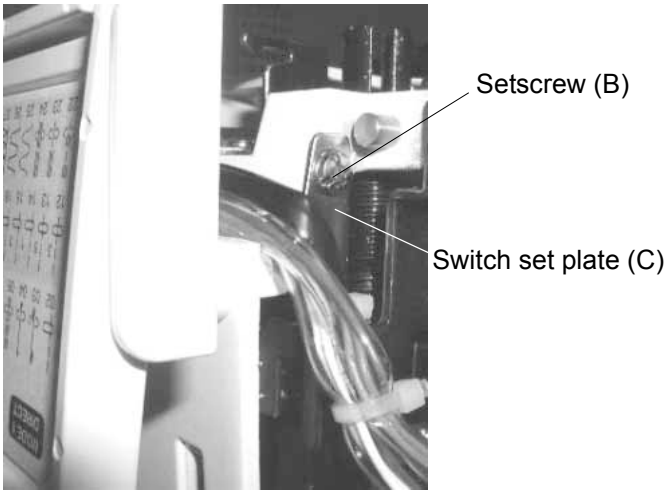

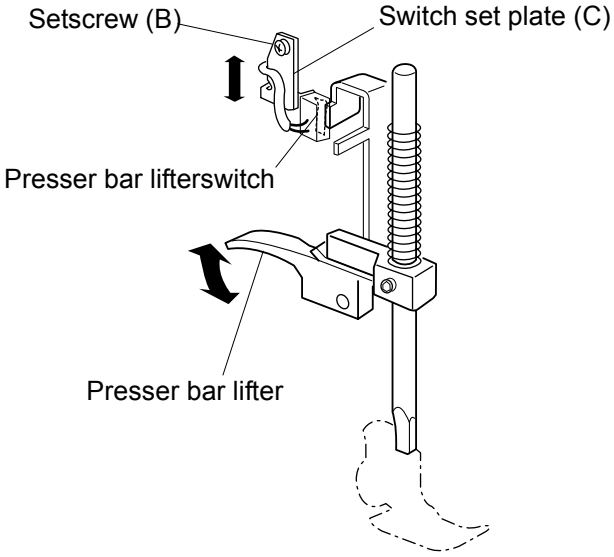

TO ADJUST AUTO THREAD CUTTER SWITCH POSITION

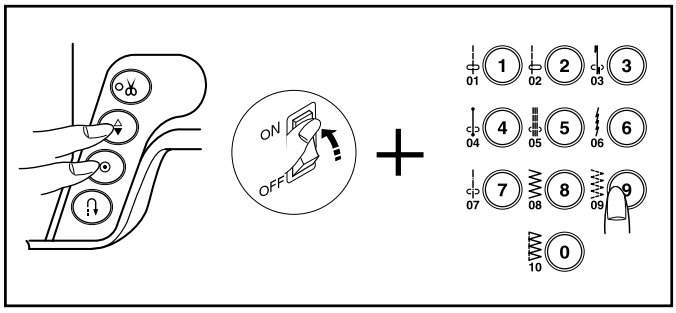

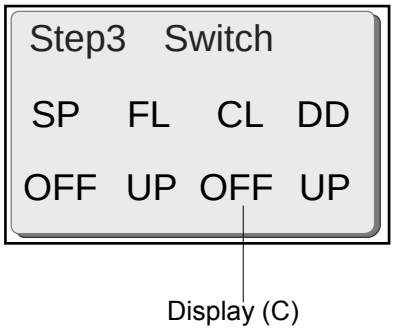

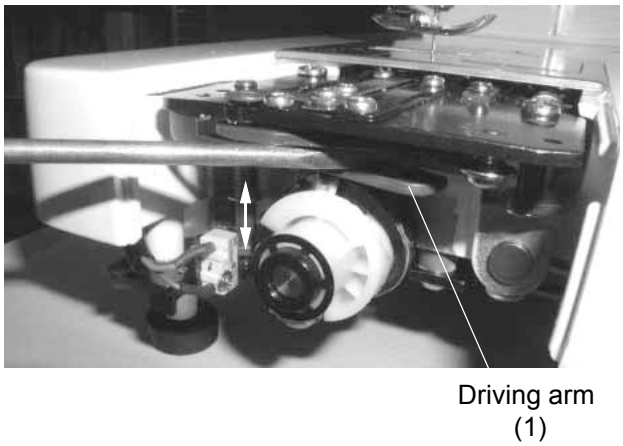

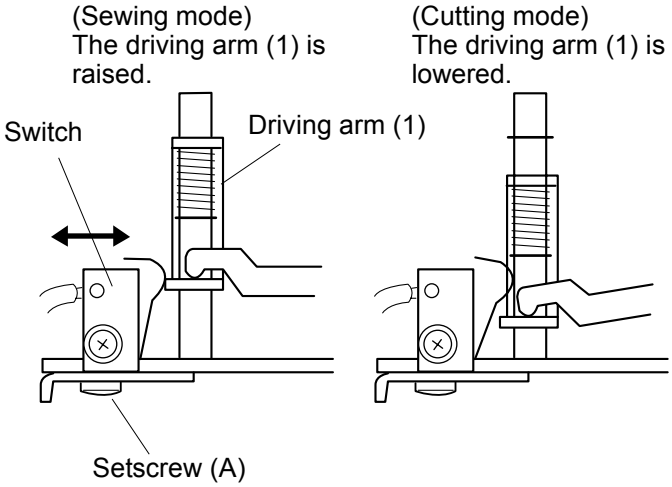

1. While pressing the needle up/down and lock stitch buttons, turn the power switch on. Press the number “9” within 3 seconds.
2. Remove the machine base and auto thread cutter cover (refer to pages 2 and 3).
3. Set the needle bar at the lowest position.
4. Loosen the setscrew (A) and adjust the position of the switch (B) as follows:
   * When the driving arm (1) is lowered, the display (C) shows “ON”.
   * When the driving arm (1) is raised, the display (C) shows “OFF”.
5. Attach the machine base and auto thread cutter cover.

TO ADJUST POSITION OF SOLENOID FOR UPPER SHAFT DECLUTCH DEVICE

The distance between the upper surface of the yoke (A) and the snap ring on the plunger (B) should be 5mm (C) when the upper shaft declutch device is activated.

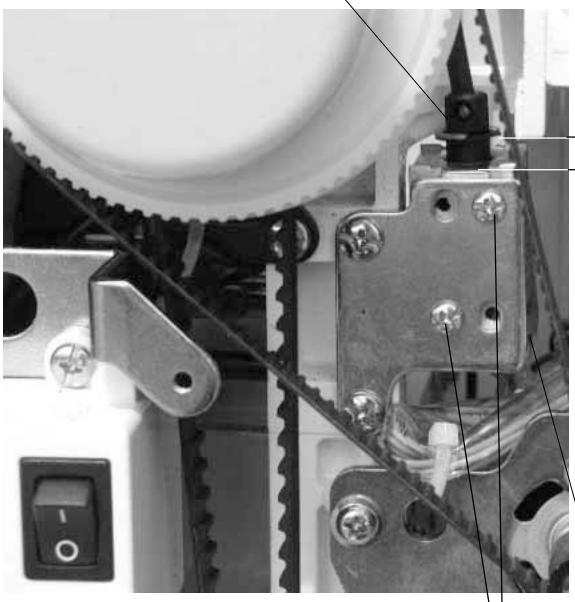

1. Remove the belt cover (refer to page 2).
2. Loosen the 2 set screws (D).
   Adjust the distance to 5mm.
3. Tighten the 2 set screws (D)
4. Attach the belt cover.

TO ADJUST POSITION OF SOLENOID FOR AUTO THREAD CUTTER

The distance between the yoke (A) and the snap ring on the plunger (B) should be 2.5mm.

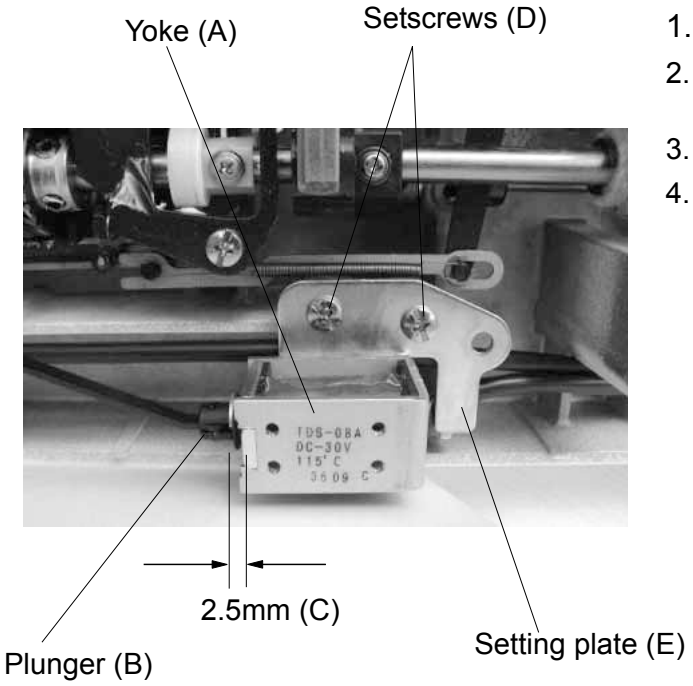

1. Remove the machine base (refer to page 2).
2. Loosen the 2 setscrews (D) and adjust the distance to 5mm (C) by moving the setting plate (E).
3. Tighten the 2 setscrews (D).
4. Attach the machine base.

TO ADJUST POSITION OF SOLENOID FOR BOBBIN IDLING PREVENSION LEVER

The distance between the yoke (A) and the snap ring on the plunger (B) should be 3mm (C).

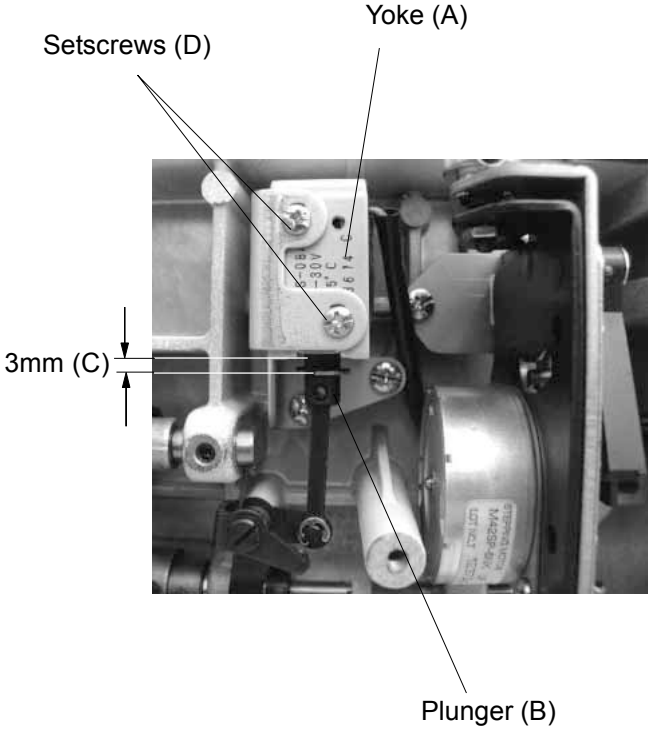

1. Remove the machine base (refer to page 2).
2. Loosen the 2 setscrews (D) and adjust the distance to 3mm (C) by moving the yoke (A).
3. Tighten the 2 setscrews (D).
4. Attach the machine base.

DIAGNOSIS CHART

Note:

1. This diagnosis device is provided for the purpose of checking the circuit boards A and K and the functions of the MC6500P.
2. The power switch must be turned off when replacing parts.
3. The language on the LCD is English only.

Preparation

1. Remove the machine base.
2. Remove the belt cover
3. Shift the bobbin winder knob to the right.
4. Slide the drop feed lever to the left to raise the feed dog.
5. Slide the speed adjusting lever to the left.
6. Remove the presser foot and raise the presser bar lifter.
7. Set the needle bar at the highest position.

Before using the diagnosis device,

Check or replace the following part(s) if nothing happens when the power switch is turned on:

1. the connectors are connected properly (refer to page 10).
2. replace the circuit board A or fuse on it (refer to page 8).
3. replace the power supply cord.
4. replace the machine socket.
5. replace the transformer.

When the sewing lamp does not turn on,

1. replace the sewing lamp.
2. replace the circuit board A.

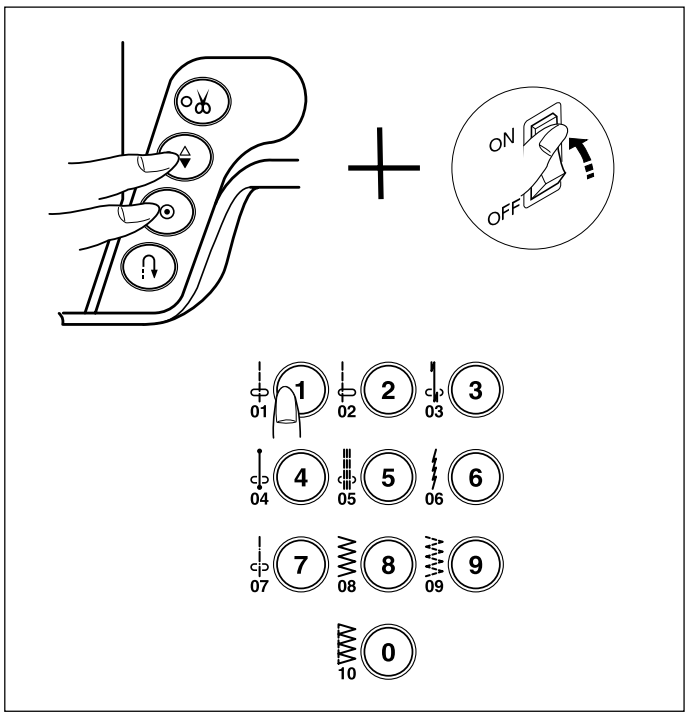

To activate the diagnosis device

1. While pressing the needle up/down and lock stitch buttons, turn the power switch on. Then press the number 1 button within 3 seconds.
2. The Step 1 screen appears.

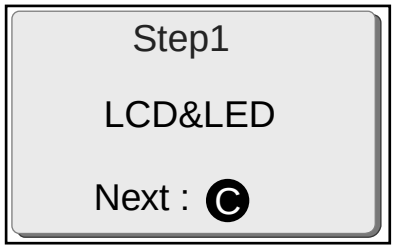

1. Step 1 (function of buzzer, LCD and LED)

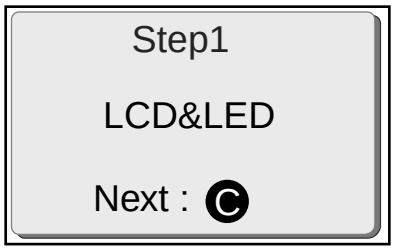

[Correct condition]

1) Buzzer sounds
2) LCD and LED blink at 1 second interval.
3) Sewing light turns on.

Press the “Clear” button to proceed to the next step.

[Faulty condition and remedy]

Buzzer does not sound.
The Step 1 screen does not appear.
LCD and LED do not blink

- Remedy-
a) Turn the LCD brightness adjusting dial clockwise or counter clockwise.
b) Replace circuit boards F, K or A.

2. Step 2 (Function of Buttons)

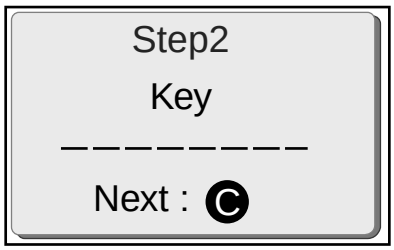

[Correct condition]

Press all of the buttons on the front cover. (Press the button “C” at last.)
Each time a button Is pressed, the name of the button appears on the LCD.

Press “Clear” button to proceed to the next step.

[Faulty condition and remedy]
The name of the button does not appear and LCD continues to indicate — — — — .

- Remedy-
Replace circuit boards F, K or A.

3. Step 3 (Detecting Switch)

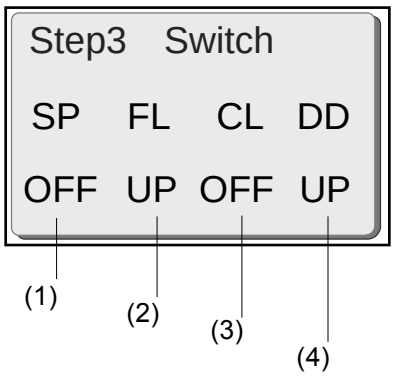

[Correct condition]

1) Bobbin winding switch (SP)
   Bobbin winder knob at left: ON
   Bobbin winder knob at right: OFF
2) Presser bar lifter switch (FL)
   Presser foot is up position: UP
   Presser foot is down position: DOWN
3) Auto thread cutter switch (CL)
   Driving arm at up position: OFF
   Driving arm at down position: ON

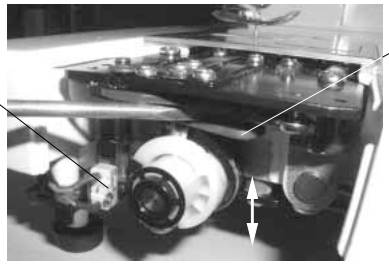

4) Drop feed switch (DD)
   Lever at the left: UP
   Lever at the right: DOWN

Press the “Clear” button to proceed to the next step.

[Faulty condition and remedy]
The display does not change or is reversed.

Adjust the position of the switches, or replace a switch or circuit board A.

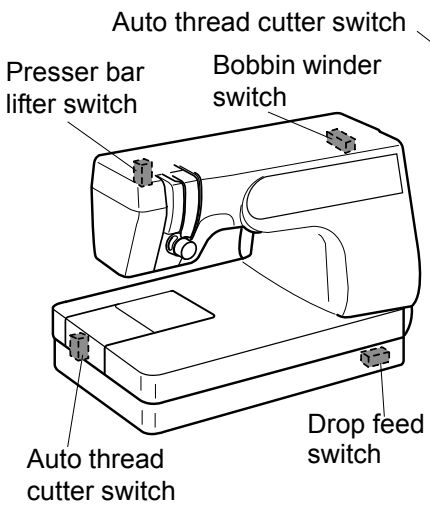

4. Step 4 (photo sensor)

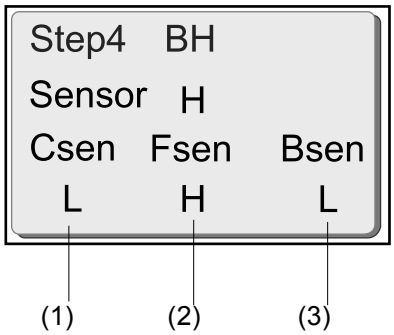

[Correct condition]
The display shows [H] or [L].

Pull the buttonhole lever toward you - [H]
Release the buttonhole lever - [L]
Push the buttonhole lever to the back - [H]

Turn the hand wheel and see if display changes to [H] or [L].

(1) Auto-thread cutter sensor
(2) Feed sensor
(3) Zigzag sensor

The “Csen” changes from “L” to “H” at the lowest needle position.

[Faulty condition and remedy]

The screen does not change.

- Remedy –
Adjust the position of the shield plate.
Adjust the position of the photo sensor.
Replace the photo sensor or circuit board A.

5. Step 5 (speed sensor)

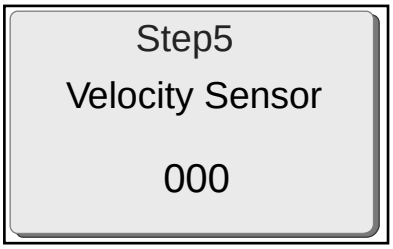

[Correct condition]

Turn the hand wheel against you slowly.
The display should show between 414 and 420.

Press the “Clear” button to proceed to the next step.

[Faulty condition and remedy]

The display does not change or shows 413 or less.

- Remedy –
Clean up the photo sensor.
Adjust the position of the photo sensor.
Replace the motor or circuit board A.

6. Step 6 (Speed control lever)

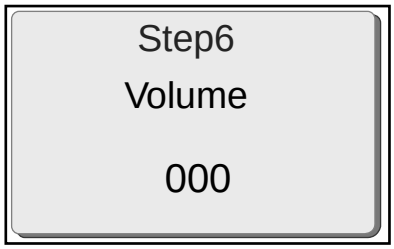

[Correct condition]

Move the speed control lever slowly.
The display shows:
At the left end: 000 - 002
At the right end: 253 – 255

[Faulty condition and remedy]
The display does not change or indicates incorrect value.

- Remedy –
Replace the speed control lever, circuit boards K or A.

7. Step 7 (Foot control)

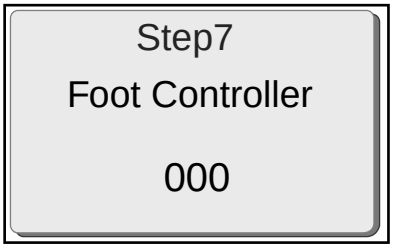

[Correct condition]

The display shows:
000 – 016 when released foot control.
208 – 250 when fully depressed.
251 – 255 when the foot control is disconnected.

Press “Clear” button to proceed to the next step.

[Faulty condition and remedy]

The display does not change or indicates incorrect value.

- Remedy –
Replace the foot control, machine socket or circuit board A.

8. Step 8
(Solenoid)

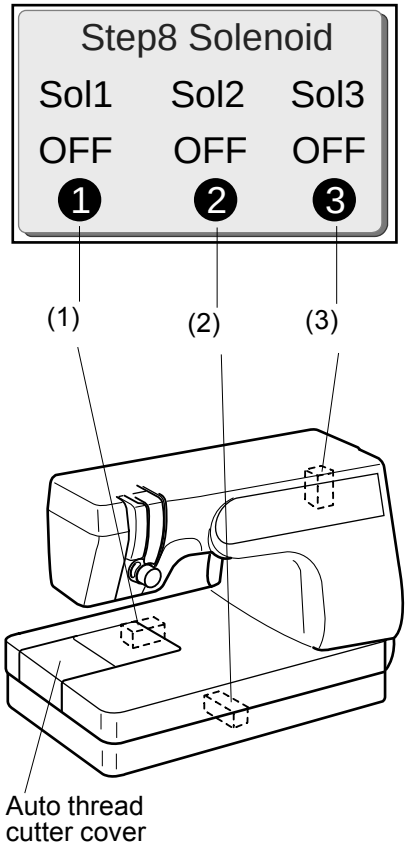

[Correct condition]

Press a number corresponding to the solenoids

1) For auto-thread cutter
Set the needle bar at the lowest position.

Press the button (1)
When the driving arm is at:
Up: OFF
Down: ON

2) For bobbin idling prevension lever
Remove the hook cover plate.

Press the button (2)
When the lever is at the:
right: OFF
left: ON

3) For upper shaft
Set the needle bar at the highest position.

When the activating rod is at the position of:

Up: OFF
Down: ON

Press the “Clear” button to proceed to the next step.

[Faulty condition and remedy]

The driving mechanism does not function.

- Remedy –
Check if the connecting parts moves properly.
Replace a solenoid or the circuit board A.

9. Step 9 (Stepping Motors)

(1)

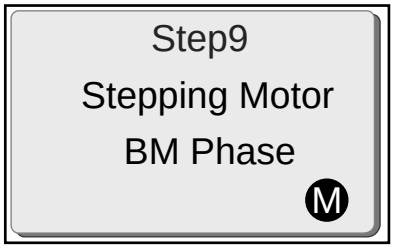

(2)

(3)

[Correct condition]

1) When the memory button (M) is pressed with the needle bar at “UP” position, the needle bar vibrates and the the needle drop is set at “M” position. (zigzag stepping motor)

2) When the memory button (M) is pressed with the needle bar at “Middle” position, the tension disc is closed. (tension stepping motor)

3) When the memory button (M) is pressed with the needle bar at “DOWN” position, the feed dog vibrates and the feed dog is in the middle of its travel. (feed stepping motor)

Press the “Clear” button to proceed to the next step.

[Faulty condition and remedy]

The display shows “BM error”.

- Remedy –
Check the stepping motors if they rotate smoothly.
Replace the stepping motor.
Replace the circuit board A.

10. Step 10 (Driving and Bobbin Winding Motors)

Step10 Sewing Motor Spool Motor	[Correct condition] When the presser bar is lowered and the foot control is depressed, the driving motor runs. When the bobbin winding button is pressed, the bobbin winding motor runs.	[Faulty condition and remedy] The display shows “error”. - Remedy – Check the motor belt tension. Replace the driving motor, bobbin winding motor or circuit board A.