PARTS CATALOGUE FOR

PROFESSIONAL EMBROIDERY MACHINE

PR600Ⅱ
PR600ⅡC

11. 2005.

CONTENTS

(1) PRINCIPAL PARTS 2

(2) UPPER SHAFT MECHANISM 4

(3) NEEDLE BAR MECHANISM 6

(4) NEEDLE BAR CHANGE MECHANISM 8

(5) THREAD GUIDE MECHANISM 10

(6) ELECTRONIC PARTS 12

(7) MOTOR UNIT 16

(8) FEED MECHANISM 18

(9) LOWER SHAFT MECHANISM 24

(10) THREAD CUTTING MECHANISM 26

(11) THREAD WIPER MECHANISM 28

(12) UPPER THREAD GUIDE MECHANISM 30

(13) ATTACHMENTS 34

(14) PACKING MATERIALS / PRINTED MATTER 36

(15) ACCESSORY PARTS 38

(1) PRINCIPAL PARTS

No.	CODE	NAME	REMARKS
1	018083536	BOLT, SOCKET M8X35	
2	025080236	WASHER, PLAIN M 8	
3	XC5585051	BED COVER TOP	
4	XC5589052	ARM COVER R	
5	XC5590051	ARM COVER R LID	
6	XC5591052	ARM COVER L	
7	XC5592051	CARRIAGE COVER	
8	XC5593051	MOTOR COVER	
9	XC5594051	SCREW COVER	
10	087411416	TAPTITE, CUP B M4X14	
11	0A5401006	SCREW, PAN (S/P WASHE) M4X10	
12	XC5581051	BASE COVER R	
13	XC6069051	GROOVE COVER A	
14	XC6070051	GROOVE COVER B	
15	XC5583051	BASE COVER L	
16	XC5582051	BASE COVER R LID	
17	XC6071051	GROOVE COVER C	
18	XC5584051	BASE COVER L LID	
19	XC5587051	BED COVER BOTTOM	
20	XC5588051	HINGED DOOR	
21	X53638151	SPRING	
22	XC6066051	BED COVER LID	
23	X59629051	TAPTITE,BIND B M3X10	
24	XC6552051	OILING CAUTION LABEL	

(1) PRINCIPAL PARTS

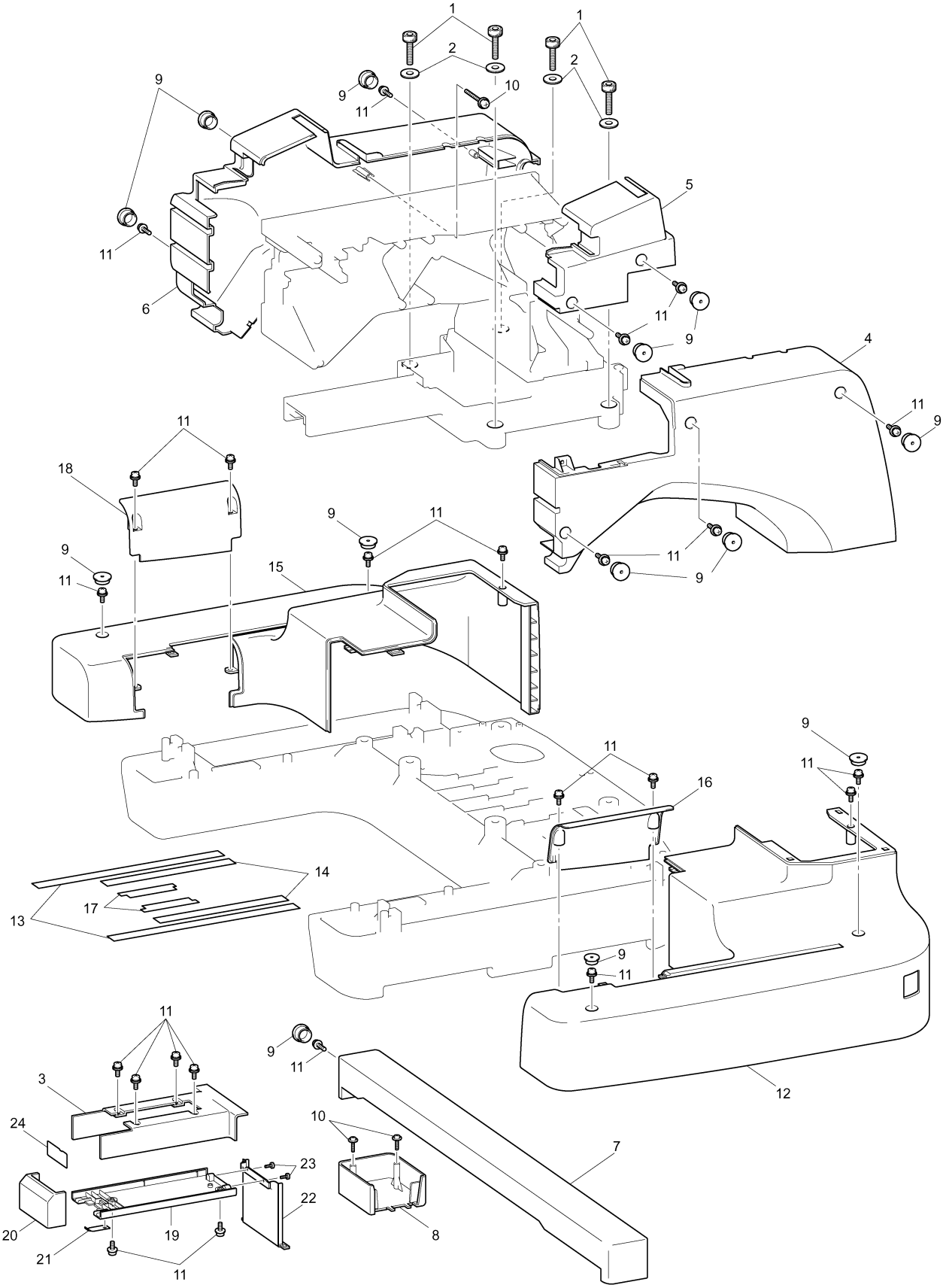

(2) UPPER SHAFT MECHANISM

No.	CODE	NAME	REMARKS
1	XC5595351	UPPER SHAFT ASSEMBLY	
2	XC5597151	PULLEY	
3	XC6362051	METAL PRESSER	
4	X57908051	TAPTITE,BIND S M4X10	
5	XC5623051	BASE NEEDLE BAR	
6	014500632	SET SCREW, SOCKET (CP) M5X6	
7	XC5624251	DRIVING SHAFT ASSY, P-FOOT	
8	XC5632251	P-FOOT LEVER SHAFT	
9	XC5633151	CONNECTING ROD, P-FOOT	
10	014400432	SET SCREW, SOCKET (CP) M4X4	
11	X50546050	WASHER,THRUST	
12	132421051	BUSHING PRESSER	
13	060501216	SCREW, BIND M5X12	
14	0A5401005	SCREW, PAN (S/P WASHE) M4X10	
15	138172051	SCREW,PAN(S/P WASHER)M4X10	
16	XC6784051	TENSION PULLEY ASSY	
17	XC3183051	FELT	
18	XD0767051	LED PCB PLATE	
19	XZ0207051	LINK FELT,3.3M	
20	XC6136051	ASSY:MAIN SHAFT SENSOR	
21	XC5666051	SENSOR HOLDER	
22	052300606	SCREW, PAN (S/P WASHER) M3X6	
23	XC7135051	CRANK ROD SET	
24	XC5616051	J SPRING COLLAR	
25	XC5617051	J SPRING	
26	XC5614051	J BRACKET	
27	062300416	SCREW, PAN M3X4	
28	XC5622051	J CUSHION BASE	
29	062260316	SCREW, PAN M2.6X3	
30	XC5621051	J VERTICAL BUSH	
31	008260304	SCREW, TRUSS M2.6X3	
32	131976050	WASHER,THRUST	
33	XC5618001	JUMP BRACKET	
34	XC5635151	P-FOOT VERTICAL BASE	
35	XC5636151	P-FOOT VERTICAL PIN	
36	014400432	SET SCREW, SOCKET (CP) M4X4	
37	XC5638051	PRESSER FOOT CUSHION BASE	
38	060300516	SCREW, BIND M3X5	
39	XC5637051	P-FOOT VERTICAL BUSH	
40	008260304	SCREW, TRUSS M2.6X3	
41	XC5648051	J BASE ASSY	
42	XC5651051	J DRIVING LEVER ASSY	
43	X53027050	WASHER	
44	XC5656051	J DIFFERENTIAL LEVER	

No.	CODE	NAME	REMARKS
45	014300432	SET SCREW, SOCKET (CP) M3X4	
46	XC5657051	J LINK ASSY	
47	048040346	RETAINING RING, E4	
48	XC5661051	J SLIDE LEVER	
49	XC5662051	J SLIDE LEVER SHAFT	
50	XC5663051	J CUSHION	
51	XC5664051	J CUSHION PIN	
52	012300432	SET SCREW, SOCKET (FT) M3X4	
53	XC5665051	J LEVER SPRING	
54	XC5639051	DRIVING LEVER ASSY, T/TAKE-UP	
55	XC5627051	ROLLER SHAFT ASSY	
56	028050246	WASHER, SPRING 2-5	
57	021500103	NUT, 1 M5	
58	XC5645051	DIFFERENTIAL LEVER, T/TAKE-UP	
59	107550002	ROLLER	
60	S32575001	THREAD TAKE-UP ROLLER PIN	
61	148782001	SPACER	
62	018501232	BOLT, SOCKET M5X12	
63	XC5646051	BEARING, T/TAKE-UP	

(2) UPPER SHAFT MECHANISM

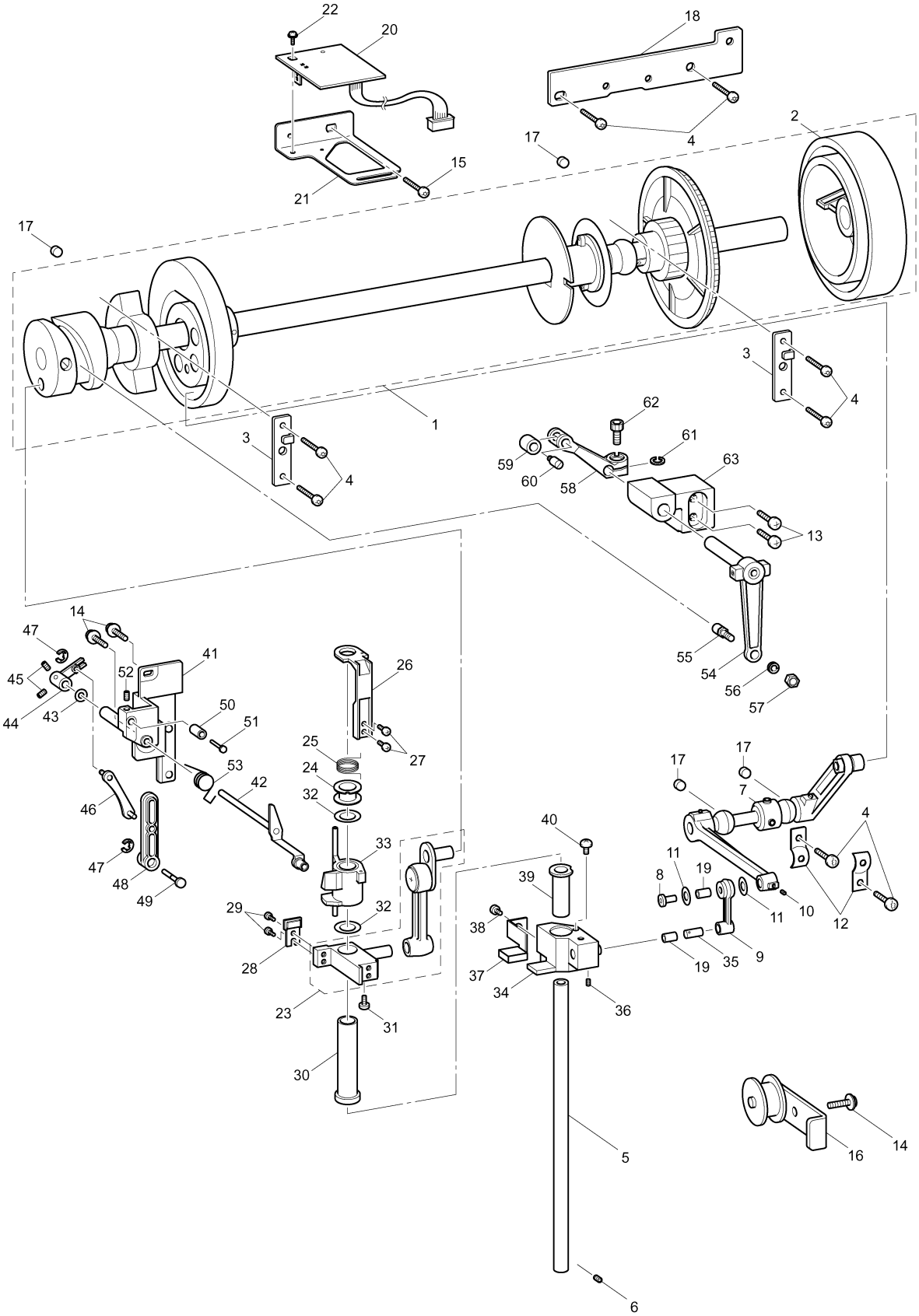

(3) NEEDLE BAR MECHANISM

No.	CODE	NAME	REMARKS
1	XC4954051	NEEDLE BAR CASE ASSY	
2	XC5671051	THREAD TAKE-UP SHAFT	
3	XC5672051	THREAD TAKE-UP BUSH	
4	012400432	SET SCREW, SOCKET (FT) M4X4	
5	XC5673051	THREAD TAKE-UP LEVER ASSY	
6	XC5676051	CASE GUIDE, D	
7	XC5677051	GUIDE RAIL, NEEDLE BAR	
8	004401003	SCREW, FLAT M4X10	
9	XC5678051	TOP DEAD CENTER PLATE	
10	060400616	SCREW, BIND M4X6	
11	XC5679051	NEEDLE BAR	
12	XC5680051	SPRING, NEEDLE BAR	
13	062500816	SCREW, PAN M5X8	
14	118735002	WASHER	
15	S36153100	RUBBER, CUSHION	
16	XC5681051	NEEDLE BAR CLAMP	
17	014680432	SET SCREW, SOCKET SM4.37-40X4	
18	100507050	WASHER	
19	XC5682051	PRESSER FOOT SPRING COLLAR	
20	XC5683051	PRESSER FOOT SPRING	
21	XC5684051	PRESSER FOOT CLAMP	
22	XC5685051	PRESSER FOOT ASSY	
23	XC5688051	SCREW, P/F	
24	XC5689051	PRESSER FOOT CUSHION	
25	XC5690051	THREAD GUIDE, NEEDLE BAR	
26	XC7020051	THREAD GUIDE	
27	XC7021052	SCREW SM 2.38	
28	016300436	SET SCREW, SOCKET (CN) M3X4	
29	XC5691011	NEEDLE HAX130 EBBR	
30	018401632	BOLT, SOCKET M4X16	
31	XC5693051	CASE BRACKET ASSY	
32	070694009	BALL BEARING, RADIAL 694	
33	048030346	RETAINING RING, E3	
34	XC5696051	CASE GUIDE, US	
35	018400832	BOLT, SOCKET M4X8	
36	XC7406051	WASHER	
37	XC5697051	SLIDE ROLLER STOPPER	
38	062300416	SCREW, PAN M3X4	
39	XC5698051	SLIDE ROLLER	
40	XC5699051	CASE GUIDE, UL	
41	XC5700051	CASE GUIDE COVER, UL	
42	018401232	BOLT, SOCKET M4X12	
43	XC5701051	THREAD TAKE-UP GUIDE	
44	062400816	SCREW, PAN M4X8	
45	025040236	WASHER, PLAIN M 4	
46	018501232	BOLT, SOCKET M5X12	
47	028050246	WASHER, SPRING 2-5	
48	XC7249052	NEEDLE BAR FELT S	
49	XC7472051	CASE POSITIONING SHAFT ASSY	
50	XC5702051	CASE POSITIONING PLATE	
51	025040236	WASHER, PLAIN M 4	
52	028040246	WASHER, SPRING 2-4	
53	021400206	NUT, 2 M4	

(3) NEEDLE BAR MECHANISM

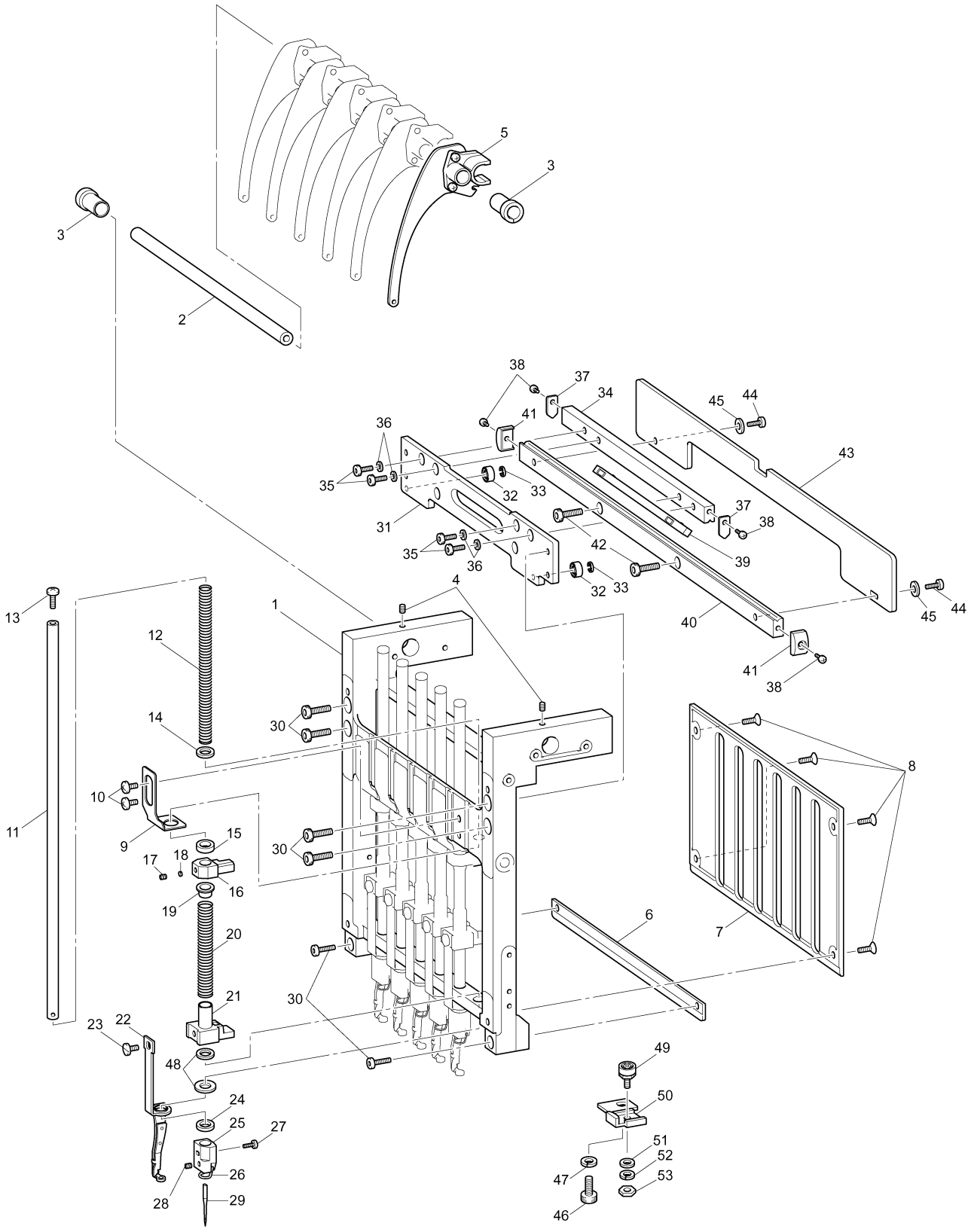

(4) NEEDLE BAR CHANGE MECHANISM

No.	CODE	NAME	REMARKS
1	XC7323051	BOLT.(S/P WASHER)M5X16	
2	XC5717051	CHANGE ROLLER BASE ASSY	
3	004401003	SCREW, FLAT M4X10	
4	XC5705051	CHANGE BOX ASSY	
5	XC5708051	CHANGE CAM SHAFT	
6	XC5709051	CHANGE GEAR	
7	014500632	SET SCREW, SOCKET (CP) M5X6	
8	XC5710051	CHANGE CAM	
9	XC5711051	C STOP POSITION DOG	
10	014400432	SET SCREW, SOCKET (CP) M4X4	
11	X51383050	WASHER,THRUST	
12	XC5712051	DIFFERENTIAL GEAR SHAFT	
13	012400432	SET SCREW, SOCKET (FT) M4X4	
14	XC5713051	C DIFFERENTIAL GEAR	
15	025060235	WASHER, PLAIN M 6	
16	048040346	RETAINING RING, E4	
17	XC5714051	CHANGE MOTOR BASE	
18	XC6185051	ASSY: INDEX MOTOR	
19	062300416	SCREW, PAN M3X4	
20	060400616	SCREW, BIND M4X6	
21	052300606	SCREW, PAN (S/P WASHER) M3X6	
22	XC6140051	ASSY:INDEX SENSOR	
23	XC5715051	C SENSOR BRACKET	
24	XC6143051	ASSY: COLOR CHANGE SENSOR	
25	XC5716051	C SENSOR BRACKET LOWER	

(4) NEEDLE BAR CHANGE MECHANISM

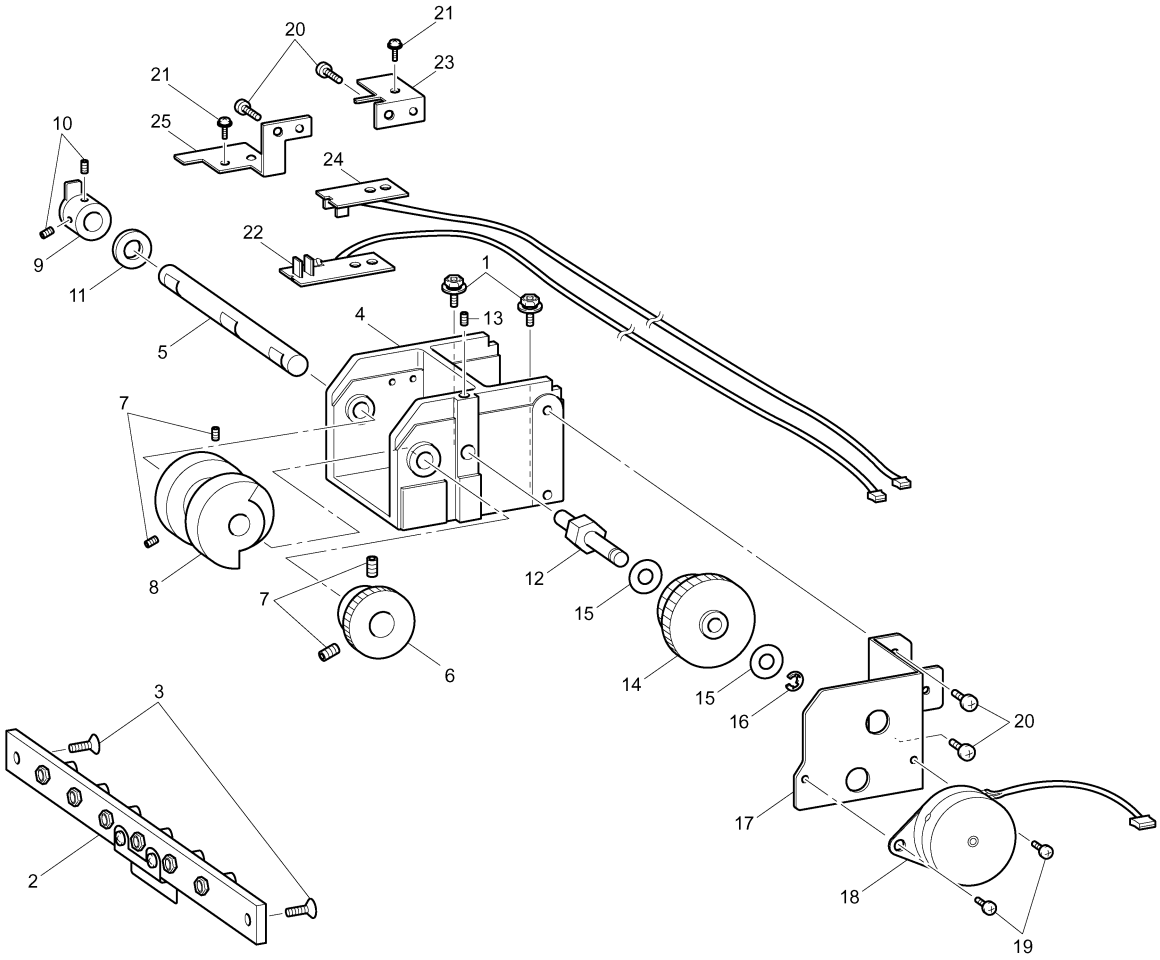

(5) THREAD GUIDE MECHANISM

No.	CODE	NAME	REMARKS
1	X57908051	TAPTITE,BIND S M4X10	
2	XC5723151	THREAD GUIDE BASE	
3	XC5724151	BASE PLATE ASSY	
4	XC5727151	SPACER	
5	062300616	SCREW, PAN M3X6	
6	XC6188051	ASSY: TH MOTOR	
7	XC6507051	RACK ASSY	
8	048040346	RETAINING RING, E4	
9	0A5400806	SCREW, PAN (S/P WASHER) M4X8	
10	025040133	WASHER, PLAIN S 4	
11	XC5730051	HOOK HOLDER LINK	
12	XC5739151	HOOK HOLDER AXIS B	
13	XC6510051	SET COLLAR ASSY	
14	XC5740051	CAP	
15	XC6076151	BUSH	
16	XC7375051	HOOK HOLDER SPRING	
17	014300332	SET SCREW, SOCKET (CP) M3X3	
18	048030346	RETAINING RING, E3	
19	XC5732051	HOOK HOLDER ASSY	
20	XC6158051	ASSY: NEEDLE TH SENSOR	
21	XD1150051	LED LIGHT ASSY	
22	XC7564051	SCREW, PAN(S/P WASHER)M3X6	
23	XD0676051	LEAD WIRE GUIDE	
24	062300416	SCREW PAN M3X4	

(5) THREAD GUIDE MECHANISM

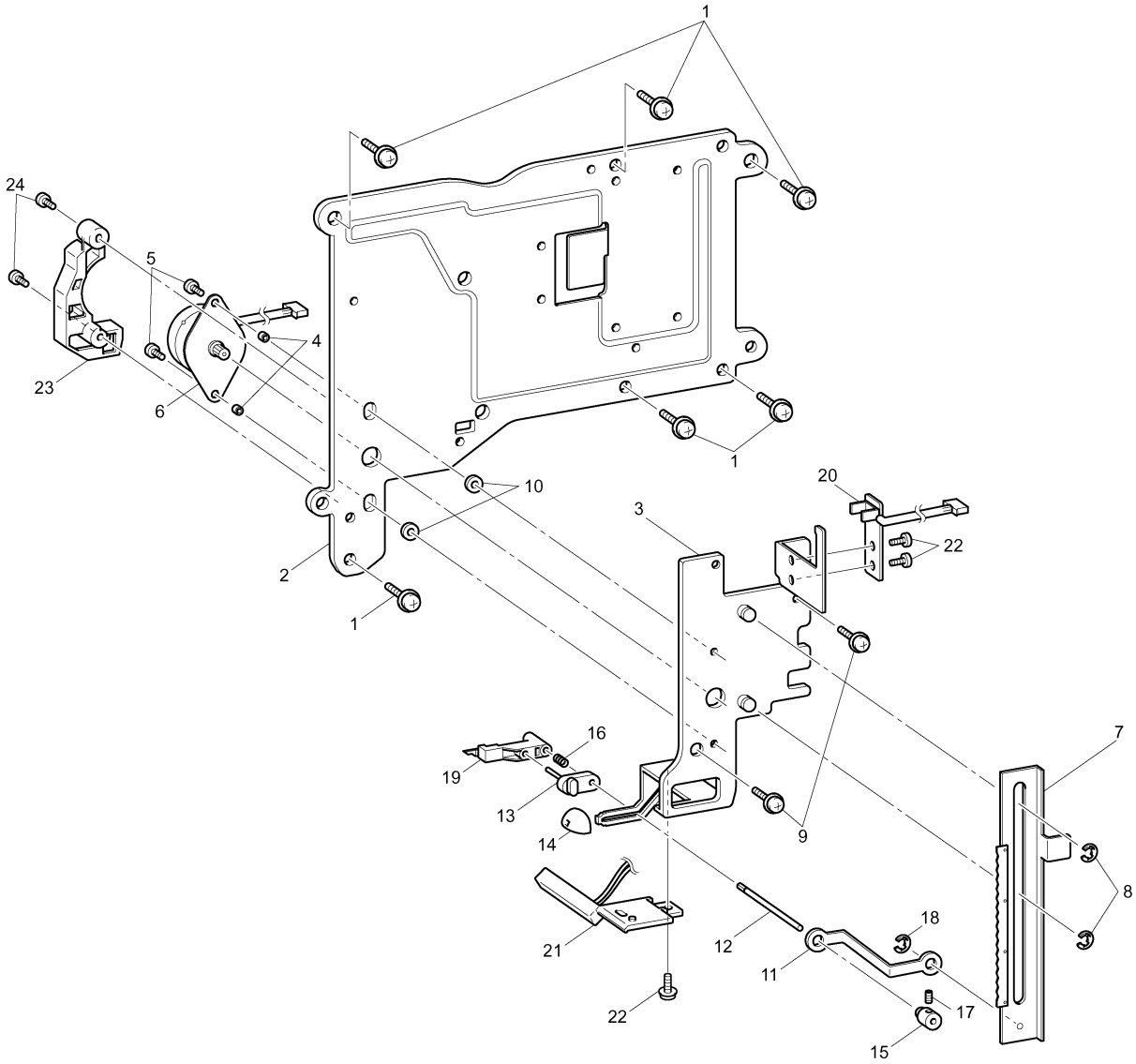

(6) ELECTRONIC PARTS

No.	CODE	NAME	REMARKS
1	XD0667052	OPERATION PANEL A	
2	XD0668051	OPERATION PANEL B	
3	XD0761051	USB CORD HOLDER	
4	XD0757051	PANEL B SUPPORT	
5	XD0669051	PLATE FOR PCB ATTACHMENT	
6	XD0677051	COLLAR FOR INVERTER PCB	
7	XD0759050	GROUND PLATE B	
8	XD0756051	BOARD CASE	
9	XC5743052	SS BUTTON	
10	XC5744052	OPERATION BUTTON	
11	XC5642052	THREAD CUT BUTTON	
12	XD1345051	SUPPLY ASSY:SW PCB	
13	XD1341051	SUPPLY ASSY:TOUCH PANEL	
14	XD1342051	SUPPLY ASSY:LCD	
	XD1343051	SUPPLY ASSY:LCD US	
15	XA6039051	FRONT COVER SPACER B	
16	X59629051	TAPTITE,BIND B M3X10	
17	060300416	SCREW BIND M3X4	
18	XD1338051	SUPPLY ASSY:PANEL PCB B	
19	XC8290051	INVERTER :D6	
20	XD1115051	FFC:SML2CD-20X70	
21	XD1127051	LEAD WIRE ASSY: INVERTER	
22	087411416	TAPTITE, CUP B M4X14	
23	XD1129001	FERRITE CORE:E04FD110510	
24	0A4301006	SCREW PAN (S/P WASHER) M3X10	
25	XD1155051	LEAD WIRE ASSY PANEL	
26	XD1156051	LEAD WIRE ASSY:USB A	
27	137947001	CLIP	
28	XC7233051	CORD BUSHING 5P-4	
29	XD0663051	OPERATION PANEL HOLDER	
30	XC5747051	OPERATION PANEL HOLDER SHAFT	
31	XD0664051	OPERATION PANEL LEVER A	
32	XD0674051	OPERATION PANEL LEVER B	
33	XD0666051	OPERATION PANEL LEVER C	
34	XC5751051	OPERATION PANEL LEVER SHAFT	
35	0A5400806	SCREW, PAN (S/P WASHER) M4X8	
36	XC5553051	THUMB BOLT M4 L	
37	026040236	WASHER, PLAIN M 4	
38	028040246	WASHER, SPRING 2-4	
39	048060346	RETAINING RING, E6	
40	X57908051	TAPTITE,BIND S M4X10	
41	XC5756051	BOARD HOLDER U	
42	XC5757051	BOARD HOLDER D	
43	XC7564051	SCREW, PAN (S/P WASHER) M3X6	

No.	CODE	NAME	REMARKS
44	XC7396051	SUPPLY ASSY:MAIN PCB	
45	XD1079051	LED DRIVE PCB ASSY	
46	XC6198051	LEAD WIRE ASSY:HEAD	
47	XC5069051	SPIRAL TUBE A	
48	XC5073051	SPIRAL TUBE B	
49	XC5078051	SPIRAL TUBE C	
50	XC6407051	SPIRAL TUBE D	
51	XZ0201051	CORD CLAMP:WL-5/8	
52	XC5243051	CORD CLAMP:NK-5N	
53	S10243000	CORD HOLDER, NK-3N	
54	0A5401005	SCREW, PAN (S/P WASHE) M4X10	
55	XC6579051	POWER SUPPLY CORD:CSA-CORE (U.S.A., CANADA)	
	XD0110051	POWER SUPPLY CORD:IRAM-CORE (ALZ)	
	XC6580051	POWER SUPPLY CORD:CEE-CORE (CHI, GER, FRA,, SPA, ITA, EEU, SIN)	
	XC6581051	POWER SUPPLY CORD:BS-CORE (U.K.)	
	XC9560051	POWER SUPPLY CORD:SAA-LF (AUSTRALIA)	
56	XC5157051	PROTECT SHEET	
57	060400516	SCREW, BIND M4X5	
58	XD0673001	PR-600-2 BADGE	

(6) ELECTRONIC PARTS

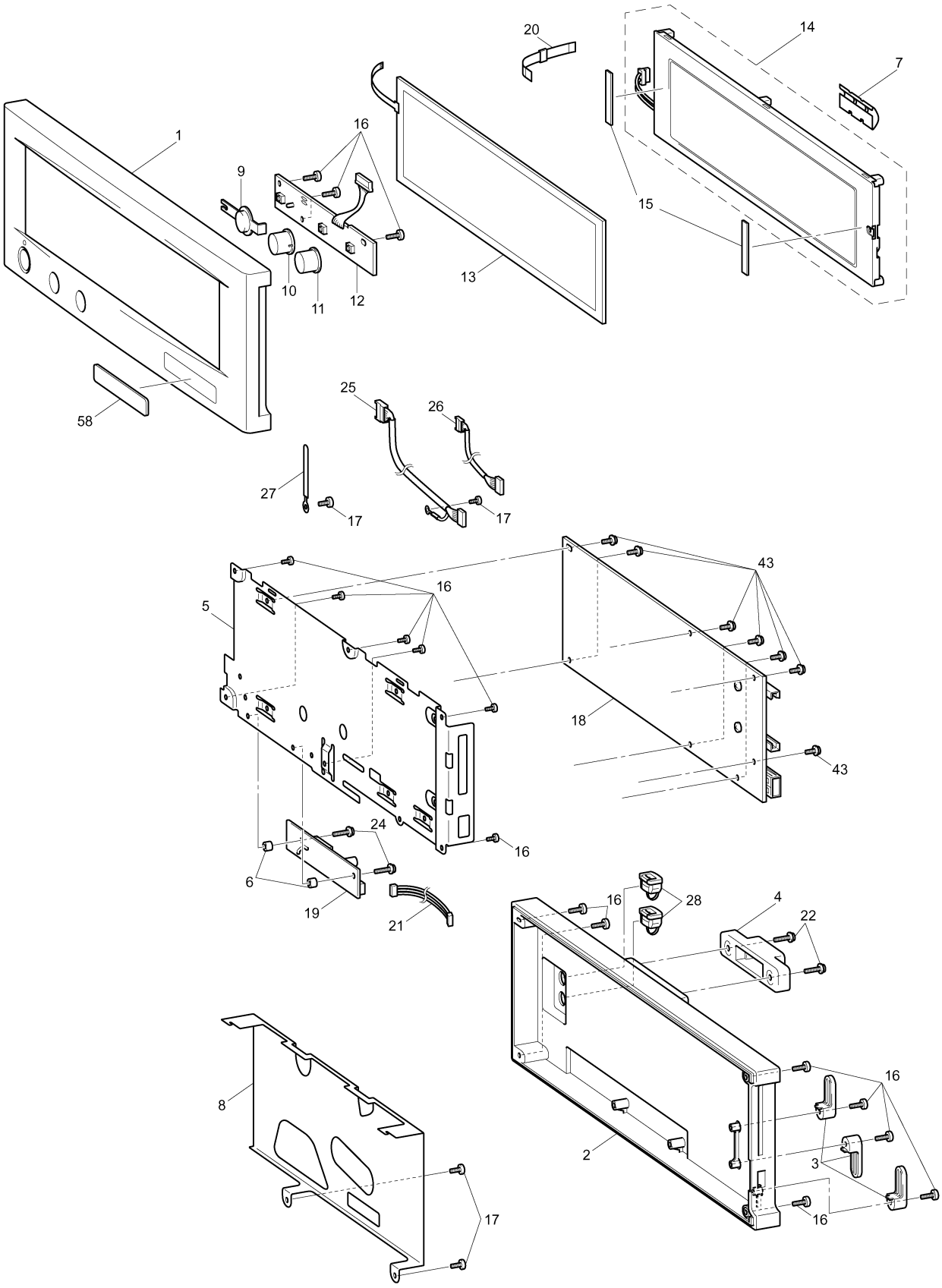

(6) ELECTRONIC PARTS

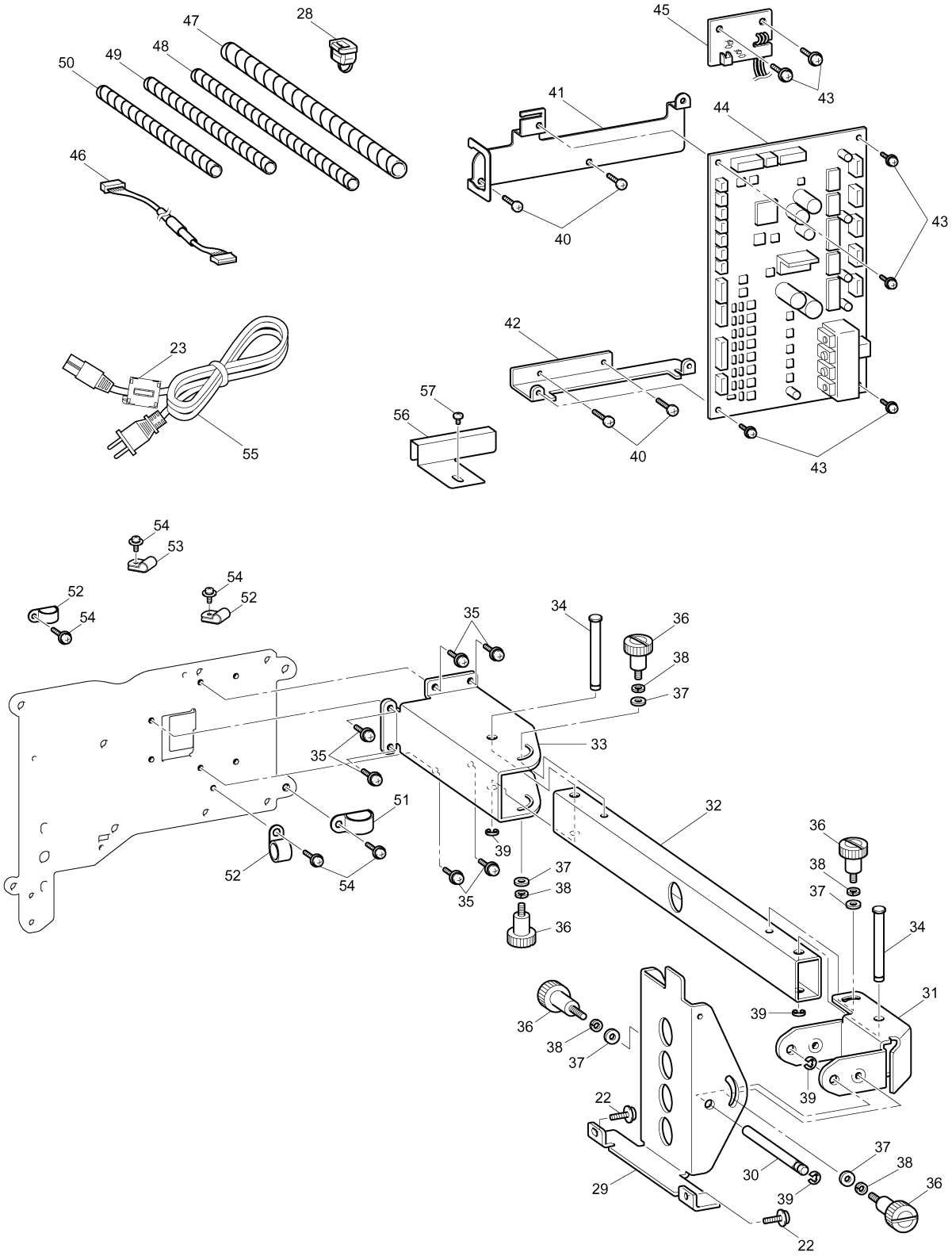

(7) MOTOR UNIT

No.	CODE	NAME	REMARKS
1	XA9644050	T BELT	
2	XA5901051	UP SET	
3	XA9652150	MOTOR FAN	
4	XC5764051	MOTOR HOLDER BASE	
5	X57908051	TAPTITE,BIND S M4X10	
6	XD1151051	MAIN MOTOR ASSY	
7	XC6481051	MOTOR CAP	
8	XA9649050	FENDER RUBBER	
9	XC0443051	SPACER 4X7	
10	XA9650051	MOTOR SPACER PRESSER	
11	052401605	SCREW, PAN (S/P WASHER) M4X16	
12	XC5762051	MOTOR HOLDER	
13	XC5763051	MOTOR HOLDER SPACER	

(7) MOTOR UNIT

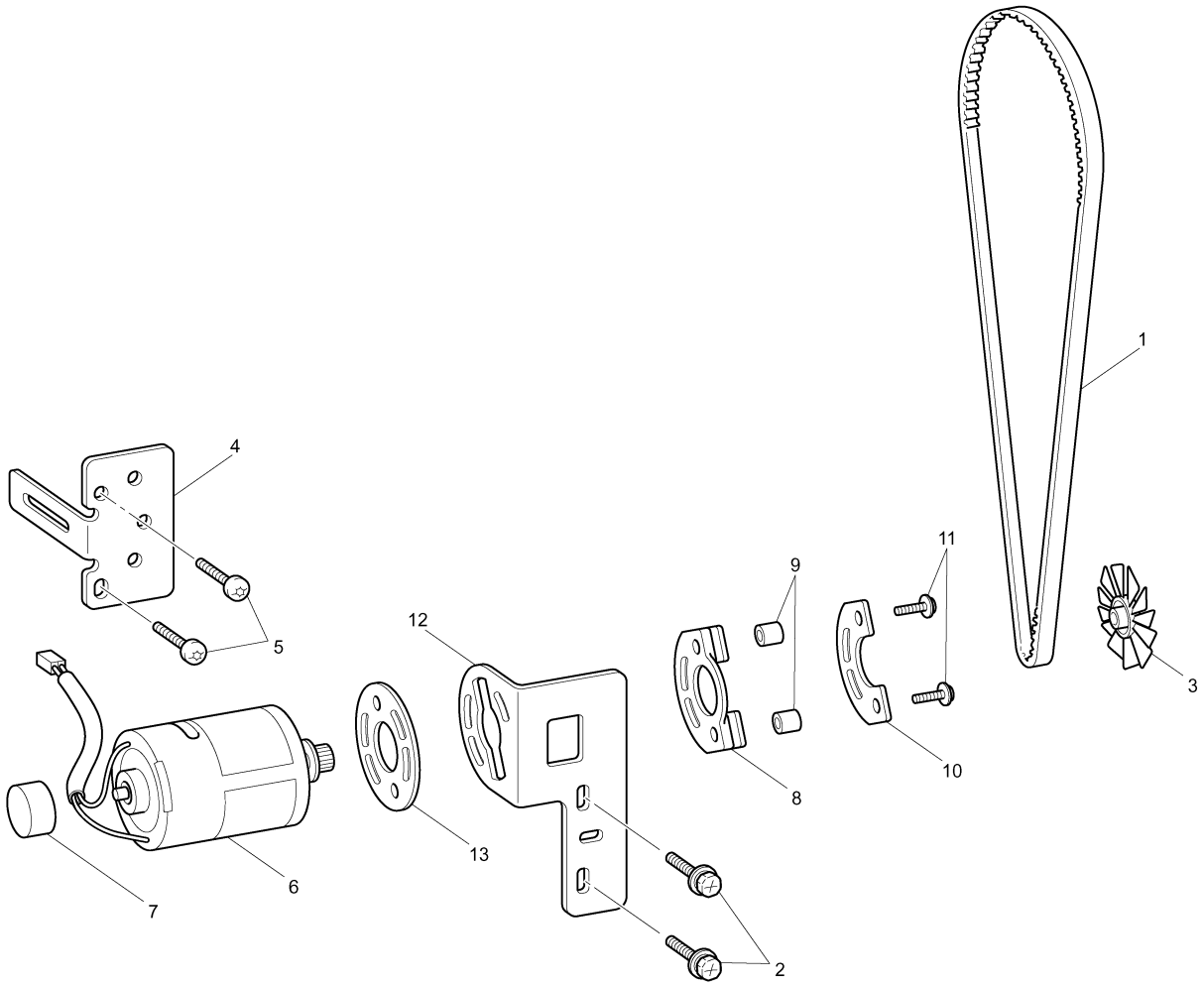

(8) FEED MECHANISM

No.	CODE	NAME	REMARKS
1	XD0747051	ADJUST BOLT M8	050168
2	021080206	NUT, 2 M8	
3	XC5767151	Y DRIVING SHAFT ASSY	
4	X52478051	BUSHING PRESSER	
5	X57908051	TAPTITE,BIND S M4X10	
6	XC5771051	Y TENSION PLATE SET	
7	0A5401006	SCREW, PAN (S/P WASHE) M4X10	
8	XC5775051	T BELT B60S3M579	
9	XC5776051	Y CARRIAGE R	
10	XC5777051	Y CARRIAGE L	
11	XC5779051	BEARING CASE Y	
12	XC5780001	BEARING 10 ,LINER	
13	048190142	RETAINING RING, EXTERNAL C19	
14	0A4301006	SCREW, PAN (S/P WASHE) M3X10	
15	XC5781051	Y BELT PRESSER	
16	085301217	TAPTITE, BIND P M3X12	
17	XC5782051	Y SENSOR DOG	
18	060300416	SCREW, BIND M3X4	
19	XC5783051	Y GUIDE SHAFT	
20	XC5784051	FIXED Y SHAFT PLATE	
21	XC5785051	FEED FRAME ASSY	
22	0A5400806	SCREW, PAN (S/P WASHER) M4X8	
23	XA9657051	TENSION PULLEY ASSY	
24	060400616	SCREW, BIND M4X6	
25	XC3227001	Y DRIVING GEAR PULLEY A	
26	XC3194051	SPRING FOR GEAR	
27	XC3192001	Y DRIVING GEAR PULLEY B	
28	025060235	WASHER, PLAIN M 6	
29	048040346	RETAINING RING, E4	
30	X53838051	WASHER	
31	XC5788051	T BELT B60S796	
32	XC5789051	X GUIDE SHAFT	
33	021060206	NUT, 2 M6	
34	028060246	WASHER, SPRING 2-6	
35	XC5790051	X CARRIAGE B	
36	XC5792051	BEARING CASE X ASSY	
37	048040346	RETAINING RING, E4	
38	XC6222001	BEARING 12 LINER	
39	048210142	RETAINING RING, EXTERNAL C21	
40	048040346	RETAINING RING, E4	
41	XC5796051	X ROLLER	
42	XC6221051	X FEED FRAME B	
43	XC6218051	Y FRAME SPACER	
44	XC5798051	X BELT PRESSER	

No.	CODE	NAME	REMARKS
45	XC5799051	X CARRIAGE A ASSY	
46	XC6220001	X CARRIAGE SLIDING SHEET	
47	XC5801051	HOOP LEVER	
48	012300632	SET SCREW, SOCKET (FT) M3X6	
49	XC5802051	SPRING	
50	025060136	WASHER, PLAIN S 6	
51	X52569001	NUT	
52	XC5803051	X SENSOR DOG	
53	XC5804051	X CABLE FIXING SHEET A	
54	XC5805051	X CABLE FIXING SHEET B	
55	XC7564051	SCREW, PAN (S/P WASHER) M3X6	
56	XC5806051	X CABLE FIXING SHEET C	
57	XC5807051	PCB SET PLATE	
58	XC5808051	Y CABLE PROTECTION SHEET A	
59	XC6121051	Y CABLE PROTECTION SHEET B	
60	XC5809051	CODE GRIP	
61	XC5817051	SCREW, KNOB M4S	
62	X59629051	TAPTITE,BIND B M3X10	
63	XC5834051	HANDLE	
64	XC5835051	BUSH 4X4	
65	XC5836051	CAP CONNECTION	
66	061300616	SCREW, FLAT M3X6	
67	XC5838051	USB PCB HOLDER	
68	XC5837052	USB PCB COVER	
69	XC5839051	INLET COVER	
70	XC6072051	INLET COVER LID	
71	XA8837051	CORD CLAMP	
72	XA7678051	CORD CRAMP	
73	XC6569051	FERRITE CORE:E04SR200935A	
74	XC6201051	ASSY: POWER SW (U.S.A., CANADA)	
	XC5644051	ASSY:POWER SW EC	
75	XC5840052	SWITCH HOLDER	
76	XC6174051	ASSY: USB PCB	
77	XC6146051	ASSY: X AREA SENSOR	
78	XC6148051	ASSY: Y AREA SENSOR	
79	XC6169051	ASSY: HOOP PCB	
80	XC6171051	ASSY: CONNECT PCB	
81	XC6177051	ASSY: HOOP SENSOR	
82	XC6182051	ASSY: X MOTOR	
83	XC6189051	FFC:SML2CD-Y	
84	XC6190051	FFC:SML2CD-C	
85	XC6191051	FFC:SML2CD-X	
86	XC6219051	X FRAME SPACER	
87	XC6500051	Y CARRIAGE RB	

(8) FEED MECHANISM

No.	CODE	NAME	REMARKS
88	XC3183051	FELT	
89	018300532	BOLT, SOCKET M3X5	
90	XC7077051	SCREW 3X10	
91	XC5819051	TUBULAR ROUND ARM R ASSY	
92	XC7076051	SPRING,PLATE	
93	XC7644051	SCREW, PAM (S/P WASHER) M3X5	
94	XC5823051	TUBULAR ROUND ARM L ASSY	
95	XC7076051	SPRING,PLATE	
96	XC7644051	SCREW, PAM (S/P WASHER) M3X5	
97	XC5827051	GUIDE PLATE ASSY	
98	XC5826051	SPRING PLATE	
99	XC5813051	HOOP STAY ASSY	
100	048030346	RETAINING RING, E3	
101	XC5816051	RUBBER	
102	0A5400806	SCREW, PAN (S/P WASHER) M4X8	
103	XC5841051	TUBULAR ARM COVER L	
104	XC5553051	THUMB BOLT M4 L	
105	XC5842051	TUBULAR ARM COVER R	
106	136681051	TAPTITE, BIND B M3X8	
107	XC5832251	POWER UNIT COVER	
108	XC5833051	INSULATION PLATE	
109	X59629051	TAPTITE,BIND B M3X10	
110	XC7616051	SUPPLY ASSY:POWER PCB 100 (U.S.A., CANADA)	
	XC7398051	SUPPLY ASSY:POWER PCB 200	
111	XC6209051	LEAD WIRE ASSY:POWER	
112	XC5831051	POWER UNIT STAY	
113	0A5401206	SCREW, PAN (S/P WASHE) M4X12	
114	XC5810051	Y MOTOR STAY	
115	0A4300605	SCREW, PAN (S/P WASHER) M3X6	
116	XC6183051	ASSY: Y MOTOR	

(8) FEED MECHANISM

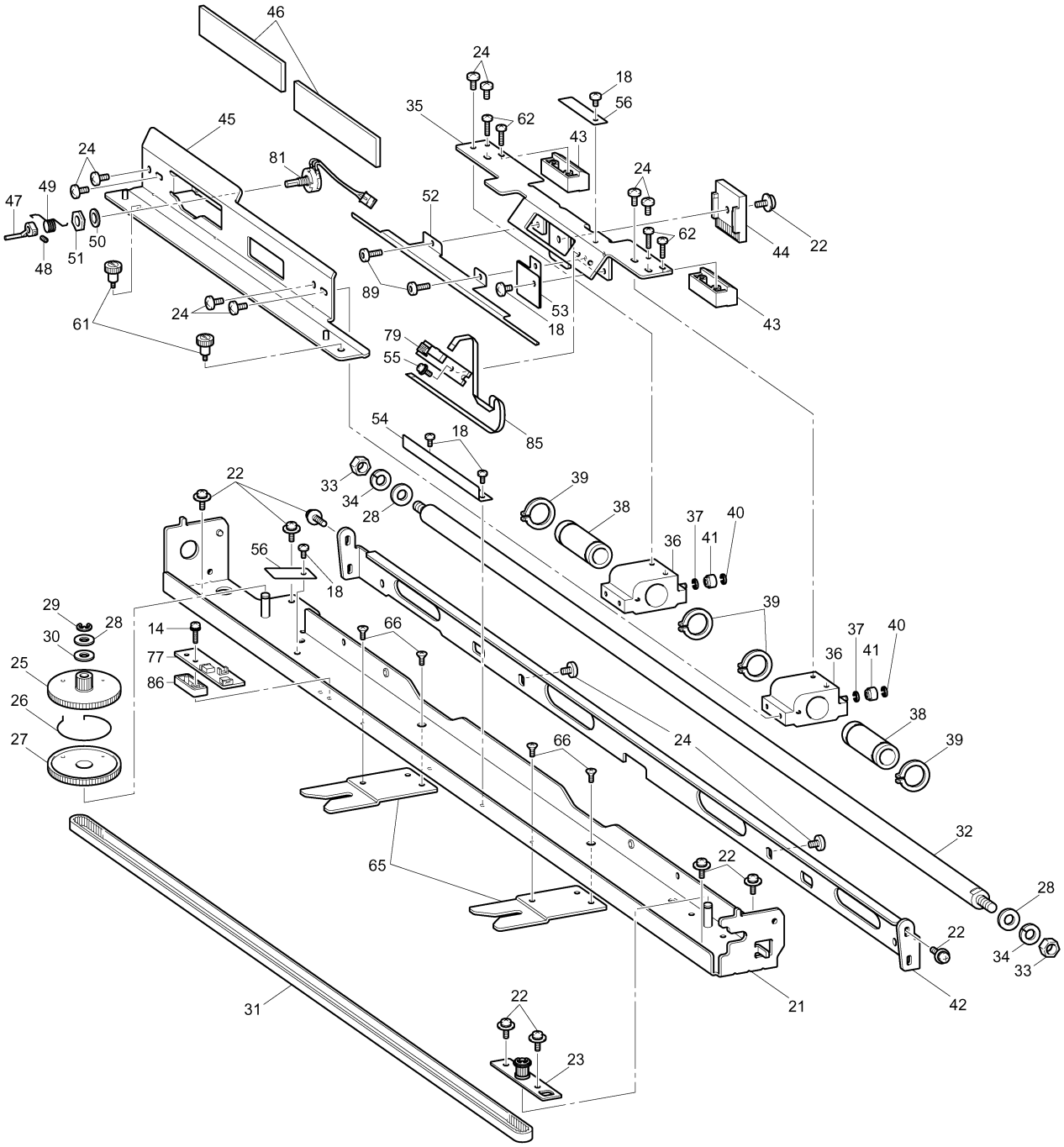

(8) FEED MECHANISM

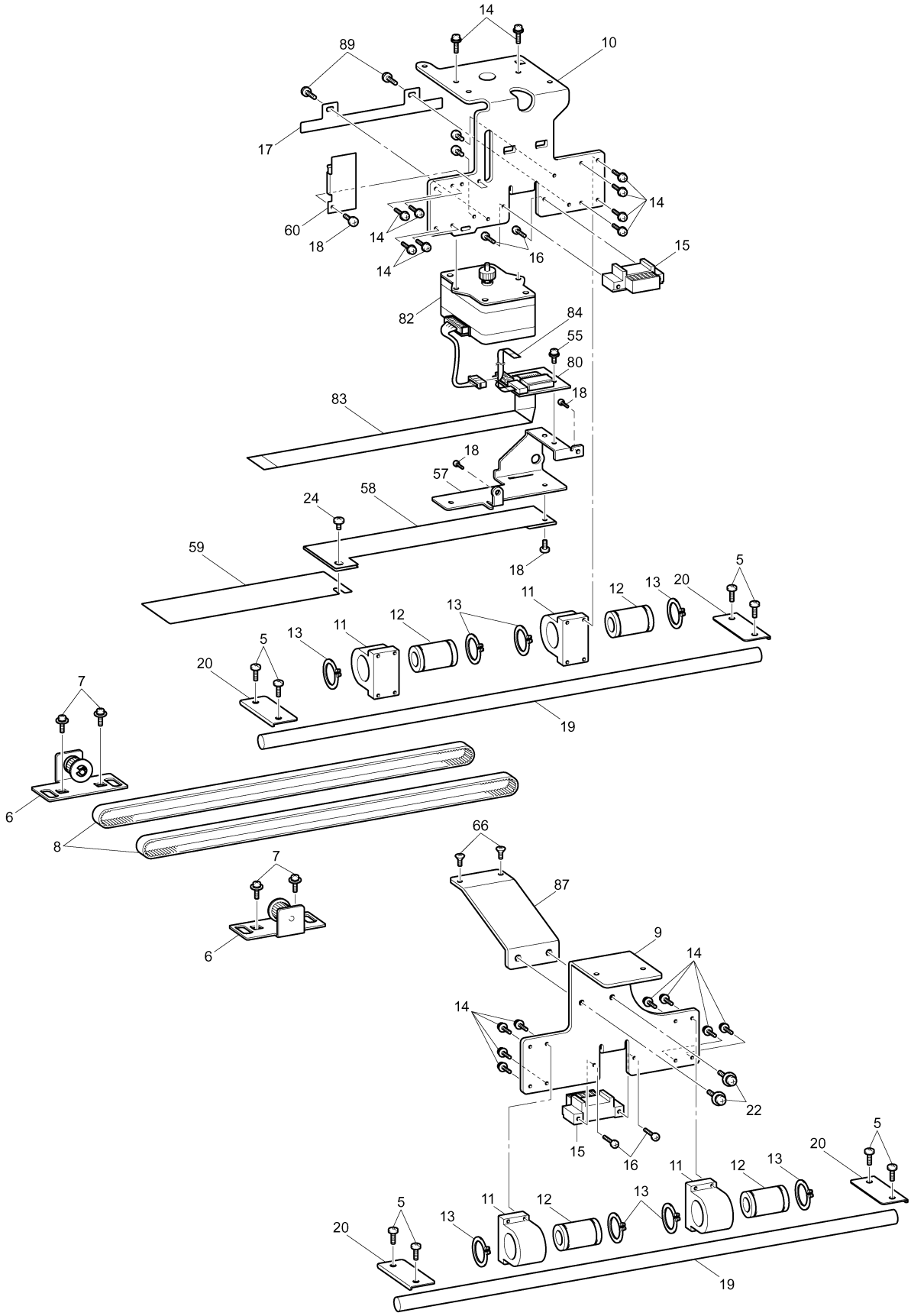

(8) FEED MECHANISM

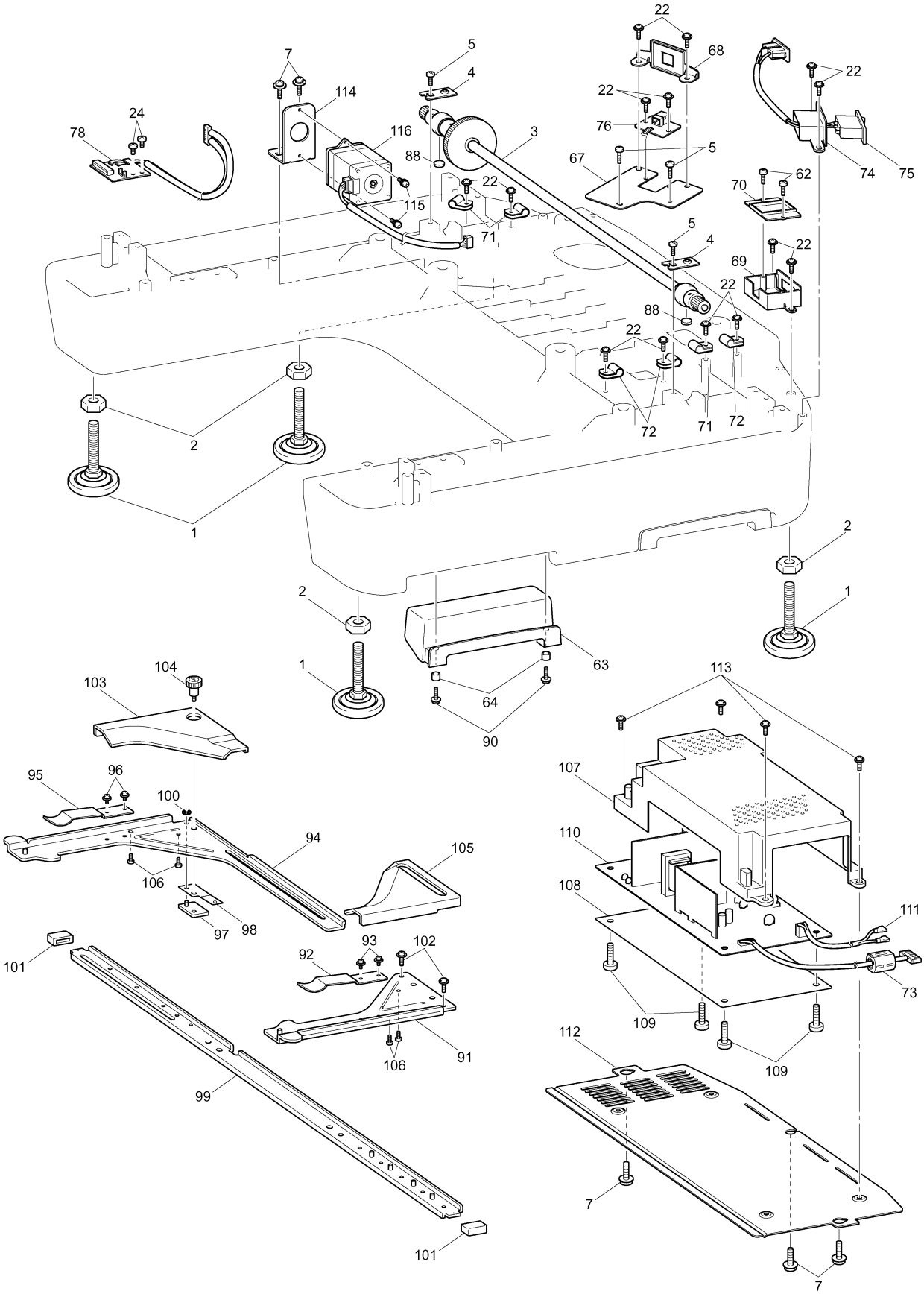

(9) LOWER SHAFT MECHANISM

No.	CODE	NAME	REMARKS
1	XC5843051	LOWER SHAFT	
2	XC5630051	LOWER SHAFT METAL ,F	
3	XA0840051	COLLAR	
4	XC5845051	LOWER SHAFT METAL ,R	
5	XA0835050	WASHER. THURST 7.24	
6	XA0841051	LOWER SHAFT GEAR	
7	014060632	SET SCREW, SOCKET (CP) M6X6	
8	X57943051	BUSHING PRESSER	
9	X57908051	TAPTITE,BIND S M4X10	
10	XC6924001	ROTARY HOOK,DB1-ATR(1QB)	
11	XC7206001	BOBBIN CASE ASSY	
12	XC5846051	T BELT-S5M-525	
13	XC3183051	FELT	
14	XC5847051	IDLE PULLEY SHAFT	
15	048070346	RETAINING RING, E7	
16	X51383050	WASHER,THRUST	
17	XC1268050	IDLE PULLEY	
18	137768151	SET SCREW COLLAR	
19	014400432	SET SCREW, SOCKET (CP) M4X4	
20	XC7271001	HOOK SET SCREW4.46	

(9) LOWER SHAFT MECHANISM

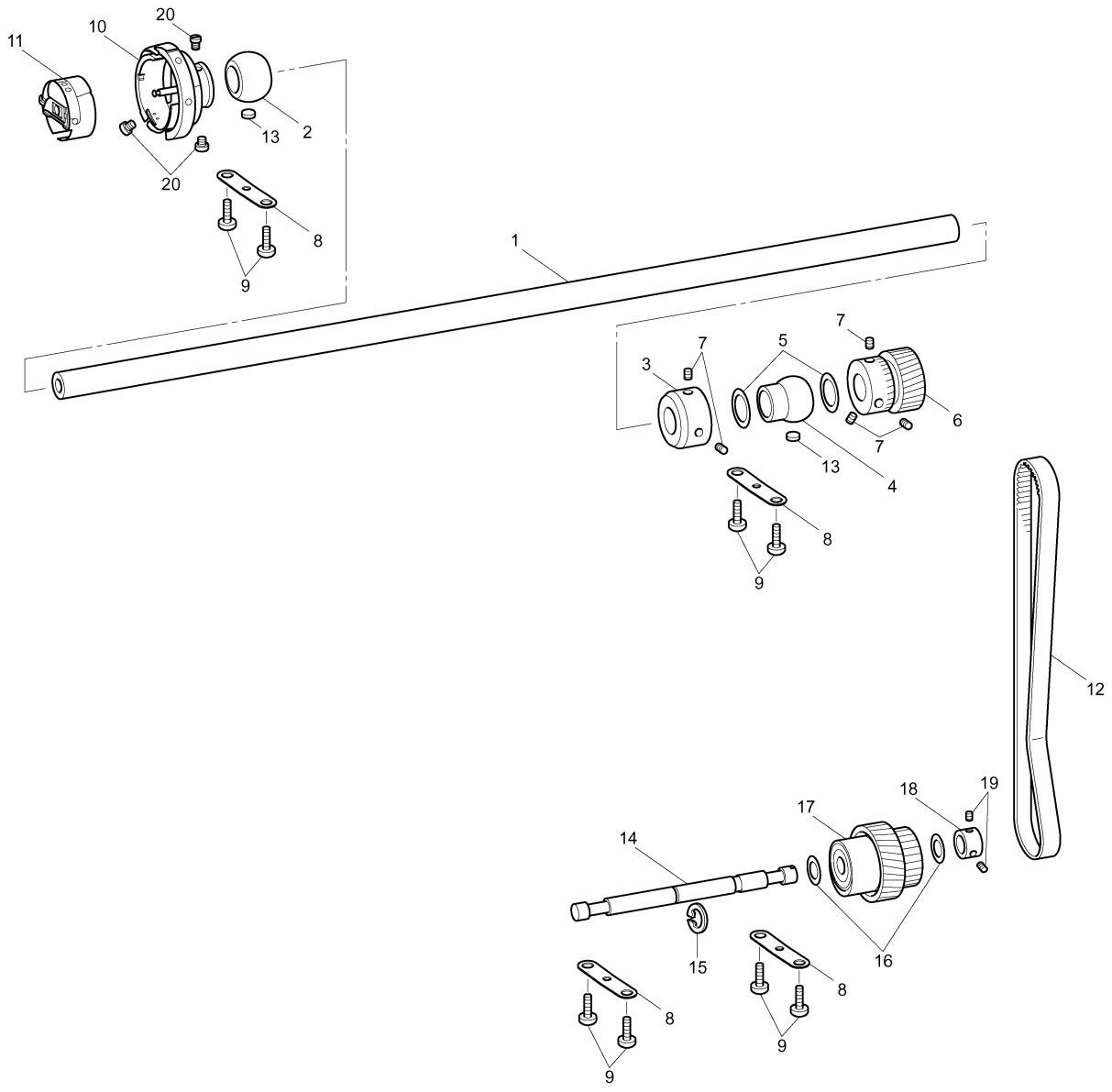

(10) THREAD CUTTING MECHANISM

No.	CODE	NAME	REMARKS
1	060400616	SCREW, BIND M4X6	
2	048020346	RETAINING RING, E2	
3	XC5871051	CUTTER LINK ASSY	
4	060300416	SCREW, BIND M3X4	
5	XC5874051	BED COVER	
6	XC5875051	NEEDLE PLATE	
7	XC6404051	SCREW,FLAT M4	
8	062400816	SCREW, PAN M4X8	
9	XC5984051	FELT	
10	XC5858051	CT MOTOR BRACKET ASSY	
11	XC5863051	CUTTER BRACKET	
12	XC5864051	COLLAR	
13	000401605	SCREW, BIND M4X16	
14	XC5865051	INITIAL GEAR	
15	048020346	RETAINING RING, E2	
16	XC5866051	LEVER GEAR	
17	XC6184051	ASSY: TH CUTTER MOTOR	
18	060300416	SCREW, BIND M3X4	
19	XC6152051	ASSY: TH CUTTER SENSOR	
20	052300606	SCREW, PAN (S/P WASHER) M3X6	
21	XC5868051	LEVER LINK ASSY	
22	048040346	RETAINING RING, E4	
23	XC6187051	ASSY: PICKER MOTOR	
24	026030136	WASHER, PLAIN S 3	
25	048020346	RETAINING RING, E2	
26	060300416	SCREW, BIND M3X4	
27	XC5510051	PK MOTOR BRACKET ASSY	
28	XC5513151	RACK ASSY	
29	XC6161051	ASSY: PICKER SENSOR	
30	052300606	SCREW, PAN (S/P WASHER) M3X6	
31	XC5856051	PICKER LINK	
32	026030136	WASHER, PLAIN S 3	
33	048020346	RETAINING RING, E2	
34	XC5849151	PICKER ASSY	
35	XC5853051	PICKER SPRING	
36	XC5854051	PICKER BRACKET	
37	048020346	RETAINING RING, E2	
38	XC6634151	PICKER HOLDER	
39	018300532	BOLT, SOCKET M3X5	
40	XC5876051	NEEDLE PLATE BASE ASSY	
41	XC6230051	THREAD HOLDING PLATE	
42	XC5881051	SCREW	
43	XC5882001	FIXED KNIFE	
44	S32476001	COLLAR, M-KNIFE	
45	XC6908051	MOVABLE KNIFE SUPPLY ASSY	
46	S32475001	SCREW, M4	
47	XC5879051	ROTARY HOOK STOPPER	
48	018300636	BOLT, SOCKET M3X6	

(10) THREAD CUTTING MECHANISM

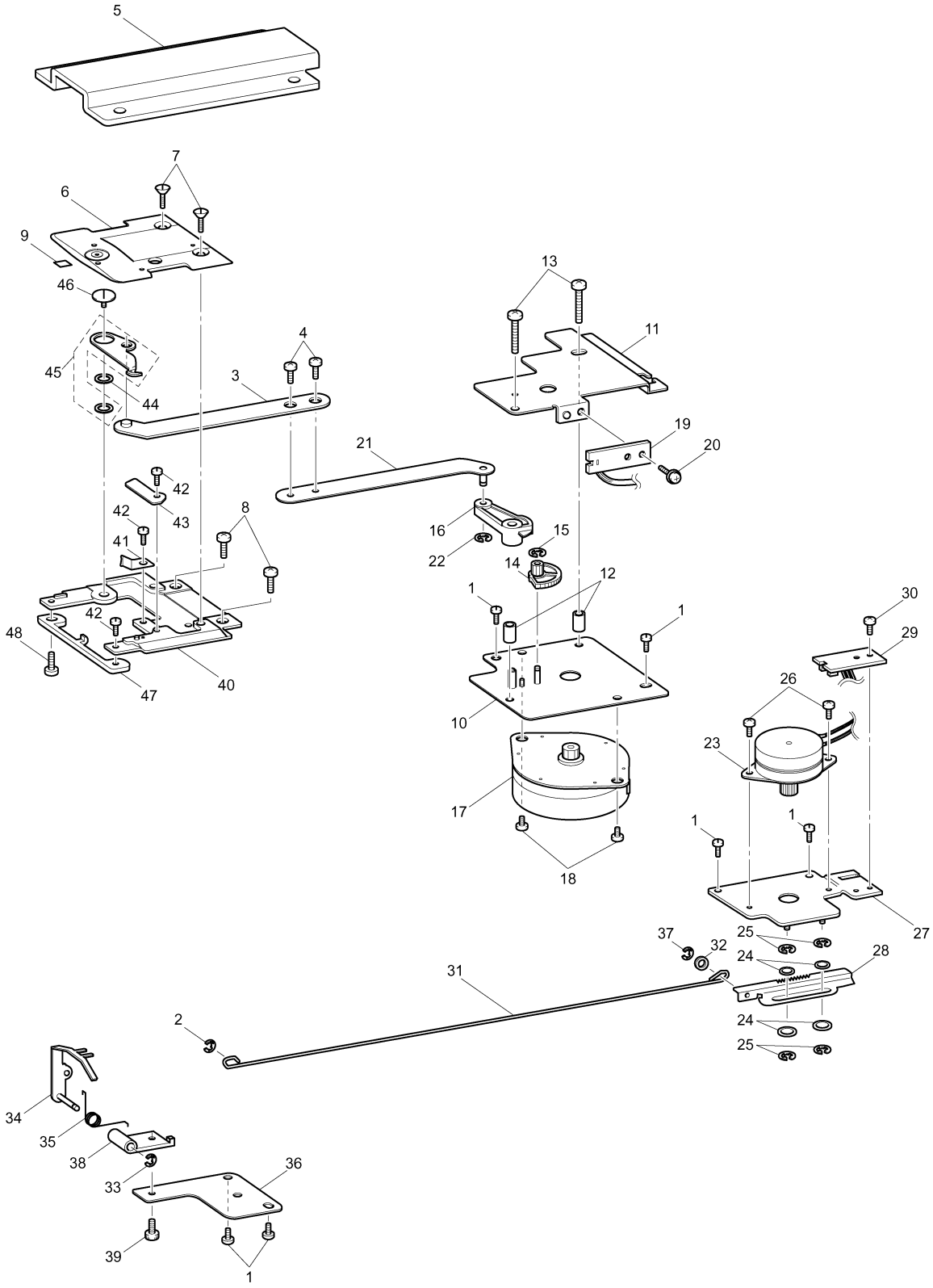

(11) THREAD WIPER MECHANISM

No.	CODE	NAME	REMARKS
1	X57908051	TAPTITE,BIND S M4X10	
2	060400616	SCREW, BIND M4X6	
3	XC5896051	THREAD PRESSER BASE ASSY	
4	XC5899051	THREAD PRESSER COVER ASSY	
5	XC5902051	THREAD PRESSER SPACER	
6	S46404001	SCREW, PAN M3X7	
7	XC5888051	WIPER LINK ASSY	
8	XC5891151	WIPER HOOK	
9	XC5892051	WIPER SHOULDER SCREW	
10	028040246	WASHER, SPRING 2-4	
11	021400305	NUT, 3 M4	
12	XC6186051	ASSY: WIPER MOTOR	
13	062300416	SCREW, PAN M3X4	
14	052300606	SCREW, PAN (S/P WASHER) M3X6	
15	XC5893151	WIPER GUIDE	
16	XC5894051	WIPER CUSHION	
17	XC6155051	ASSY: WIPER SENSOR	
18	062300616	SCREW, PAN M3X6	
19	XC5887151	WIPER LEVER	
20	X53838051	WASHER	
21	025050236	WASHER, PLAIN M 5	
22	048040346	RETAINING RING, E4	
23	025060235	WASHER, PLAIN M 6	
24	XC5884051	WIPER BASE ASSY	

(11) THREAD WIPER MECHANISM

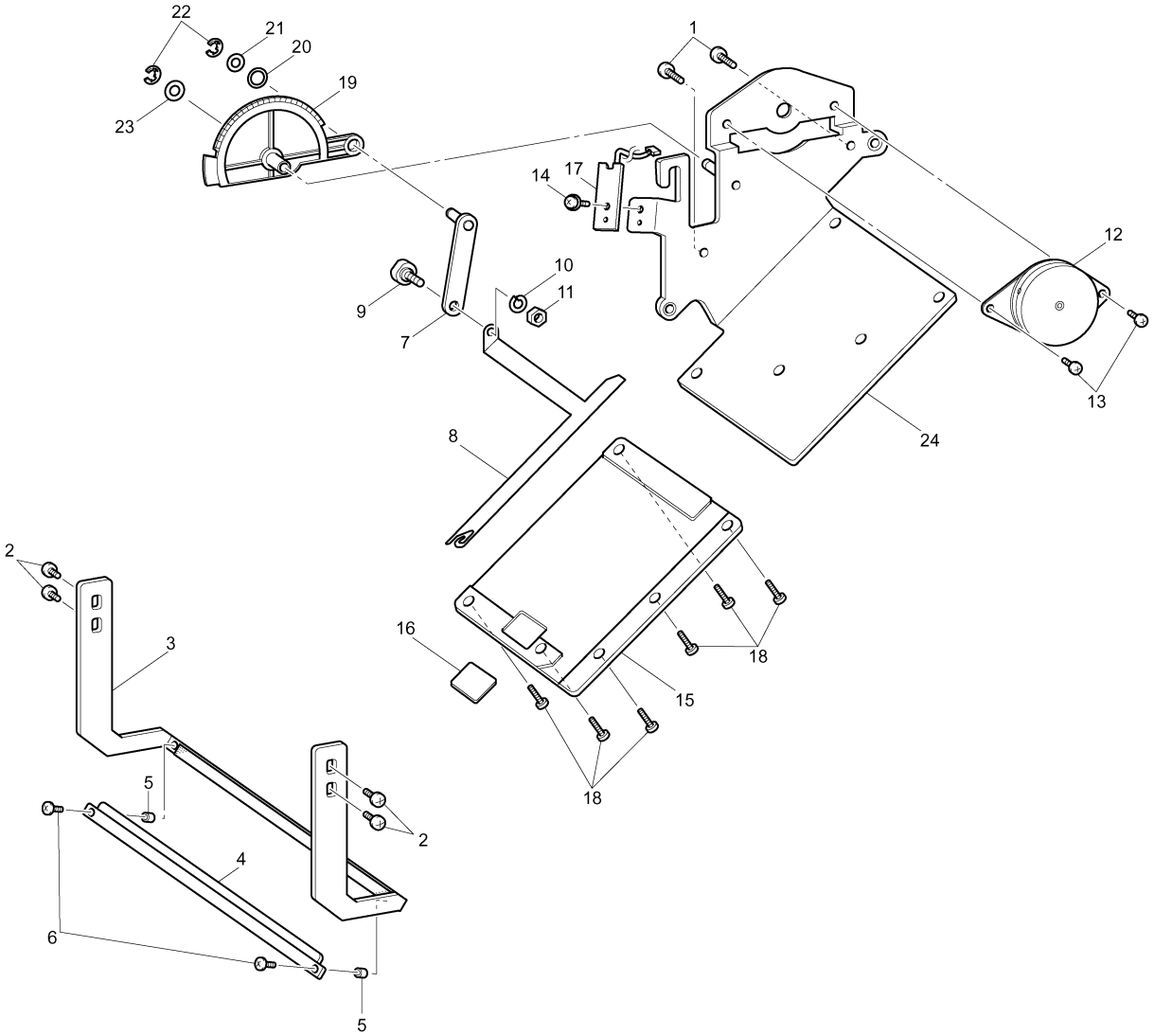

(12) UPPER THREAD GUIDE MECHANISM

No.	CODE	NAME	REMARKS
1	XC6350151	TENSION BASE ASSY	
2	XC5905051	UPPER THREAD EYELET BASE	
3	XC6231051	THREAD GUIDE COMPRESSION	
4	XC5909051	THREAD GUIDE TENSION SCREW	
5	XC5907051	THREAD GUIDE TENSION PLATE	
6	021300205	NUT, 2 M3	
7	XC5908051	INNER THREAD EYELET BASE	
8	XC5906051	THREAD GUIDE TENSION AXIS	
9	XZ0198051	BOBBIN WINDER COMPRESSION	
10	136681051	TAPTITE, BIND B M3X8	
11	XC6164051	ASSY: HEAD PCB	
12	138433051	TAPTITE,PAN B M3X6	
13	XC5911051	THREAD TENSION BRACKET	
14	XC5914151	THREAD QUANTITY SENSOR COVER	
15	XC6167051	ASSY: TH SENSOR	
16	XC6192051	FFC:SML2CD-H	
17	XC5880051	RUBBER WASHER	
18	138334051	RETAINING RING,CS2	
19	S36299001	TENSION DISC FELT	
20	XC7602000	ROTARY DISC ASSY B	
21	XC5915051	TENSION DISC PRESSER	
22	XC6232051	TENSION SPRING	
23	S30564000	WASHER	
24	XC5916051	TENSION NUT	
25	XC6199051	LEAD WIRE ASSY:HEAD EARTH	
26	XC5917051	TENSION BASE BRACKET	
27	XC5883051	COLOR SHEET R	
28	XC5895051	COLOR SHEET L	
29	XC6202051	BRACKET COVER	
30	085410816	TAPTITE, BIND B M4X8	
31	085411416	TAPTITE, BIND B M4X14	
32	052300606	SCREW, PAN (S/P WASHER) M3X6	
33	XC5919051	TENSION AXIS CAP	
34	XC5920052	THREAD TAKE-UP LEVER COVER	
35	XC6001051	THREAD GUIDE COVER	
36	XC5921051	THREAD TAKE-UP BRACKET ASSY	
37	XC5925051	SPRING TAPE	
38	XC6463051	THREAD CATCHING SPRING CASE	
39	XC5926051	THREAD TAKE-UP SPRING	
40	0A4300606	SCREW, PAN (S/P WASHER) M3X6	
41	XC5929051	THREAD GUIDE WIRE	
42	XC6234051	THREAD GUARD	
43	XC5930051	THREAD TENSION BRACKET BASE	
44	060300416	SCREW, BIND M3X4	

No.	CODE	NAME	REMARKS
45	XC5931051	THREAD HOLDER BASE	
46	XC5947051	NEEDLE THREAD PRESSER PLATE	
47	XC5962051	SPRING	
48	048015346	RETAINING RING, E1.5	
49	XC5967051	CUTTER COVER ASSY	
50	XC5972051	CUTTER COVER	
51	X80321001	NT LOWER THREAD CUTTER	
52	138384051	RETAINING RING,CS5	
53	0A5300606	SCREW, PAN (S/P WASHER) M3X6	
54	085311016	TAPTITE, BIND B M3X10	
55	XC5934051	THREAD GUIDE BACK COVER	
56	060260316	SCREW, BIND M2.6X3	
57	0A5401006	SCREW, PAN (S/P WASHE) M4X10	
58	XC5935051	STUD	
59	060400816	SCREW, BIND M4X8	
60	XC5812051	PIPE BUSH A	
61	081005070	O RING, P5	
62	XC7254051	WASHER	
63	XC5938051	SPOOL STAND FRAME	
64	XC5939051	SPOOL STAND STUD	
65	XC5943051	STUD SCREW	
66	XC5945051	SPRING WASHER	
67	XC5946051	SPOOL STAND LINK	
68	XA9677051	WASHER	
69	048080346	RETAINING RING, E8	
70	XC5936051	SPOOL STAND BASE	
71	XC5948051	SPACER	
72	XC5553051	THUMB BOLT M4 L	
73	XC5949051	SPOOL PIN	
74	XC5950051	SPONGE	
75	XC5830051	ANTENNA E	
76	XC5812051	PIPE BUSH A	
77	081005070	O RING, P5	
78	048050346	RETAINING RING, E5	
79	XC6238051	ANTENNA SHAFT	
80	XC6237051	ANTENNA D	
81	XC5951051	ANTENNA C ASSY	
82	060400616	SCREW, BIND M4X6	
83	XC6236051	ANTENNA B	
84	XC6235051	ANTENNA A	
85	060300616	SCREW, BIND M3X6	
86	XD0177051	TH SENSOR SUPPLY ASSY	

(12) UPPER THREAD GUIDE MECHANISM

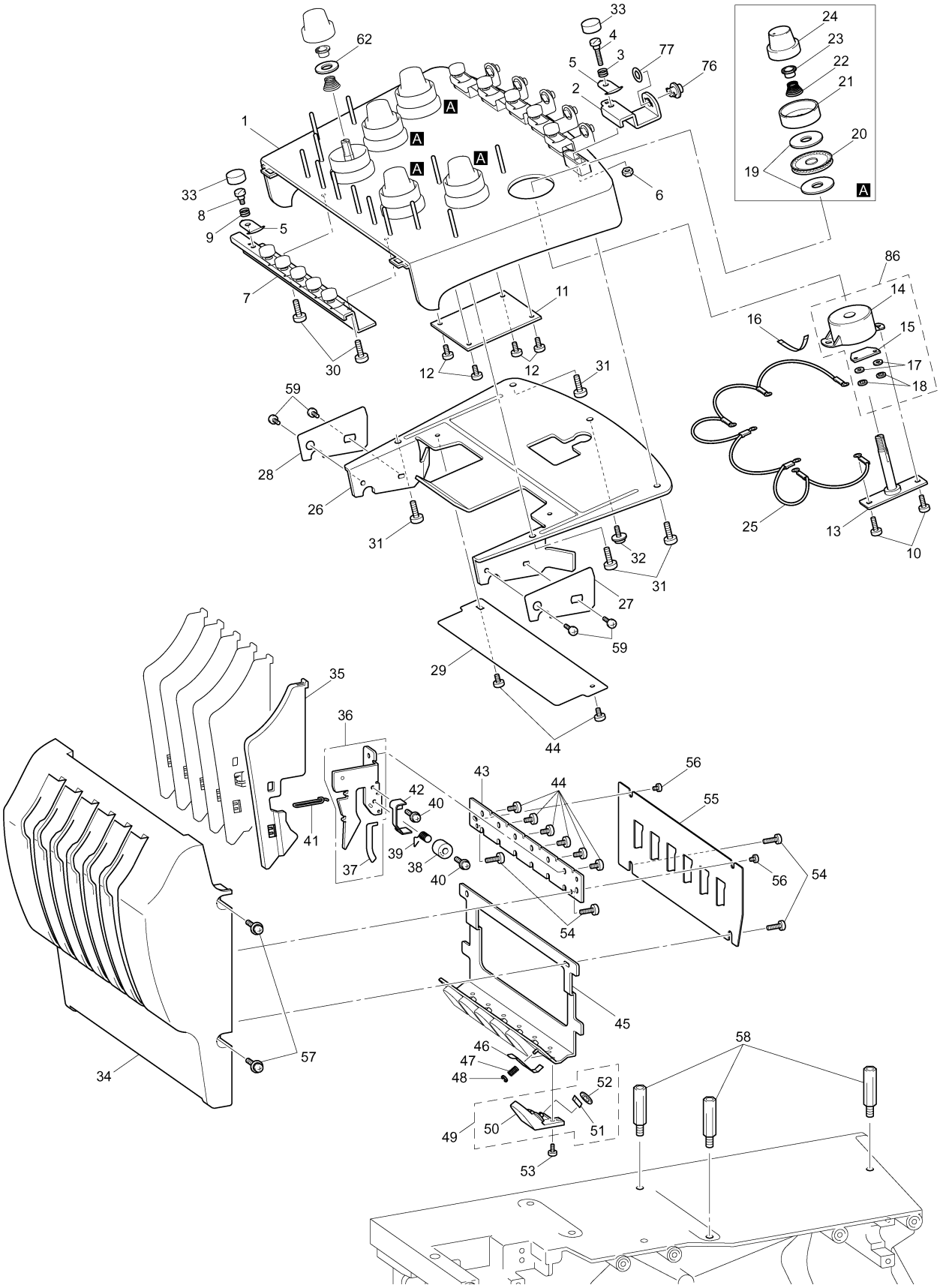

(12) UPPER THREAD GUIDE MECHANISM

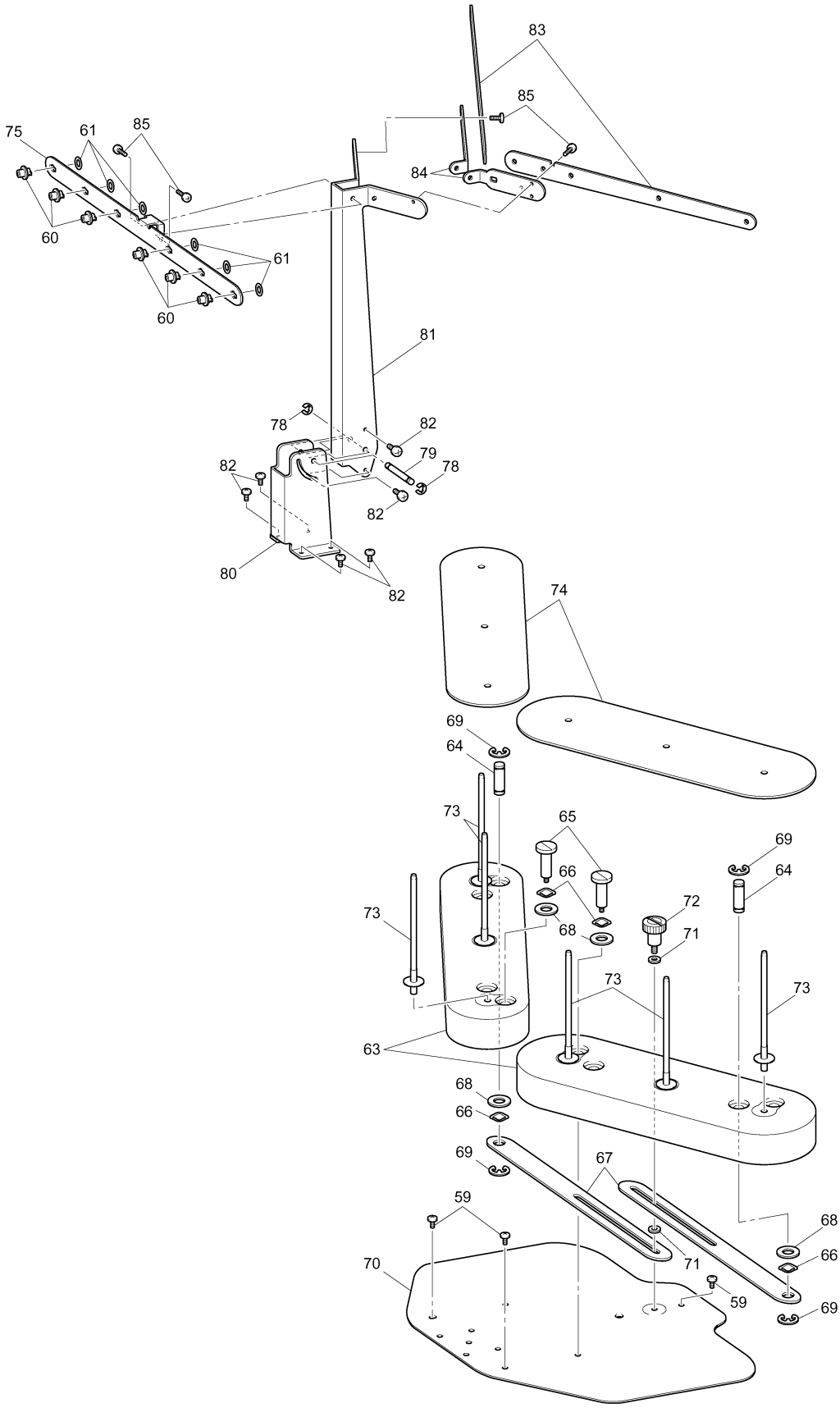

(13) ATTACHMENTS

No.	CODE	NAME	REMARKS
1	XC5954051	TUBULAR FRAME 30X20 ASSY	
2	XC5955051	TUBULAR FRAME 30X20 INNER	
3	XC5956051	TUBULAR FRAME 30X20 OUTER	
4	S32798001	COLLAR	
5	S32799001	NUT, M4	
6	XC5957051	SCREW, M4	
7	S36043000	SPRING, COMPRESSION 5.3X47.7	
8	XC5958051	HOLDER 30X20	
9	062401416	SCREW, PAN M4X14	
10	021400206	NUT, 2 M4	
11	X60224051	BAG,350X700H	
12	XC5959051	TUBULAR FRAME 18X13 ASSY	
13	XC5960051	TUBULAR FRAME 18X13 INNER	
14	XC5961051	TUBULAR FRAME 18X13 OUTER	
15	XC5963051	HOLDER 18X13	
16	XC5964051	TUBULAR FRAME 10X10 ASSY	
17	XC5965051	TUBULAR FRAME 10X10 INNER	
18	XC5966051	TUBULAR FRAME 10X10 OUTER	
19	XC5968051	HOLDER 10X10	
20	060300516	SCREW, BIND M3X5	
21	025030236	WASHER, PLAIN M 3	
22	XZ0197051	PE BAG,180X470H	
23	XC5969051	TUBULAR FRAME 06X04 ASSY	
24	XC5970051	TUBULAR FRAME 06X04 INNER	
25	XC5971051	TUBULAR FRAME 06X04 OUTER	
26	XC5973051	HOLDER 06X04	
27	XC6482051	ACCESSORY CASE	
28	XC5159051	HEXAGONAL DRIVER,1.5	
29	X59476051	CLEANING BRUSH	
30	S34455000	NET, 160L	
31	XC6542051	PINCETTE	
32	X54243051	SEAM RIPPER	
33	XC6543051	SCREW DRIVER, 2X100	
34	XC1807121	SCISSORS	
35	XC5974151	BOBBIN TENSION GAUGE	
36	XA9940051	TOUCH PEN	
37	XC6545051	Z-TYPE SCREW-DRIVER, +-	
38	XZ0206051	OILER B ASSY	
39	XC1074051	NEEDLE PLATE FIXING METAL	
40	XC6368051	BOBBIN	
41	X60838051	BAG,70X110C	
42	X55468051	SCREW DRIVER S	
43	XC4957051	NEEDLE EXCHANGE TOOL	
44	XC6159051	WRENCH 13X10	

No.	CODE	NAME	REMARKS
45	XD1851051	USB I/F CORE CABLE 3M	
46	XC5704051	EMBROIDERY SHEET 30X20 ASSY	
47	XC5721051	EMBROIDERY SHEET 18X13 ASSY	
48	XC5759051	EMBROIDERY SHEET 10X10 ASSY	
49	XC5761051	EMBROIDERY SHEET 06X04 ASSY	
50	XC5533051	CAP DRIVER ASSY (PR600-2C)	
51	XC7477051	CAP FRAME B (PR600-2C)	
52	XC5566151	SETTING FRAME GAUGE ASSY (PR600-2C)	
53	XC6469001	NEEDLE ASSEMBLY	
54	XC6499151	NEEDLE PLATE COVER	
55	XC7134051	SPOOL FELT	
56	130012054	SPOOL PRESSER A	

(13) ATTACHMENTS

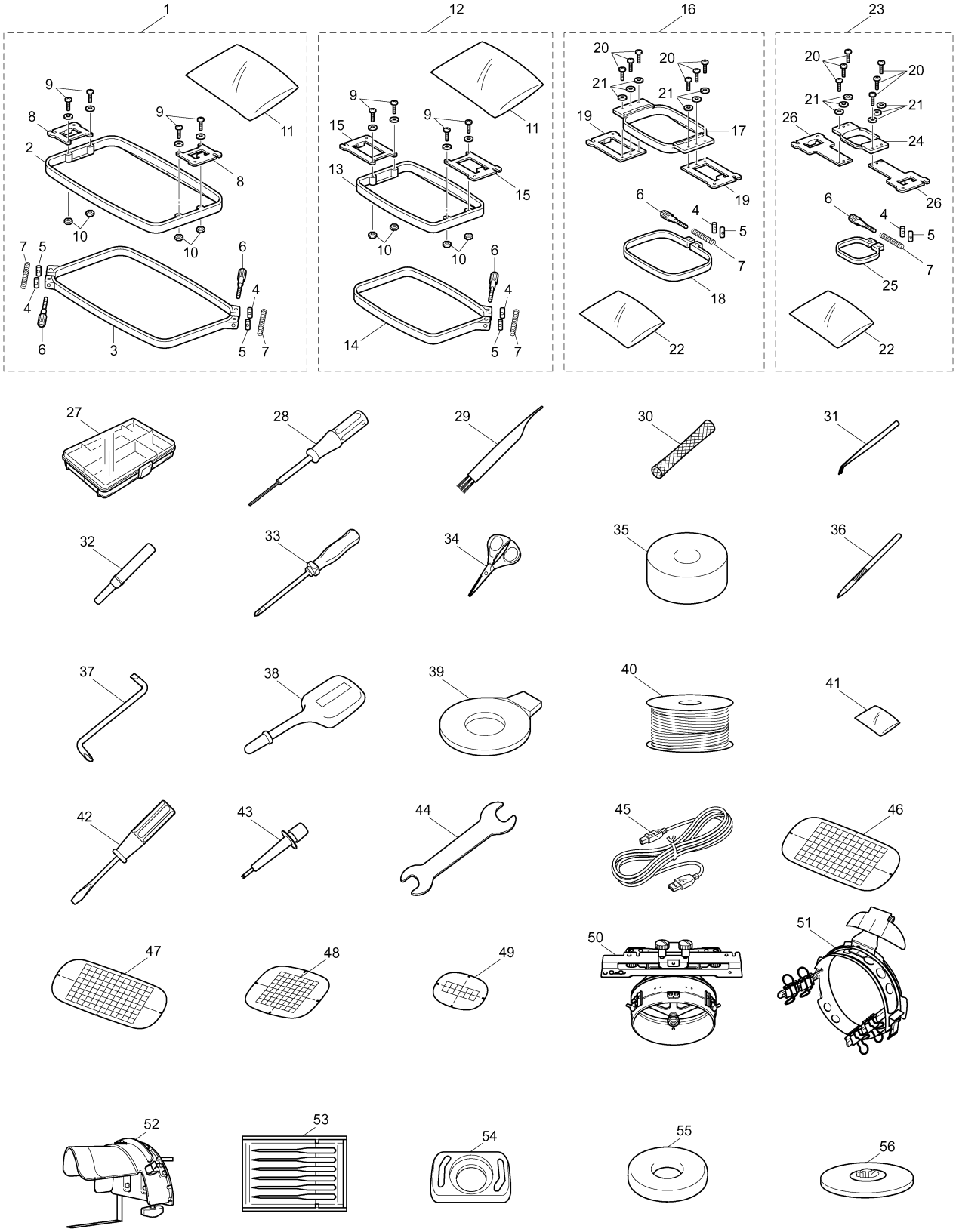

(14) PACKING MATERIALS / PRINTED MATTER

No.	CODE	NAME	REMARKS
		PACKING MATERIALS	
1	XD0688051	CARTON TOP	
2	XC6453051	CARTON BOTTOM ASSY	
3	XC5551150	POLYSTYRENE FOAM PAD R	
4	XC5552150	POLYSTYRENE FOAM PAD L	
5	XC5797050	POLYSTYRENE FOAM PAD BOTTOM	
6	XC5825050	POLYSTYRENE FOAM PAD SIDE	
7	XC6452050	POLYSTYRENE FOAM PAD TOP	
8	XC5848051	JOINT	
9	XC5867050	PAD D	
10	XC6459051	SHEET,1400X2000	
11	S52584001	MERCURY WARNING LABEL 16X92 C2 (U.S.A.)	
12	XC6585150	POLYSTYRENE FOAM PAD FOOT	
13	XC7140050	HOOK SUPPORT SF	
14	X57847051	PLUG LABEL (U.K.)	
15	XC7154050	ANTENNA PROTECT PAD	
16	X60224051	BAG,350X700H	
	XC6557051	C STICKER (PR600-2C)	
	XD0229051	EEU SPEC DESCRIPTION STICKER	
	XD0187051	EEU STICKER	

No.	CODE	NAME	REMARKS
		PRINTED MATTER	
	XD1133051	INSTRUCTION MANUAL.ENGLISH	
	XD1134051	INSTRUCTION MANUAL.GERMANY	
	XD1137051	INSTRUCTION MANUAL.ITALY	
	XD1143051	INSTRUCTION MANUAL.SPANISH	
	XD1135051	INSTRUCTION MANUAL.FRANCE	
	XD1136051	INSTRUCTION MANUAL.NETHERLANDS	
	XC6555051	WARRANTY CARD (U.S.A.)	
	XD0755051	WARRANTY CARD (CANADA)	
	UH3851001	WARRANTY CARD EUR	
	XD1122051	EEU WARRANTY CARD	
	XD0754051	PR-600 QUICK REFERENCE GUIDE	
	XC7251051	INSERTION FOR CAP FRAME	
	XC7670051	INSERTION FOR CAP NOTES	
	XD0256051	INSERTION WEEE	

(14) PACKING MATERIALS / PRINTED MATTER

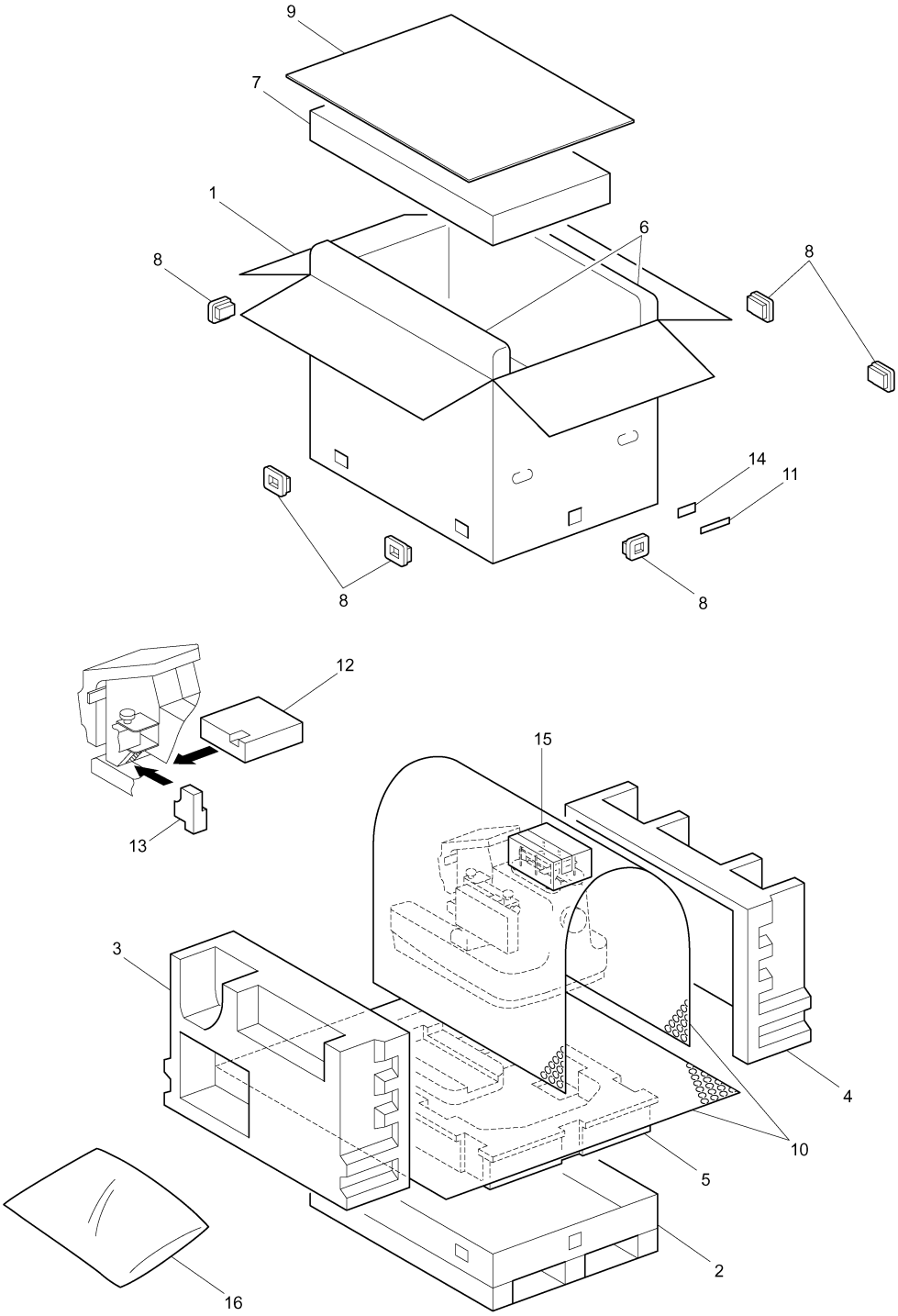

(15) ACCESSORY PARTS

No.	CODE	NAME	REMARKS
BOBBIN WINDER			
(PR600-2C:CHI, GER, FRA, SPA, ITA, EUR, EEU, SIN, AUS)			
1	X59853050	RUBBER CUSHION	
2	XC6602051	BOBBIN WINDER SS BUTTON	
3	XC6611051	BOBBIN WINDER HOLDER UNIT	
4	XC6607051	RUBBER	
5	XC6608051	THREAD GUIDE LEVER	
6	048040346	RETAINING RING, E4	
7	XA9545051	SPRING	
8	XC6633051	BOBBIN WINDER MOTOR COMPLETE	
9	XC6628051	BOBBIN WINDER SHAFT SPRING	
10	060300416	SCREW, BIND M3X4	
11	XC7172051	ASSY,BW SWITCH	
12	XA5876051	BOBBIN BASE ASSY	
13	X80321001	NT LOWER THREAD CUTTER	
14	XA5877051	BOBBIN THREAD CUTTER HOLDER	
15	XC6639051	ASSY:BW PCB	
16	XC6644051	THREAD GUIDE ROD ASSY	
17	XC5949051	SPOOL PIN	
18	XA0679050	SPOOL CUSHION	
19	XC6643051	AC ADAPTER SA-10-2403U (U.S.A, CANADA)	
	XD0318051	AC ADAPTER SUPPLY ASSY EU (EUROPE)	
20	XA0070151	POWER SUPPLY CORD	
	XC9548051	POWER SUPPLY CORD SAA LF (AUS)	
21	XC6630051	BOBBIN WINDER CARTON	
22	100376053	BOBBIN	
23	130012054	SPOOL PRESSER A	
24	XC5720051	BAG,260X440	
25	X57367051	BAG,135X150	
26	XC5974151	BOBBIN TENSION GAUGE	
27	XC6631051	BOBBIN TENSION GAUGE 45G	
	XD0256051	INSERTION WEEE (Except AUS)	
	XD0273051	EEE CARTON LABEL (Except AUS)	

(15) ACCESSORY PARTS

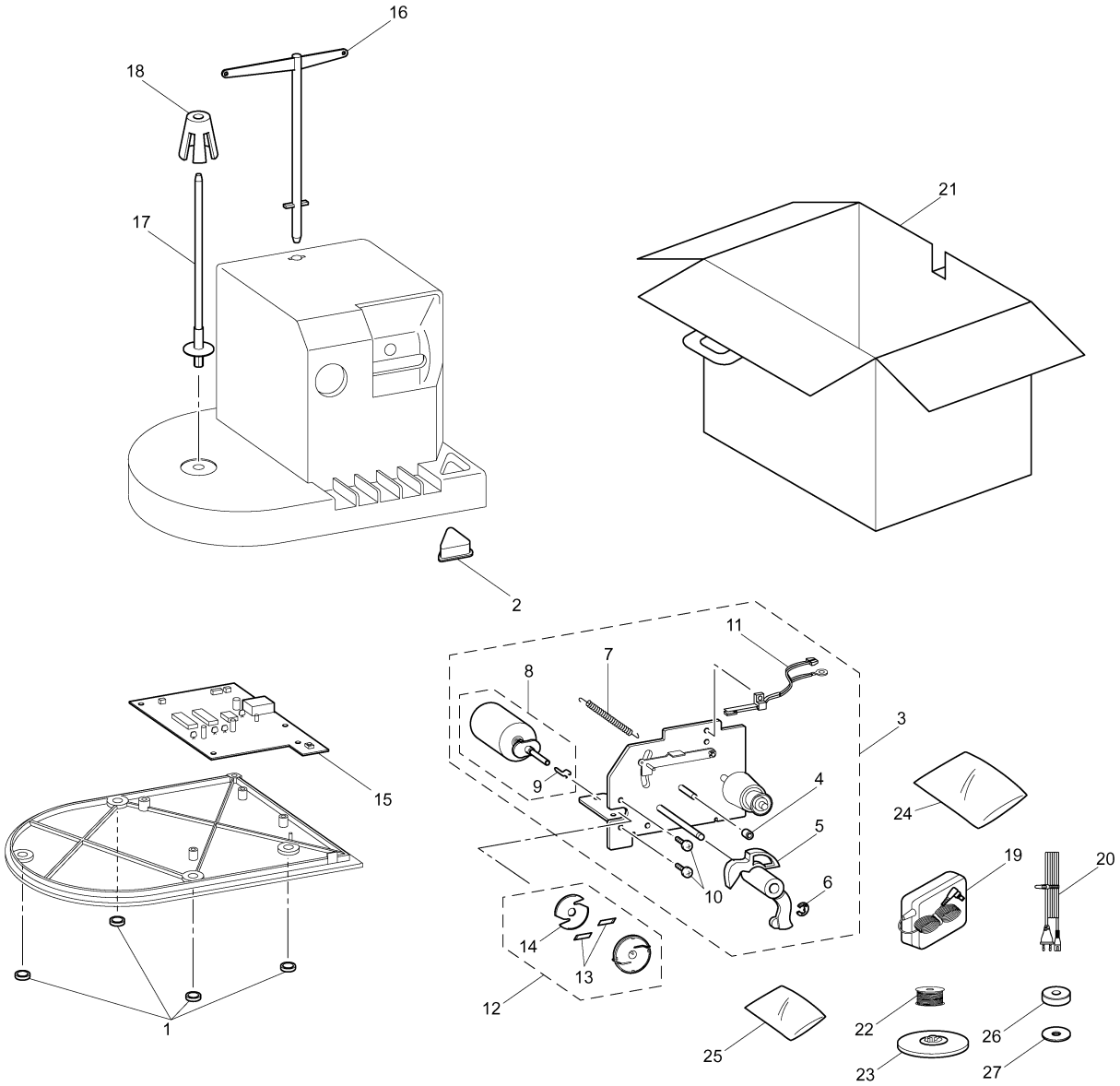

(15) ACCESSORY PARTS

No.	CODE	NAME	REMARKS	No.	CODE	NAME	REMARKS
		CAP DRIVER ASSY					
28	XC5542051	WIRE					
29	060400413	SCREW, BIND M4X4					
30	0A4401003	SCREW, PAN (S/P WASHE) M4X10					
31	XC5546051	ROLLER BASE ASSY					
32	0A5300603	SCREW, PAN (S/P WASHER) M3X6					
33	XC5548051	GUIDE PLATE					
34	XC5550051	SHEET					
35	XC5553051	THUMB BOLT M4 L					
36	XC5817051	SCREW, KNOB M4S					
37	XC5574051	STOPPER					
		STANDARD CAP FRAME					
38	048050346	RETAINING RING, E5					
39	XC5561051	FRAME COVER					
40	XC5562051	RUBBER					
41	060300516	SCREW, BIND M3X5					
42	S32897000	SNAP LOCK					
43	048025346	RETAINING RING, E2.5					
44	XC6974051	HOLD TAPE					
		ADVANCED CAP FRAME					
45	XC7485051	PIN					
46	021400203	NUT, 2 M4					
47	XC7484051	HINGE					
48	048050346	RETAINING RING, E5					
49	XC7486051	FRAME COVER B					
50	S32897000	SNAP LOCK					
51	048025346	RETAINING RING, E2.5					
52	S39460100	BINDER CLIP					
53	060300513	SCREW, BIND M3X5					
54	026030233	WASHER, PLAIN M 3					
55	028030243	WASHER, SPRING 2-3					
		HOPPING JIG					
56	0A5400605	SCREW, PAN (S/P WASHER) M4X6					
57	0A5300806	SCREW, PAN (S/P WASHER) M3X8					
58	XC7235051	ROLLER BASE B ASSY					
59	XC5576051	WASHER					
60	XC5577051	THUMB BOLT M6					
61	004261216	SCREW, FLAT (M2.6)X12					
62	XC6227051	FRAME COVER STOPPER					
63	062400616	SCREW, PAN M4X6					
64	XC7150051	SHEET					
65	XC8943051	CAP FRAME USER'S GUIDE, ENG					

(15) ACCESSORY PARTS

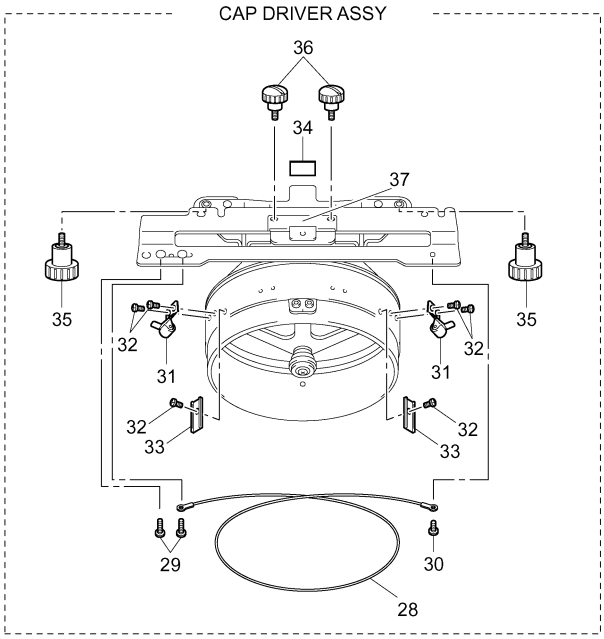

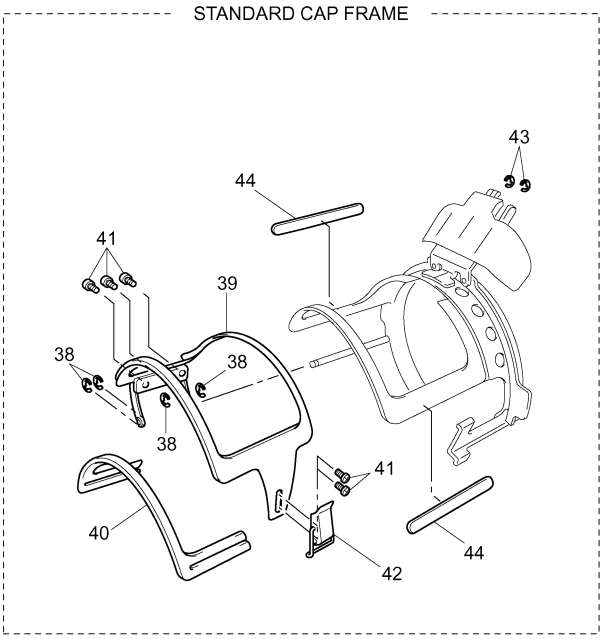

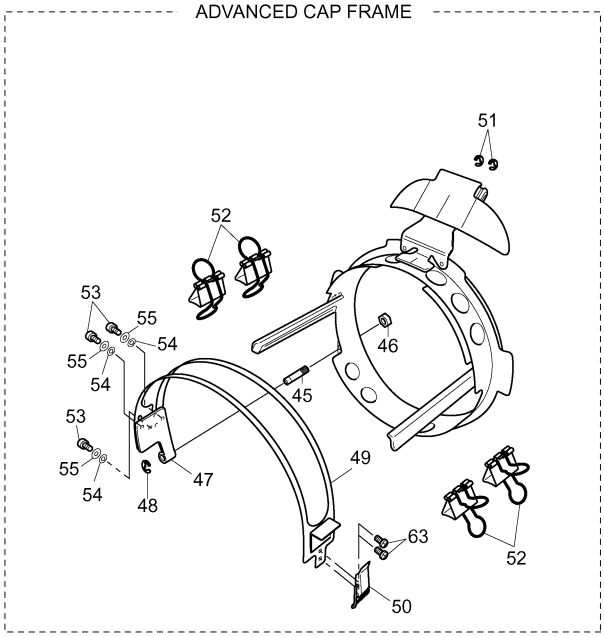

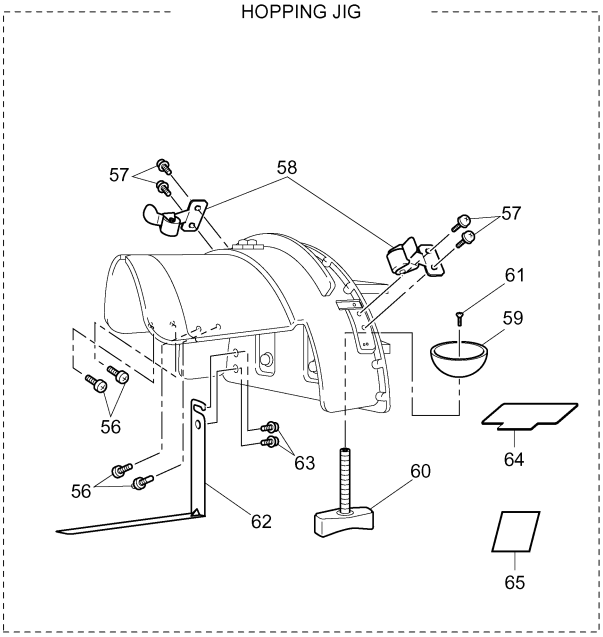

PR600-2
PR600-2C
00000000000000